YAMAHA

WaveRunner

VX Sport
VX1100 (F2N)
VX Cruiser
VX1100A (F2N)
VX Deluxe
VX1100B (F2N)

SERVICE MANUAL

LIT-18616-03-22

F2N-28197-1M-11

Preface

This manual has been prepared by Yamaha primarily for use by Yamaha dealers and their trained mechanics when performing maintenance procedures and repairs to Yamaha equipment. It has been written to suit the needs of persons who have a basic understanding of the mechanical and electrical concepts and procedures inherent in the work, for without such knowledge attempted repairs or service to the equipment could render it unsafe or unfit for use.

Because Yamaha has a policy of continuously improving its products, models may differ in detail from the descriptions and illustrations given in this publication. Use only the latest edition of this manual. Authorized Yamaha dealers are notified periodically of modifications and significant changes in specifications and procedures, and these are incorporated in successive editions of this manual. Also, up-to-date parts information is available on YPEC-web. Additional information and up-to-date information on Yamaha products and services are available on Yamaha Service Portal.

Important information

Particularly important information is distinguished in this manual by the following notations:

⚠ The Safety Alert Symbol means ATTENTION! BECOME ALERT! YOUR SAFETY IS INVOLVED!

⚠ WARNING

A WARNING indicates a hazardous situation which, if not avoided, could result in death or serious injury.

NOTICE

A NOTICE indicates special precautions that must be taken to avoid damages to the watercraft or other property.

TIP:

A TIP provides key information to make procedures easier or clearer.

WaveRunner
VX Sport, VX Cruiser, VX Deluxe
SERVICE MANUAL

1st Edition, January 2010

Printed in U.S.A.
LIT-18616-03-22

Contents

General information

⚠Safety while working

To prevent an accident or injury and to provide quality service, observe the following safety procedures.

Rotating part

- Hands, feet, hair, jewelry, clothing, personal flotation device straps, and so on, can become entangled with internal rotating parts of the engine or jet pump unit, resulting in serious injury or death.
- Keep hands, feet, hair, jewelry, clothing, personal flotation device straps, and so on, away from any exposed moving parts when operating the engine with the seat removed.
- Keep away from intake grate while engine is on. Items such as hair, clothing, or personal flotation device straps can become entangled in moving parts resulting in severe injury.

Hot part

During and after operation, engine parts are hot enough to cause burns. Do not touch any parts in the engine compartment until the engine has cooled.

Electric shock

Do not touch any electrical parts while starting or operating the engine. Otherwise, shock or electrocution could result.

Impeller

Do not hold the impeller with your hands when loosening or tightening the impeller.

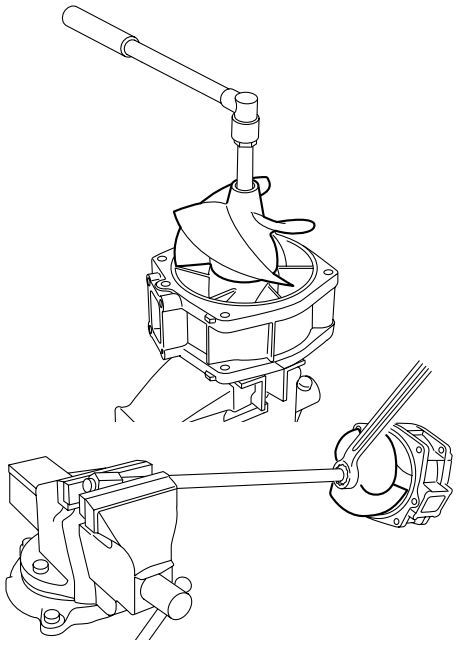

Handling of gasoline

- Gasoline is highly flammable. Keep gasoline and all flammable products away from heat, sparks, and open flames.
- Gasoline is poisonous and can cause injury or death. Handle gasoline with care. Never siphon gasoline by mouth. If you swallow some gasoline, inhale a lot of gasoline vapor, or get some gasoline in your eyes, see your doctor immediately. If gasoline spills on your skin, wash with soap and water. If gasoline spills on your clothing, change your clothes.

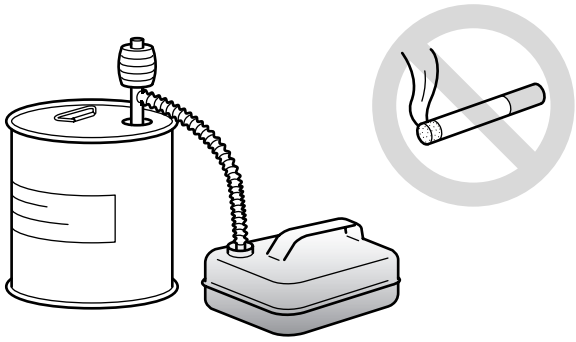

Ventilation

- Gasoline vapor and exhaust gas are heavier than air and extremely poisonous. If gasoline vapor or exhaust gas is inhaled in large quantities, it may cause loss of consciousness and death within a short time.
- When test running an engine indoors (for example, in a water tank) make sure to do so where adequate ventilation can be maintained.

Self-protection

- Protect your eyes by wearing safety glasses or safety goggles during all operations involving drilling and grinding, or when using an air compressor.
- Protect your hands and feet by wearing protective gloves and safety shoes when necessary.

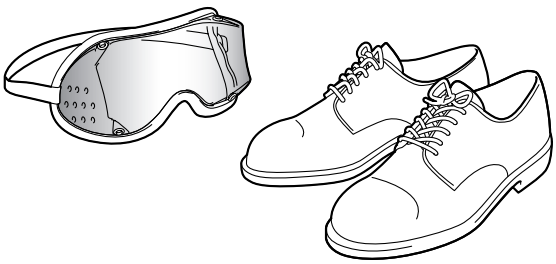

Working with crane

- When moving the watercraft, or when lifting the engine during removal or installation, make sure to use a crane with a lifting capacity that is equal to or more than the weight of the watercraft or engine respectively.
- When lifting the watercraft, use the watercraft lift harness and make sure that the watercraft is in a stable position when moving it.
- Use the wire ropes of adequate strength, and lift up the engine unit using the three point suspension.
- If the engine unit does not have three or more points to be suspended, support it using additional ropes or the like so that the engine unit can be lifted and carried in a stable manner.

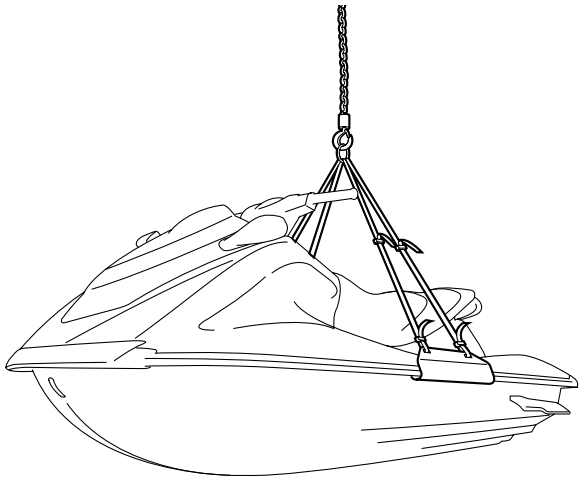

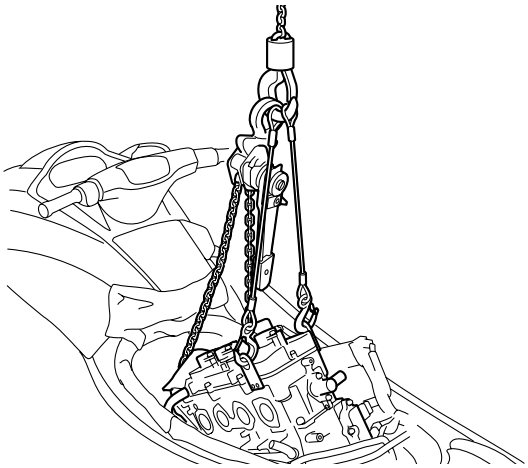

Handling of heat gun

- Improper handling of a heat gun may result in burns. For information on the proper handling of the heat gun, see the operation manual issued by the manufacturer.
- When using a heat gun, keep it away from the gasoline and oil, to prevent a fire.
- Components become hot enough to cause burns. Do not touch any hot components directly.

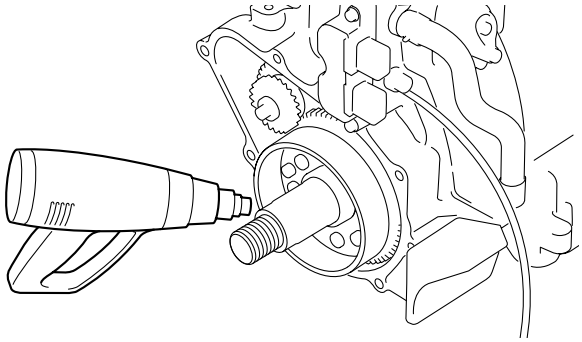

Part, lubricant, and sealant

Use only genuine Yamaha parts, lubricants, and sealants, or those recommended by Yamaha, when servicing or repairing the watercraft.

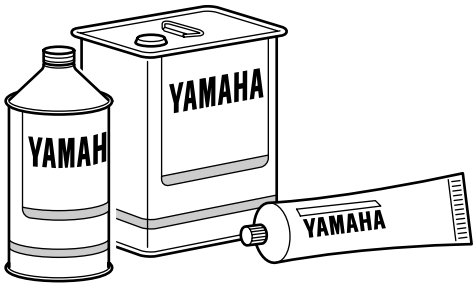

Handling of sealant

- Wear protective gloves to protect your skin, when using the sealants.
- See the material safety data sheet issued by the manufacturer. Some of the sealants may be harmful to human health.

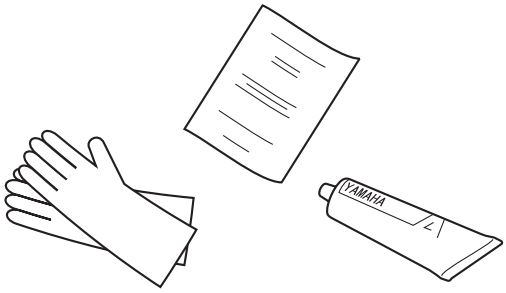

Special service tool

Use the recommended special service tools to work safely, and to protect parts from damage.

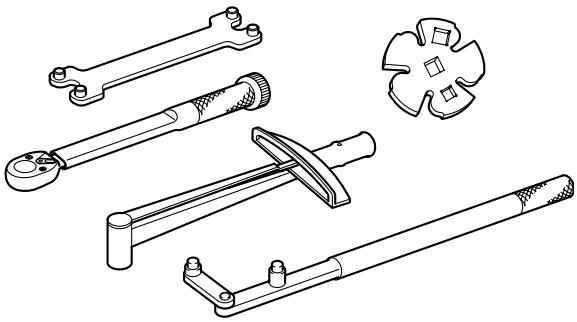

Tightening torque

Follow the tightening torque specifications provided throughout the manual. When tightening nuts, bolts, and screws, tighten the large sizes first, and tighten fasteners starting in the center and moving outward.

Non-reusable part

Always use new gaskets, seals, O-rings, cotter pins, and so on, when installing or assembling parts.

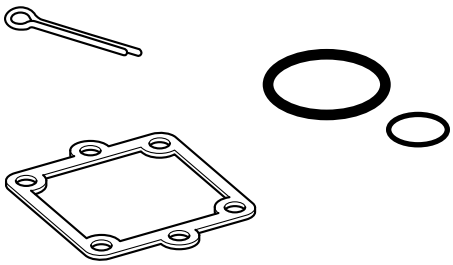

Disassembly and assembly

- Use compressed air to remove dust and dirt during disassembly.
- Apply engine oil to the contact surfaces of moving parts before assembly.

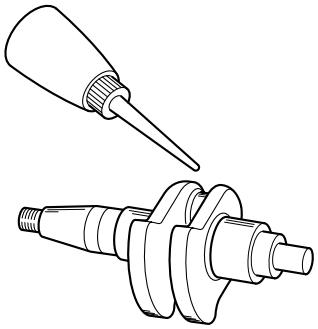

- Install bearings so that the bearing identification mark is facing in the direction indicated in the installation procedure. In addition, make sure to lubricate the bearings liberally.
- Apply a thin coat of water resistant grease to the lip and periphery of an oil seal before installation.
- Check that moving parts operate normally after assembly.

How to use this manual

Manual format

The format of this manual has been designed to make service procedures clear and easy to understand. Use the information below as a guide for effective and quality service.

- Parts are shown and detailed in an exploded diagram and are listed in the component list (see ① in the following figure for an example page).
- The component list consists of part names and quantities, as well as bolt and screw dimensions (see ② in the following figure). To assemble or install the components, reverse the steps indicated in the component list.
- Symbols are used to indicate important aspects of a procedure, such as the grade of lubricant and the lubrication point (see ③ in the following figure).
- Tightening torque specifications are provided in the exploded diagrams (see ④ in the following figure), and in the related detailed instructions. Some torque specifications are listed in stages as torque figures or angles in degrees.
- Separate procedures and illustrations are used to explain the details of removal, checking, and installation where necessary (see ⑤ in the following figure for an example page).

TIP:

For troubleshooting procedures, see Chapter 9, “Troubleshooting.”

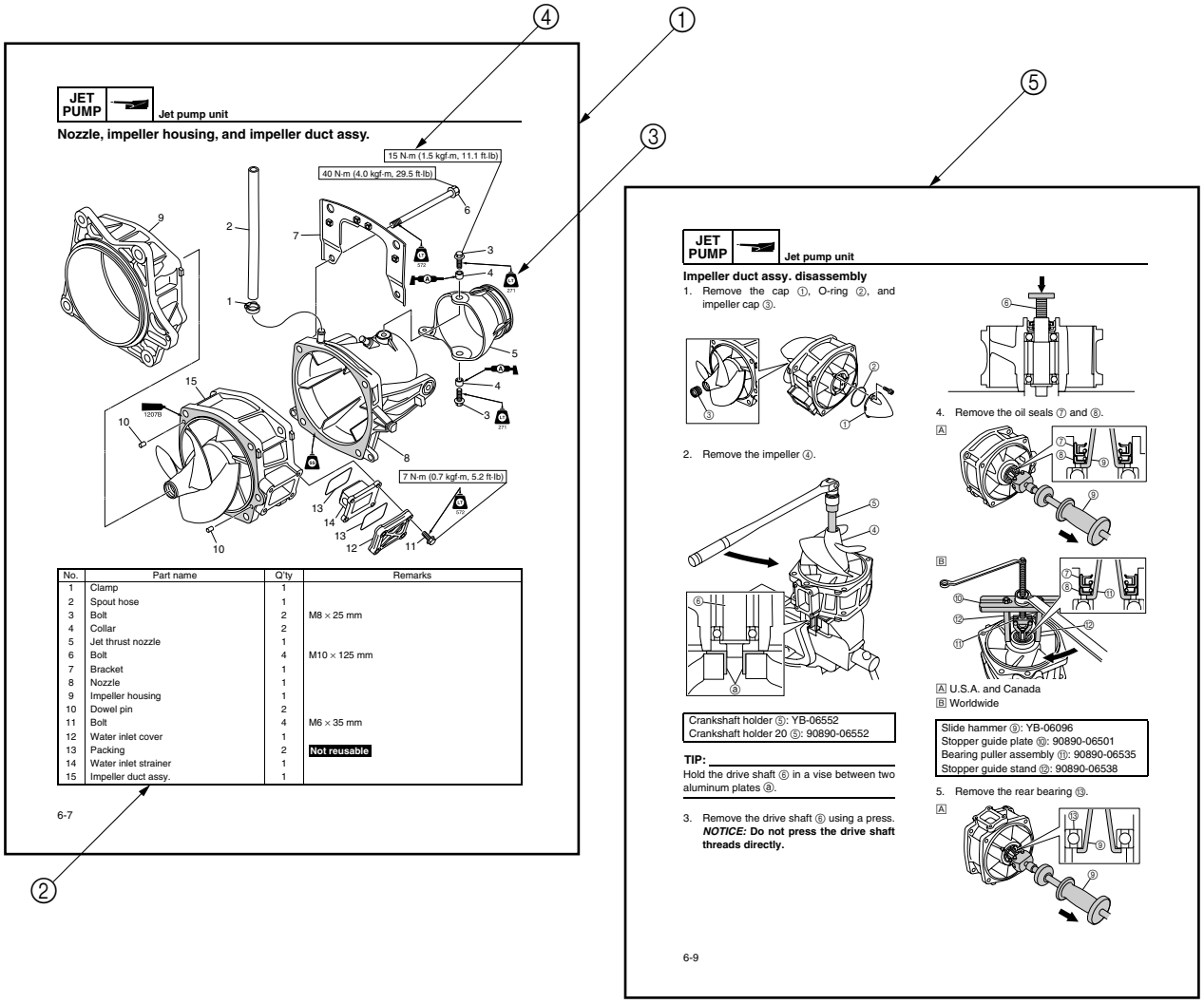

No.	Part name	Q'ty	Remarks
1	Clamp	1	
2	Spout hose	1	
3	Bolt	2	M8 × 25 mm
4	Collar	2	
5	Jet thrust nozzle	1	
6	Bolt	4	M10 × 125 mm
7	Bracket	1	
8	Nozzle	1	
9	Impeller housing	1	
10	Dowel pin	2	
11	Bolt	4	M6 × 35 mm
12	Water inlet cover	1	
13	Packing	2	Not reusable
14	Water inlet strainer	1	
15	Impeller duct assy.	1	

Abbreviation

The following abbreviations are used in this service manual.

Abbreviation	Description
API	American Petroleum Institute
APS	Accelerator position sensor
BOW	Bow end
ECM	Electronic Control Module
ETV	Electronic throttle valve
EX	Exhaust
IN	Intake
OL	Overload
OTS	Off-throttle steering system
PON	Pump Octane Number = (Motor Octane Number + Research Octane Number)/2
PORT	Port side
RON	Research Octane Number
RPM	Revolutions Per Minute
SAE	Society of Automotive Engineers
STBD	Starboard side
STERN	Stern end
TCI	Transistor Controlled Ignition
TDC	Top Dead Center
TPS	Throttle Position Sensor
UP	Upside
YDIS	Yamaha Diagnostic System

Adhesive, lubricant, sealant, and thread locking agent

Symbol

Symbols in an exploded diagram or illustration indicate the grade of lubricant and the lubrication points.

Symbol	Name	Application
E	Yamaha 4-stroke motor oil	Lubricant
A	Water resistant grease (Yamaha grease A)	Lubricant
M	Molybdenum disulfide grease	Lubricant
EP	Epnoc grease AP#0	Lubricant
SG	Silicone grease	Lubricant

Symbols in an exploded diagram or illustration indicate the type of adhesive, sealant, or thread locking agent and the application points.

Symbol	Name	Application
1280B	ThreeBond 1280B	Sealant
LT 271	LOCTITE 271 (red)	Thread locking agent
LT 242	LOCTITE 242 (blue)	Thread locking agent
LT 572	LOCTITE 572 (white)	Sealant
SS	Silicone sealant	Sealant
1530D	ThreeBond 1530D	Adhesive
1207B	ThreeBond 1207B	Sealant

Special service tool

For U.S.A. and Canada

Special service tools with part numbers “YB-*****” are distributed by K & L.

Special service tools with Yamaha part numbers (90890-*****) are distributed by the Parts Division.

Compression gauge extension M10
90890-06582

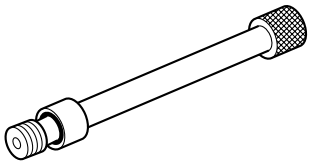

Compression gauge
YU-33223

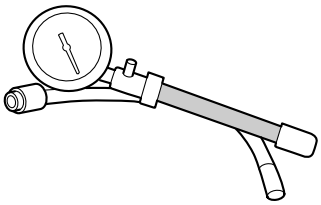

90890-03160

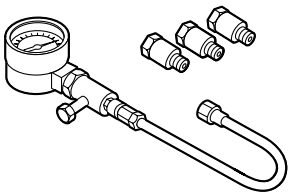

Camshaft wrench
90890-06724

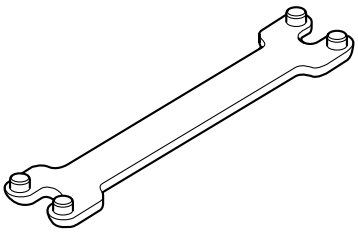

Dial gauge stand 173
90890-06583

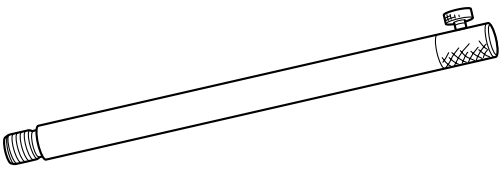

Dial gauge stand set
YB-06585

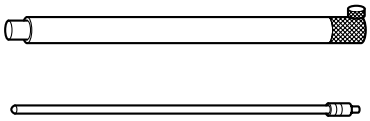

Dial indicator gauge 0–5 mm
YU-03097

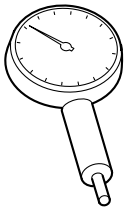

Dial gauge set
90890-01252

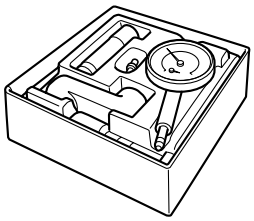

Dial gauge needle 173
90890-06584

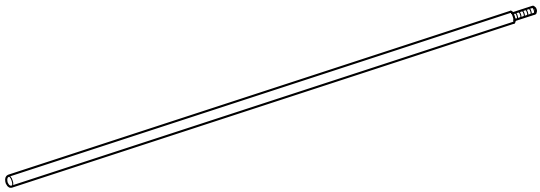

Oil filter wrench
YB-01426
Oil filter wrench 64
90890-01426

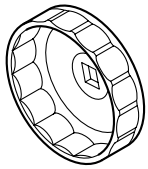

Fuel pressure gauge adapter
YW-06842
90890-06842

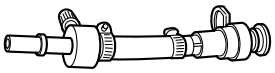

Fuel pressure gauge
YB-06766

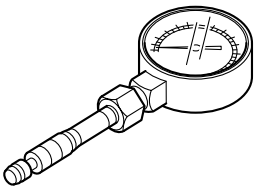

Fuel pressure gauge
90890-06786

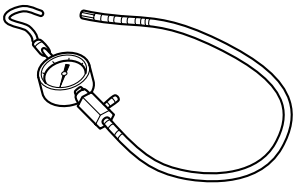

Leakage tester
90890-06840

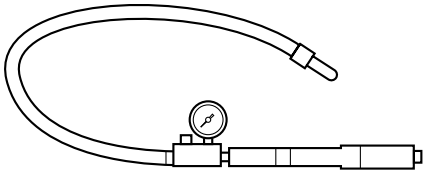

Flywheel magneto holder
YB-06139

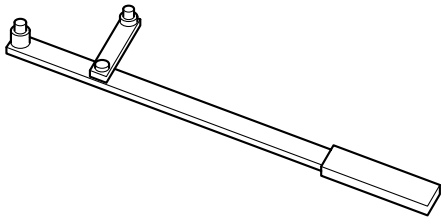

Flywheel holder
90890-06522

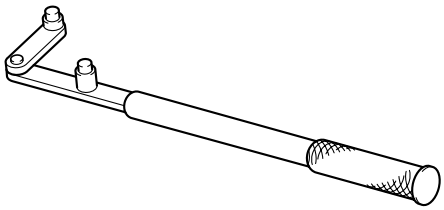

Coupler wrench
YW-06551

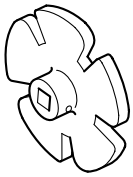

90890-06551

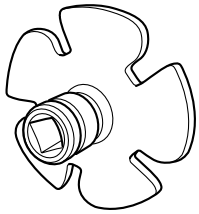

Driver handle (large)
YB-06071

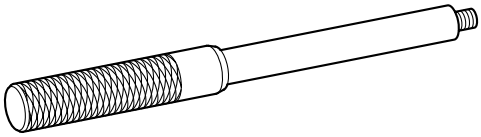

Bearing housing needle bearing installer
YB-06111

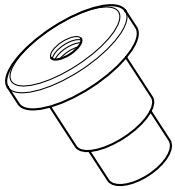

Driver rod L3
90890-06652

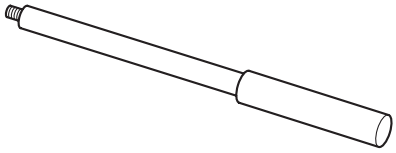

Needle bearing attachment
90890-06653

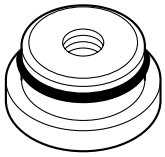

Slide hammer
YB-06096

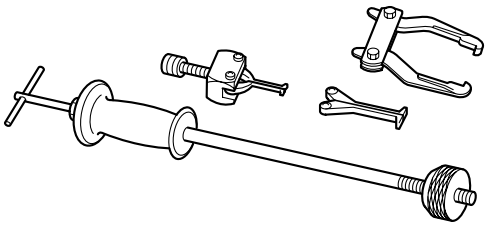

Bearing puller legs
YB-06523

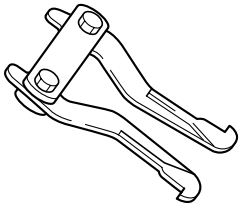

Stopper guide plate
90890-06501

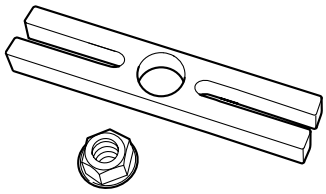

Bearing puller assembly
90890-06535

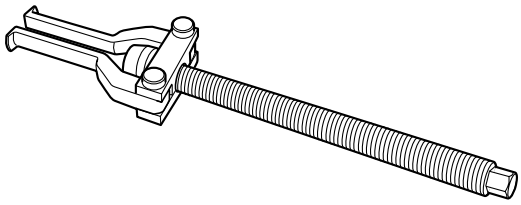

Bearing puller claw 1
90890-06536

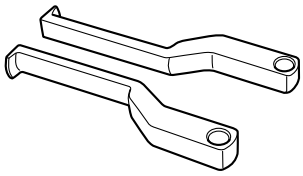

Stopper guide stand
90890-06538

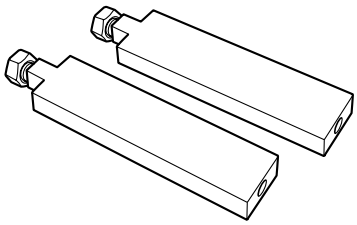

Oil seal installer
YB-06085

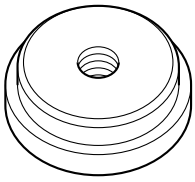

Driver rod LS
90890-06606

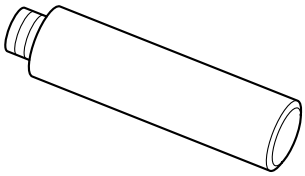

Ball bearing attachment
90890-06631

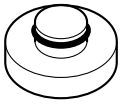

Bearing outer race attachment
90890-06624

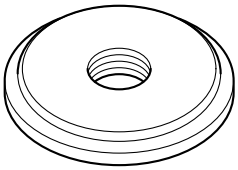

Forward gear bearing cup installer
YB-06199-A

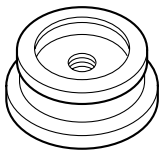

Ball bearing attachment
90890-06657

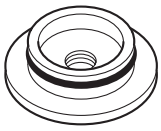

Valve spring compressor
YM-04019
90890-04019

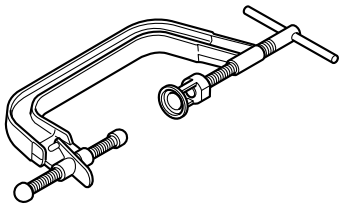

Compressor adapter
YM-04114
YM-04108
Valve spring compressor attachment
90890-04114
90890-04108

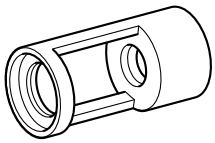

Valve guide driver
YM-04111
YM-04116
Valve guide remover 4.0
90890-04111
Valve guide remover 4.5
90890-04116

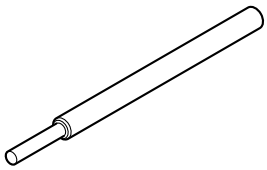

Valve guide reamer
YM-04113
YM-04118

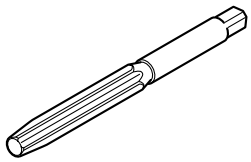

Valve guide reamer 4.0
90890-04113
Valve guide reamer 4.5
90890-04118

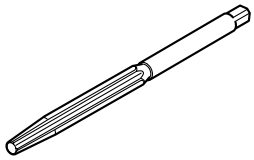

Valve seat cutter holder ø4.0
90890-06811
Valve seat cutter holder ø4.5
90890-06812

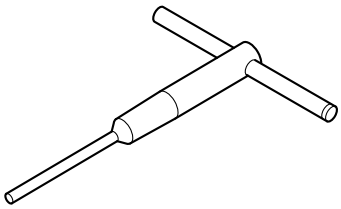

Valve seat cutter
Intake
90890-06815 (30°)
90890-06814 (45°)
90890-06813 (60°)
Exhaust
90890-06328 (30°)
90890-06312 (45°)
90890-06315 (60°)

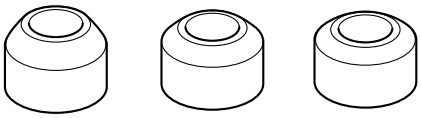

Neway valve seat kit
YB-91044

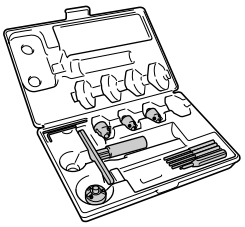

Primary sheave holder
YS-01880-A
Sheave holder
90890-01701

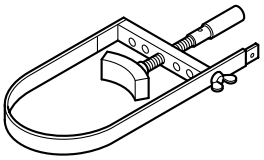

Rotor puller
90890-01080

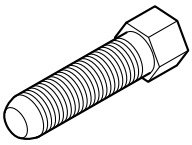

Piston ring compressor
YM-08037

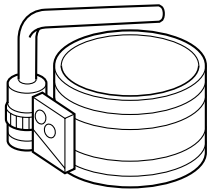

90890-05158

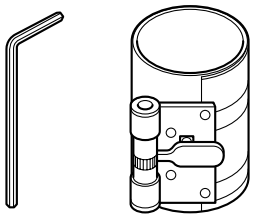

Crankshaft holder
YB-06552
Crankshaft holder 20
90890-06552

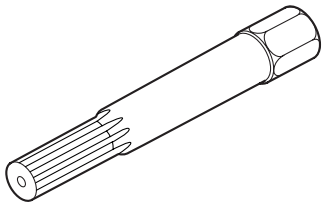

Bearing housing bearing remover
YB-06112

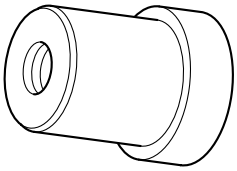

Needle bearing attachment
90890-06614

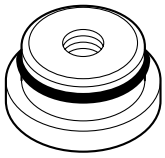

Bearing cup installer
YB-06167

Bearing outer race attachment
90890-06628

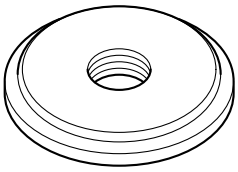

Driveshaft holder
YB-06151
Drive shaft holder 5
90890-06519

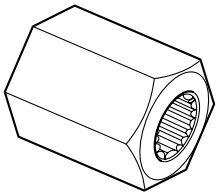

YDIS (KIT)
60V-85300-04

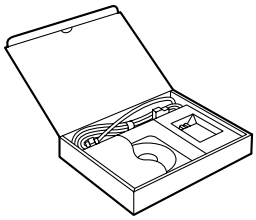

YDIS (CD-ROM, Ver. 1.30)
60V-WS853-04
YDIS (CD-ROM, Ver. 1.32)
60V-WS853-05

Digital multimeter
YU-34899-A

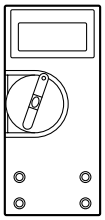

Peak volt adapter
YU-39991

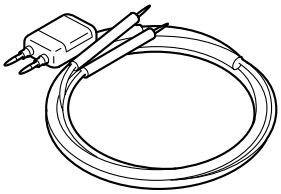

Digital circuit tester
90890-03174

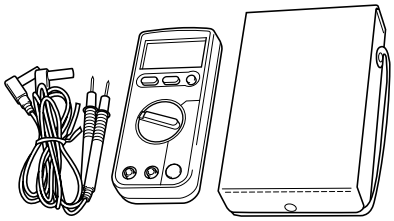

Peak voltage adapter B
90890-03172

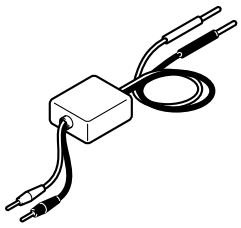

Test harness (2 pins)
YB-06867
Test harness FWY-2 (2 pins)
90890-06867

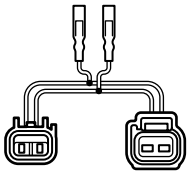

Spark checker
YM-34487
Ignition tester (Spark gap tester)
90890-06754

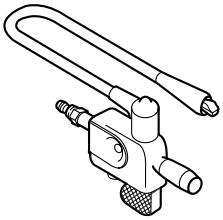

Test harness (3 pins)
YB-06877
Test harness HM090-3 (3 pins)
90890-06877

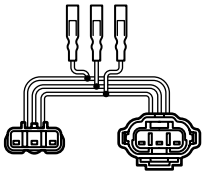

Test harness (3 pins)
YB-06870
Test harness SMT250-3 (3 pins)
90890-06870

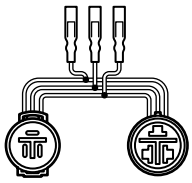

Test harness (6 pins)
YB-06790
Test harness FSW-6 (6 pins)
90890-06790

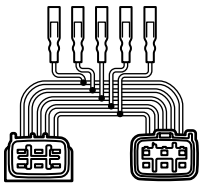

Model feature

General feature

- The F2N features a newly designed deck and the hull is similar to the hull for the F1K/F2L models.
- The F2N is equipped with the 6BU engine, which is based on the 6D3 engine and has newly designed installation positions for the electrical components.

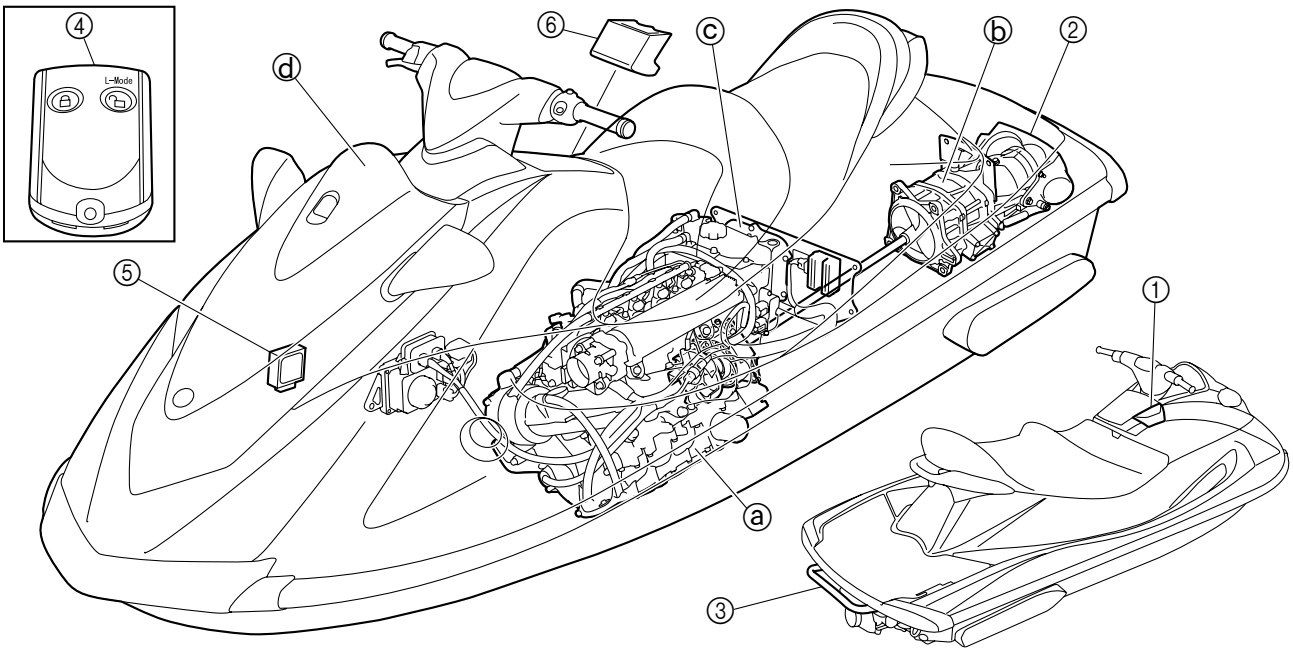

ⓐ Power unit

- 4-stroke, L4, DOHC, 20-valve, 1052.0 cm^3 engine with electronic fuel injection
- Single throttle body
- 4-in-1 exhaust system
- Dry sump lubrication

ⓑ Jet pump

- Stainless steel, 3-blade, ø155 mm, 21.2° pitch impeller
- Impeller turning direction: counterclockwise (when viewed from the stern)
- Aluminum jet thrust nozzle
- Impeller-spline-interlocking-type intermediate drive shaft

ⓒ Electrical

- Electronic control throttle valve system
- In-tank fuel pump module
- Multifunction meter
- L-MODE (VX Cruiser and VX Deluxe)
- Off-throttle steering system (OTS)

ⓓ Deck and hull

- V-shaped hull
- 2 seat types (different shapes according to the model)

Model equipment comparison table

Model	Shift lever ① and reverse gate ②	Reboarding step ③	Remote control transmitter ④ and remote control receiver ⑤	Beverage holder ⑥
VX Sport	—	—	—	—
VX Cruiser	○	○	○	○
VX Deluxe	○	—	○	○

○ : Equipped
— : Not equipped

Identification number

Primary I.D. number

The primary I.D. number is stamped on a label attached to the inside of the engine compartment.

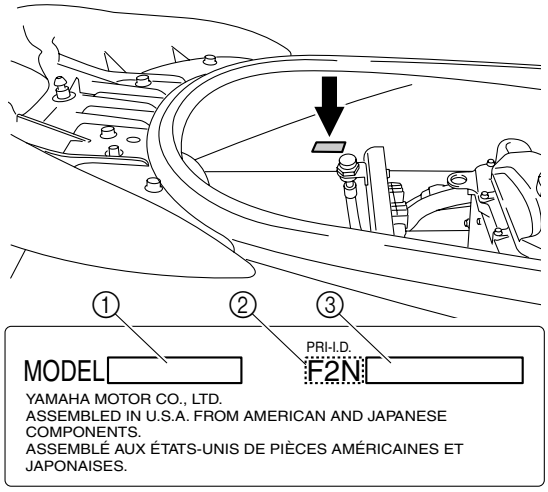

① Model name
② Hull type
③ Primary I.D. number

Starting primary I.D. number: F2N: 800101

Engine serial number

The engine serial number is stamped on a label attached to the engine unit.

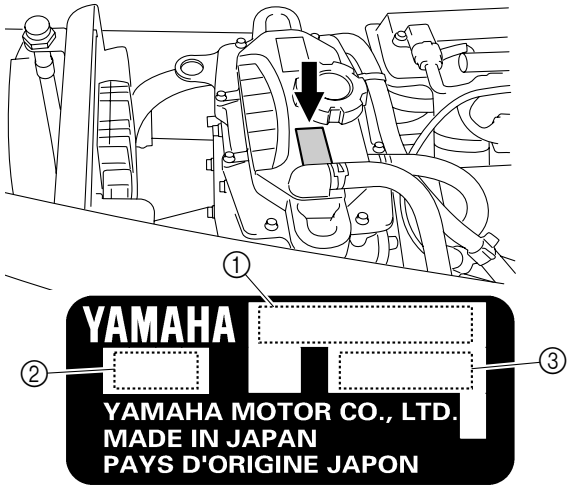

① Engine name
② Engine type
③ Engine serial number

Starting engine serial number: 6BU: 1000001

Jet pump unit serial number

The jet pump unit serial number is stamped on a label attached to the intermediate housing.

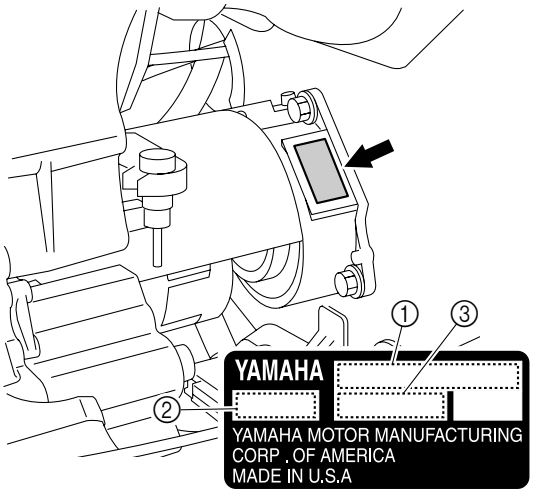

① Jet pump unit name
② Jet pump unit type
③ Jet pump unit serial number

Hull identification number (H.I.N.)

The H.I.N. is stamped on a plate attached to the boarding platform.

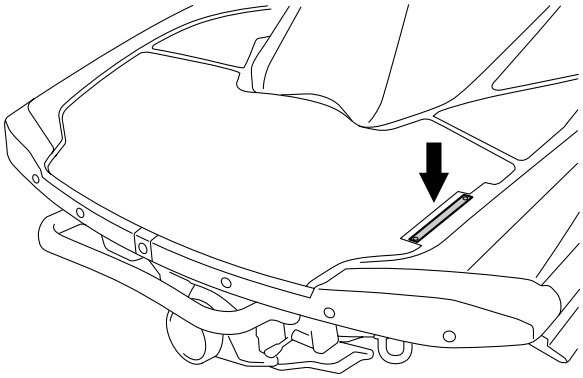

US-YAM□□□□□□□□□□

Deck and hull

The following changes have been made to the F2N from the F2L (previous model):

- The installation positions for the mirror and shift lever
- The capacity of the glove compartment
- Fuel filler cap mechanism
- The shapes of the sponsons

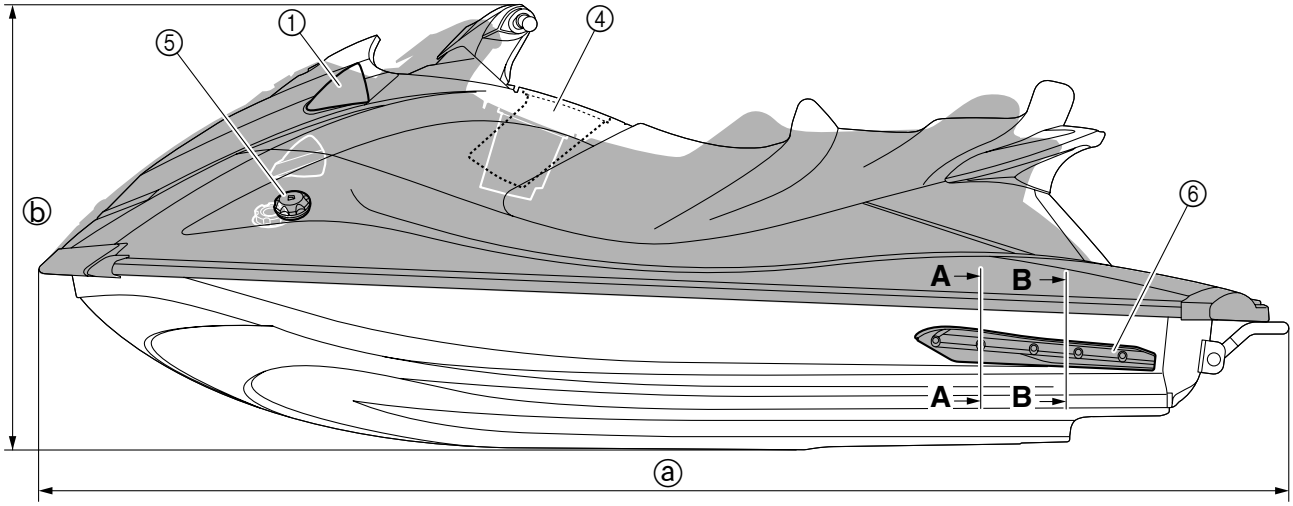

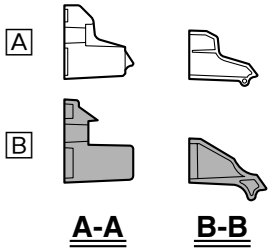

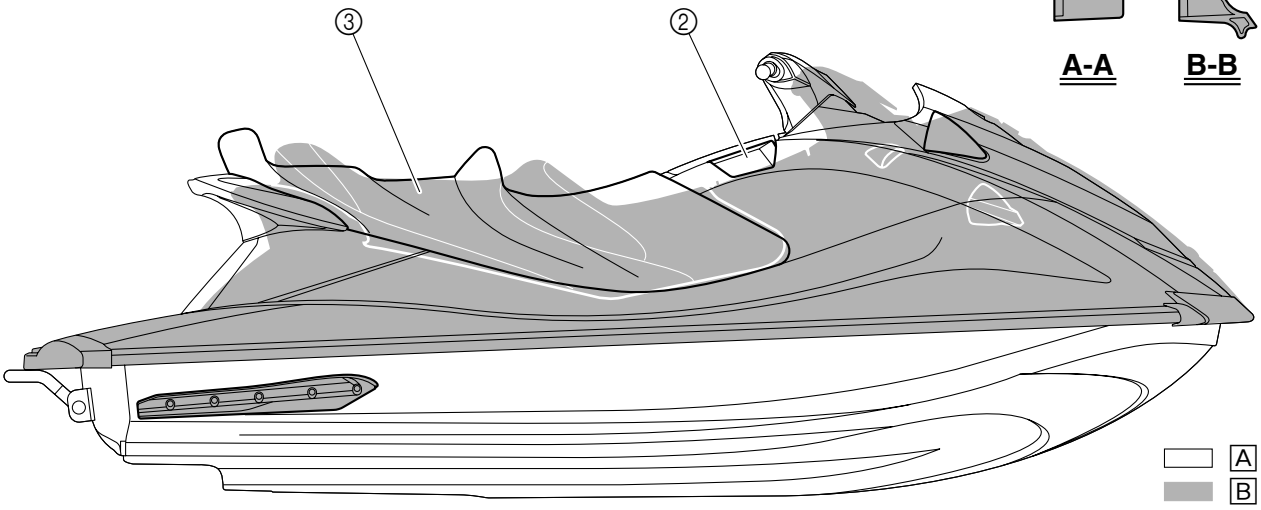

① Mirror
② Shift lever
③ Seat
④ Glove compartment
⑤ Fuel filler cap
⑥ Sponson

A F2N (VX Cruiser)
B F2L (VX Cruiser)

Model	ⓐ Length (mm)	ⓑ Height (mm)	Dry weight (kg)	Glove compartment capacity (L)
F2N (VX Cruiser)	3270	1160	340	7.0
F2L (VX Cruiser)	3270	1150	325	5.2

Intermediate drive shaft

For the F2N, the intermediate drive shaft has been changed compared to the F1W and interlocks with the impeller using splines. As a result, the intermediate drive shaft remains installed to the intermediate housing when the jet pump is removed.

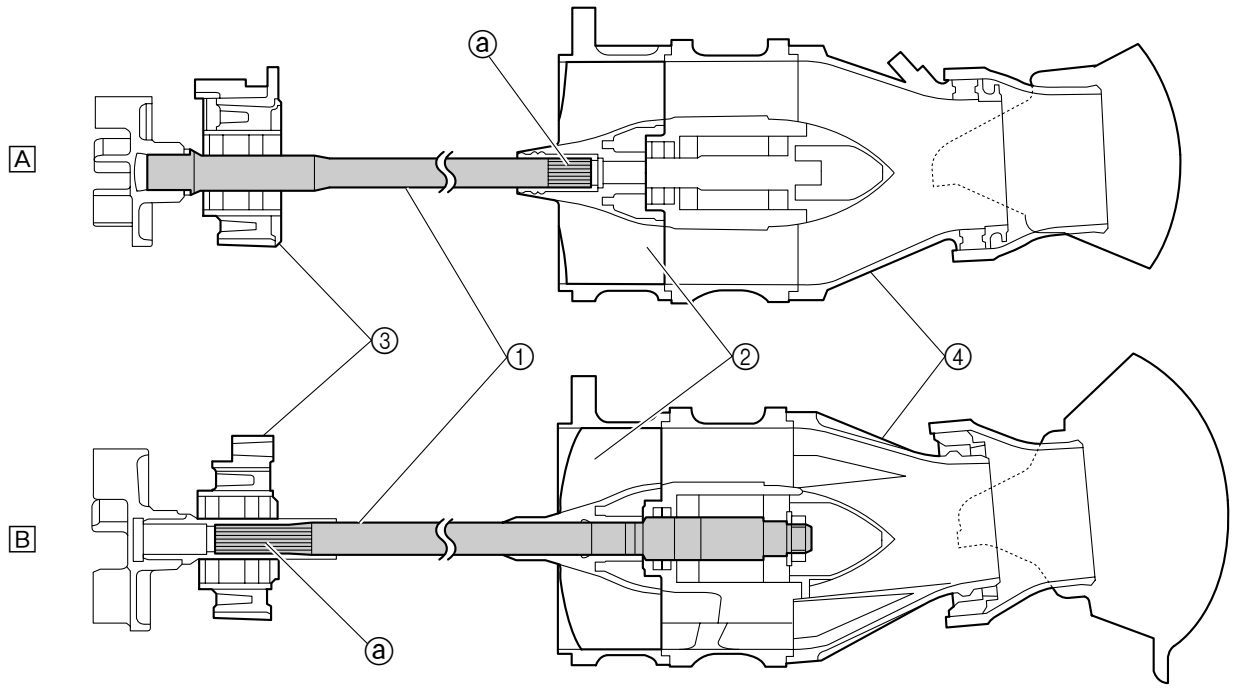

① Intermediate drive shaft
② Impeller
③ Intermediate housing
④ Jet pump

ⓐ Splines

A F2N
B F1W

ECM and rectifier regulator

For the 6BU engine, the installation positions for the ECM and rectifier regulator have been changed compared to the 6D3 engine. For the 6BU engine, a waterproof cover is installed on the ECM. Depending on the market, the 6BU engine uses different ECMs, each with its own map. Therefore, the ECMs are not interchangeable.

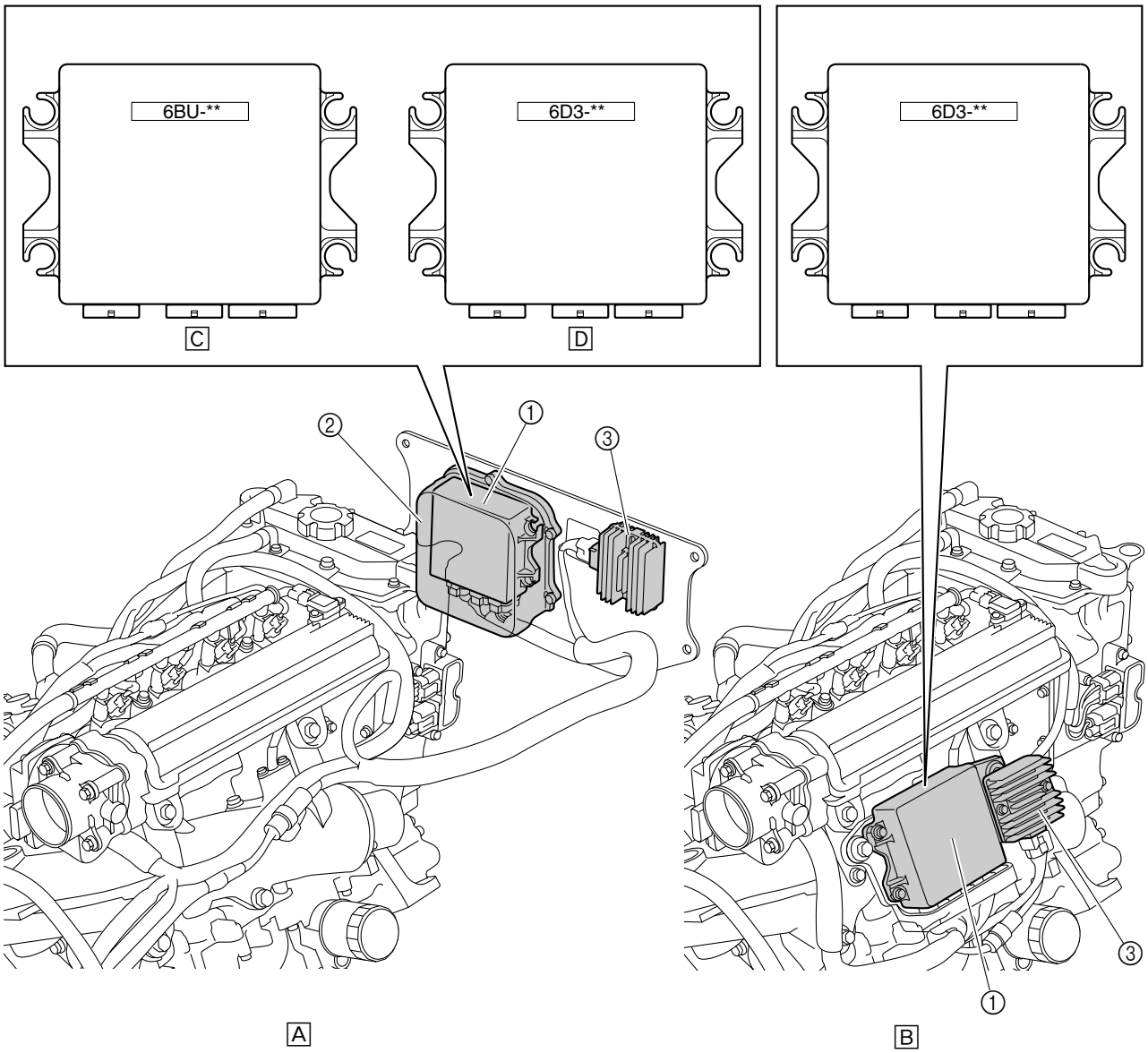

① ECM
② ECM cover
③ Rectifier regulator

A 6BU engine
B 6D3 engine
C U.S.A., Canada, Oceania, and Japan
D Europe

Identification table

Engine	ECM identification	Market
6BU	6BU-**	U.S.A., Canada, Oceania, and Japan
	6D3-**	Europe
6D3	6D3-**	All markets

Multifunction meter unit

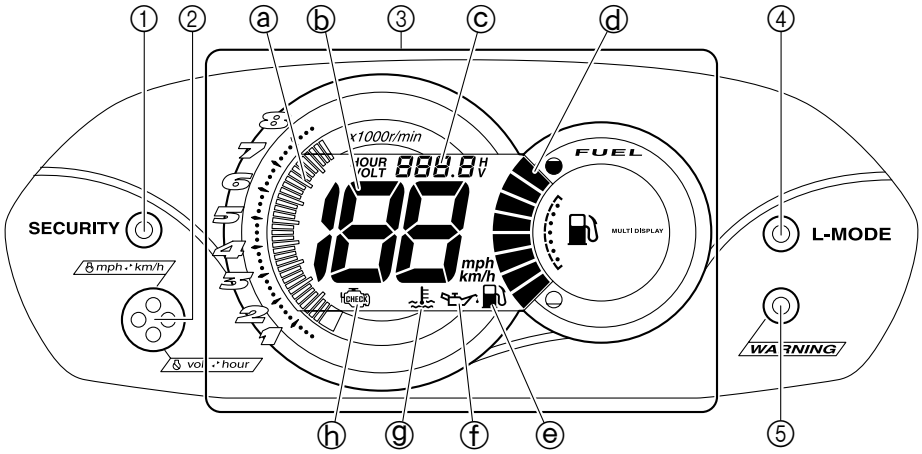

Item	Functions
① “SECURITY” indicator light (*1)	Comes on when the unlock mode of the Yamaha Security System is selected.
② Select button	• Switches the display units to “mph” or “km/h”. (*2) • Switches the display to the hour meter or to the voltmeter. (*3)
③ Information display	Shows watercraft operating conditions. ⓐ Tachometer ⓑ Speedometer ⓒ Hour meter/voltmeter ⓓ Fuel level meter ⓔ Fuel level warning indicator ⓕ Oil pressure warning indicator ⓖ Engine overheat warning indicator ⓗ Check engine warning indicator
④ “L-MODE” indicator light (*1)	Comes on when the L-MODE (low-RPM mode) is selected.
⑤ “WARNING” indicator light	Flashes or comes on, together with each warning indicator in the information display, when a malfunction has occurred.

(*1) VX Cruiser and VX Deluxe
(*2) Within 10 seconds after the multifunction meter unit is activated
(*3) After the multifunction meter unit is activated for more than 10 seconds

Initial operation

When the multifunction meter unit is activated, the buzzer sounds 2 or 3 times, all displays come on for 2 seconds, and then the unit starts to operate normally.

Hour meter/voltmeter (*1)

HOUR 032.5 H	**Hour meter display:** The hour meter shows the hours of engine operation that have elapsed since the watercraft was new.
VOLT 12.1 V	**Voltmeter display:** The voltmeter shows the battery voltage. When the battery voltage is normal, the voltmeter displays approximately 12 volts. If the battery voltage has dropped significantly, “LO” is displayed on the voltmeter. If the battery voltage has risen significantly, “HI” is displayed.
VOLT Lo V	
VOLT HI V	

(*1) Push the select button ② for at least 1 second to switch the display to the hour meter or to the voltmeter.

Multifunction display warning

Warning	Condition	Action	"WARNING" indicator light	Buzzer (*1)
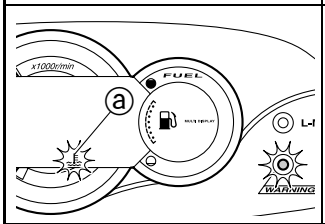	The engine temperature rises above specification.	The engine overheat warning indicator ⓐ flashes 5 times, and then comes on.	Flashes 5 times, and then comes on	Sounds intermittently, and then sounds continuously.
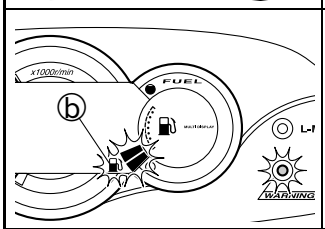	The fuel remaining in the fuel tank drops to about 13 L (*2).	The lowest 2 fuel level segments and the fuel level warning indicator ⓑ flash.	Flashes	Sounds intermittently.
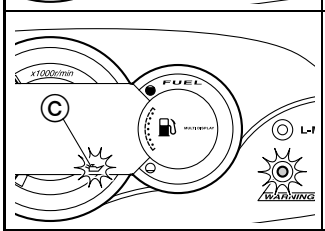	The oil pressure does not rise to specification.	The oil pressure warning indicator ⓒ flashes.	Flashes	Sounds intermittently.
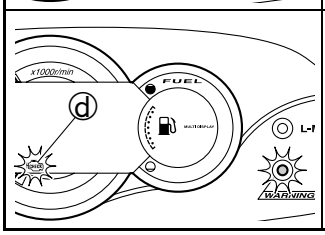	A sensor malfunction or a short circuit is detected.	The check engine warning indicator ⓓ flashes.	Flashes	Sounds intermittently.

(*1) Push the select button to stop the buzzer.
(*2) Fuel tank capacity: 60 L

Overlapping warnings

When multiple warnings overlap, the indicators will be displayed in the multifunction meter unit as indicated in the following table:

Overlapping warnings	Action
ⓐ ⓑ ⓒ ⓓ	Only the indicator ⓐ flashes.
ⓑ ⓒ ⓓ	The indicators flash repeatedly in the order ⓑ → ⓒ → ⓓ.

Self-diagnosis

While the engine is running, the diagnostic codes ⓔ can be checked by pushing the select button ⓕ for approximately 8 seconds. Because more than 1 diagnostic code cannot be shown even if multiple malfunctions have occurred, it is recommended to use the YDIS.

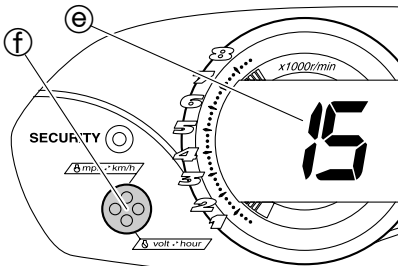

ⓔ Diagnostic code
ⓕ Select button

Yamaha Security System (VX Cruiser and VX Deluxe)

The following operations can be performed by pushing the buttons on the remote control transmitter.

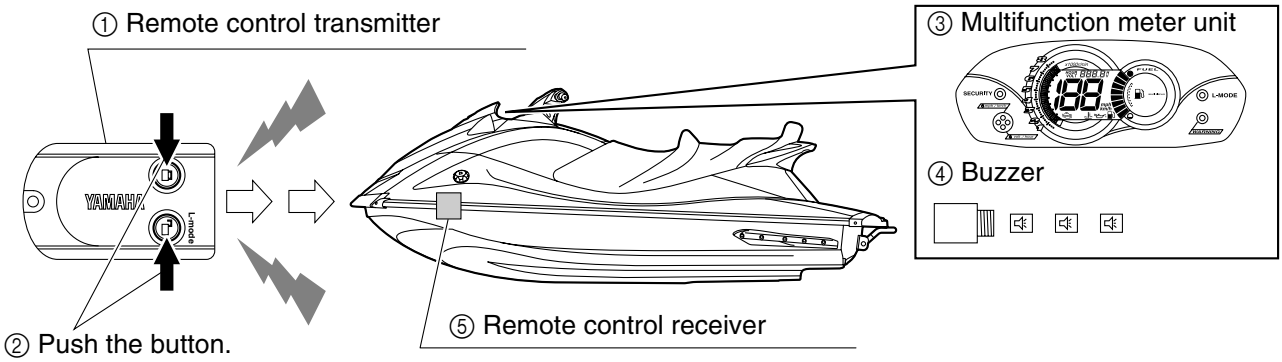

A Unlock → Lock

[START]
Security: Unlock mode

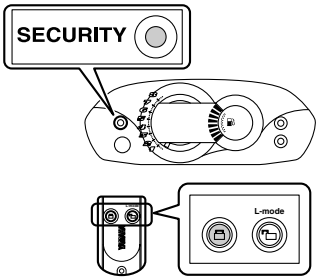

1. Push the lock button 1 time.

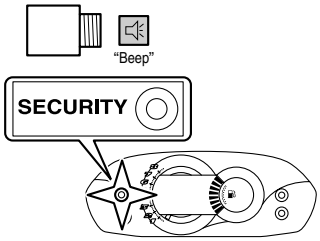

A. Buzzer sound: 1 time (0.3 second)
B. "SECURITY" indicator light: flashes 1 time, and then goes off.

[FINISH]
Security: Lock mode
Mode: Normal mode

B Lock → Unlock

[START]
Security: Lock mode

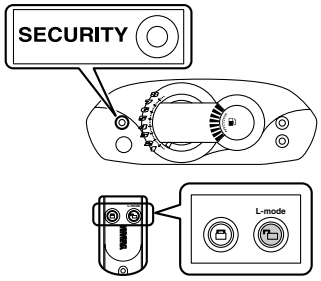

1. Push the unlock button 1 time.

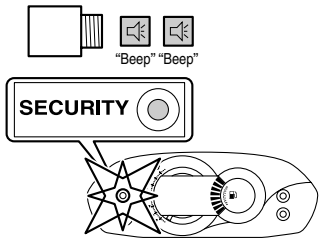

A. Buzzer sound: 2 times (0.3 second × 2)
B. "SECURITY" indicator light: flashes 2 times, and then remains on.

[FINISH]
Security: Unlock mode
Mode: Normal mode

C L-MODE

[START]
Security: Unlock mode

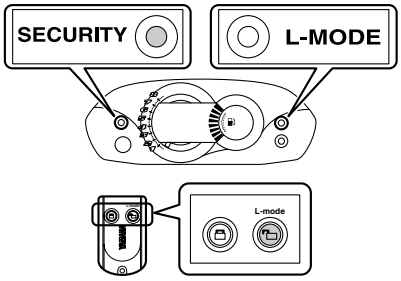

1. Push the unlock button for at least 4 seconds.

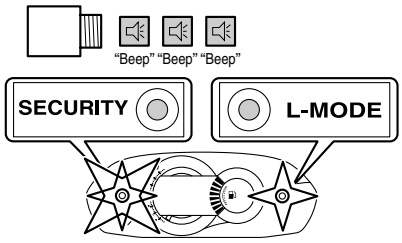

A. Buzzer sound: 3 times (0.3 second × 3)
B. "SECURITY" indicator light: flashes 3 times, and then remains on.
C. "L-MODE" indicator light: comes on.

[FINISH]
Security: Unlock mode
Mode: L-MODE

TIP:

When the lock mode is selected, the current selection mode, L-MODE or normal mode, is saved. Accordingly, when the unlock mode is selected, the number of times that the buzzer sounds will change depending on the currently selected operation mode. The buzzer sounds 2 times for the normal mode or 3 times for the L-MODE.

Technical tips

Engine control

The ECM controls ignition timing and fuel injection with information received from the sensors and switches installed on the engine and on the basis of the 3D map saved in the ECM.

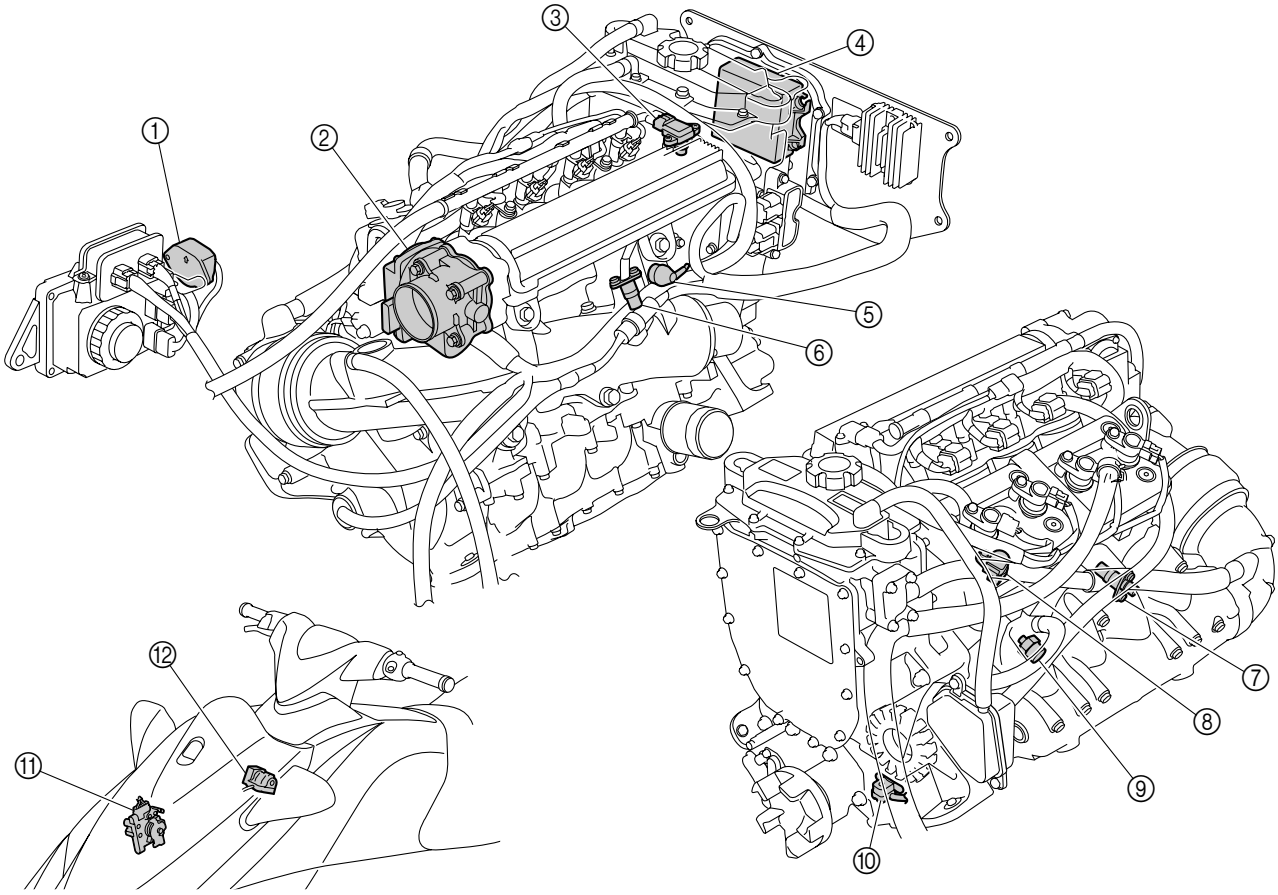

Part name	Functions
① Slant detection switch	Detects whether the watercraft is capsized.
② Throttle body assy. (TPS)	Detects the opening angle of the electronic control throttle valve (ETV).
③ Sensor assy.	Detects the temperature and pressure of the intake air.
④ ECM	Properly controls ignition timing, fuel injection, opening angle of the electronic control throttle valve (ETV), and other functions with information received from the sensors and switches.
⑤ Oil pressure switch	Detects the pressure of the engine oil.
⑥ Thermoswitch (exhaust)	Detects the temperature of the exhaust cooling water.
⑦ Thermoswitch (engine)	Detects the temperature of the cylinder block.
⑧ Cam position sensor	Detects the rotational position of the camshaft.
⑨ Engine temperature sensor	Detects the temperature of the cylinder block.
⑩ Pickup coil	Detects the rotational position of the crankshaft.
⑪ APS	Detects the opening angle of the APS pulley.
⑫ Steering sensor	Detects when the handlebar is turned sharply to the right or left and a load is applied.

ECM circuit diagram (VX Sport)

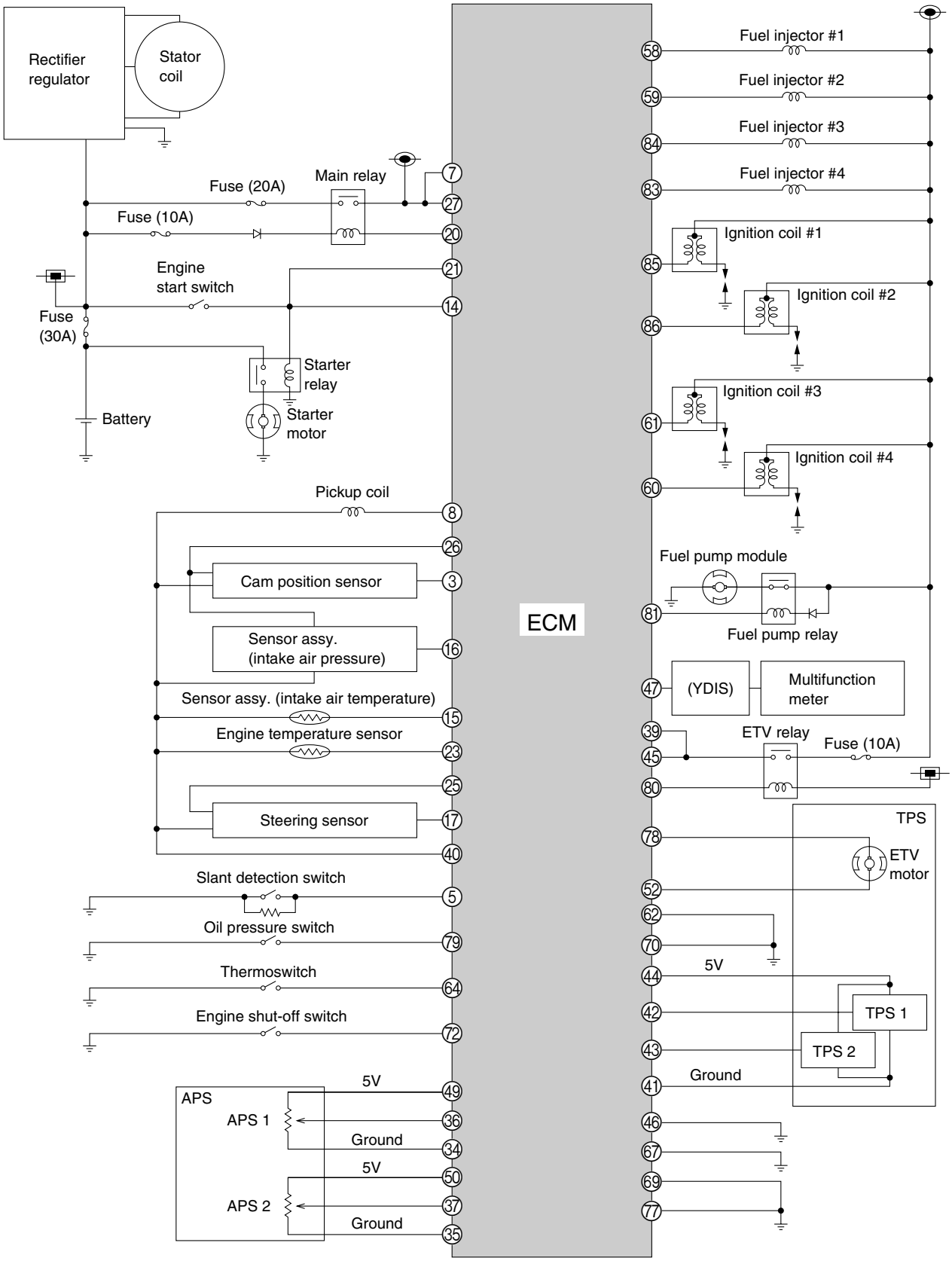

: Indicates a connection between the symbols.

ECM circuit diagram (VX Cruiser and VX Deluxe)

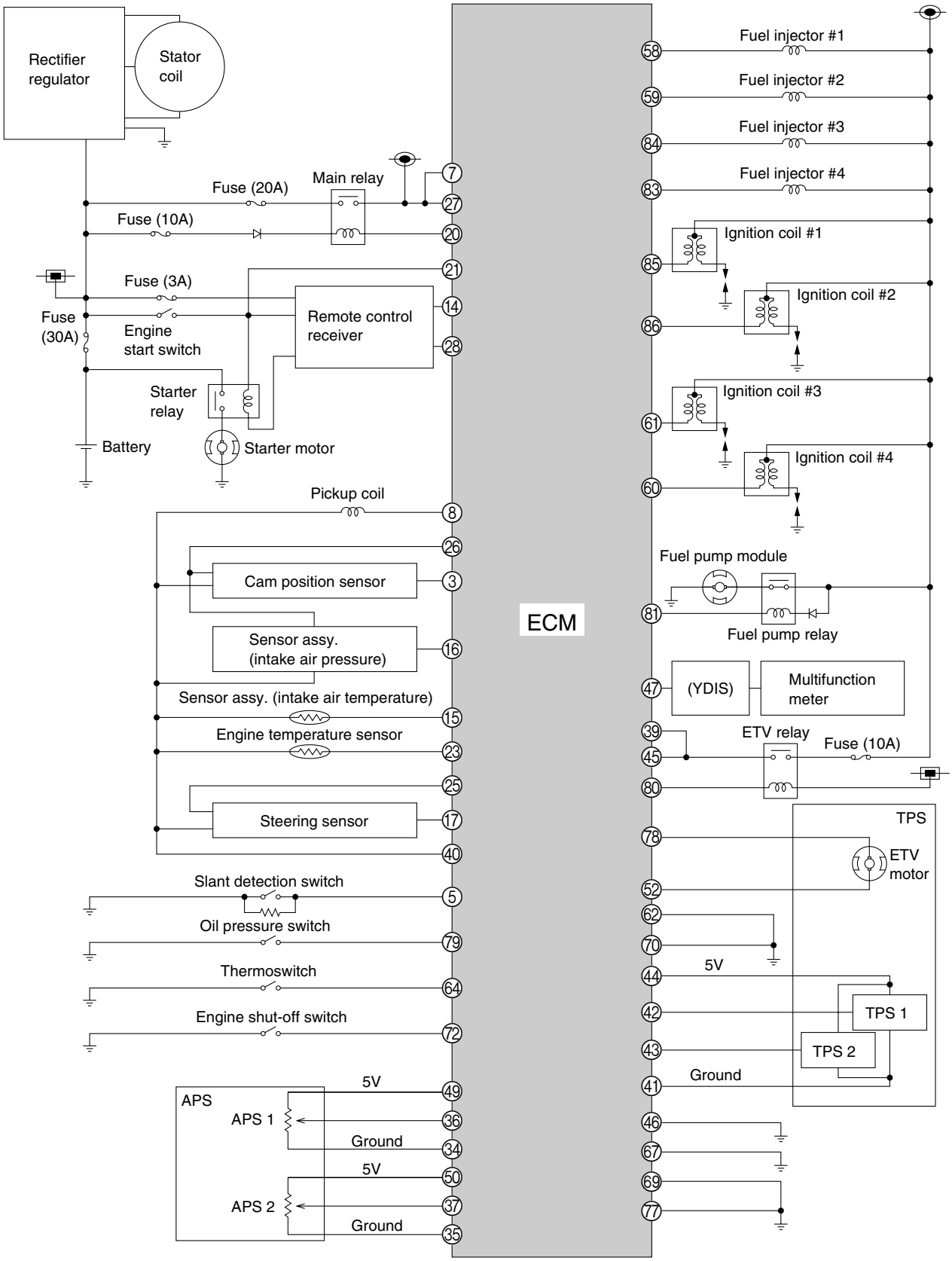

: Indicates a connection between the symbols.

ECM coupler layout

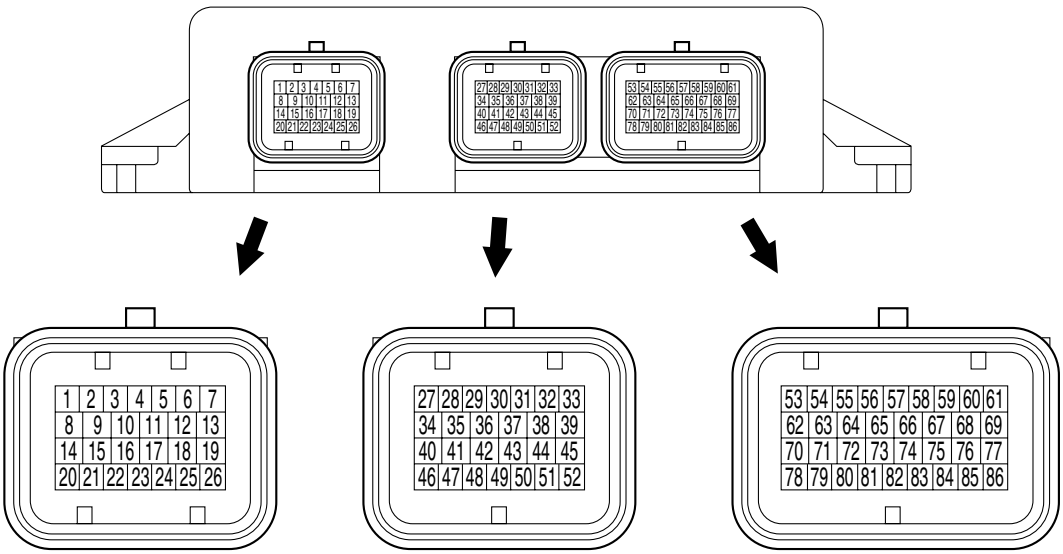

No.	Lead color	External connection lead	No.	Lead color	External connection lead	No.	Lead color	External connection lead
1	—	—	15	B/Y	Intake air temperature sensor	29	—	—
2	—	—	16	P/G	Intake air pressure sensor	30	—	—
3	G/O	Cam position sensor	17	W/L	Steering sensor	31	—	—
4	—	—	18	—	—	32	—	—
5	L/B	Slant detection switch	19	—	—	33	—	—
6	—	—	20	Y/G	Main and fuel pump relay (main relay)	34	B/R	APS 1 ground
7	R/Y	Battery power source	21	Y	Engine start switch	35	B/W	APS 2 ground
8	W/B	Pickup coil	22	—	—	36	P/R	APS 1
9	—	—	23	B/Y	Engine temperature sensor	37	P/W	APS 2
10	—	—	24	—	—	38	—	—
11	—	—	25	O/R	Steering sensor power source	39	R/Y	ETV relay power source (contact)
12	—	—	26	O	Sensor power source	40	B/O	Sensor ground
13	—	—	27	R/Y	Battery power source	41	B/O	TPS ground
14	Y	Main relay drive signal	28	W	Immobilizer serial communication (*1)	42	P	TPS 1

No.	Lead color	External connection lead	No.	Lead color	External connection lead	No.	Lead color	External connection lead
43	P/B	TPS 2	58	Pu/R	Fuel injector #1	73	—	—
44	O	TPS power source	59	Pu/B	Fuel injector #2	74	—	—
45	R/Y	ETV relay power source (contact)	60	B/G	Ignition coil #4	75	—	—
46	B	ECM ground	61	B/Y	Ignition coil #3	76	—	—
47	W/B	Self-diagnosis lead (communication), meter unit communication	62	B	ETV ground	77	B	Ground
48	—	—	63	—	—	78	G	ETV motor (positive)
49	O/R	APS 1 power source	64	P	Thermoswitch	79	P/W	Oil pressure switch
50	O/W	APS 2 power source	65	—	—	80	Y/W	ETV relay power source (coil)
51	—	—	66	—	—	81	L/R	Main and fuel pump relay (fuel pump relay)
52	L	ETV motor (negative)	67	B	Ground	82	—	—
53	—	—	68	—	—	83	Pu/G	Fuel injector #4
54	—	—	69	B	Ground	84	Pu/Y	Fuel injector #3
55	—	—	70	B	ETV ground	85	B/R	Ignition coil #1
56	—	—	71	—	—	86	B/W	Ignition coil #2
57	—	—	72	W	Engine shut-off switch			

(*1) VX Cruiser and VX Deluxe

Color code

B : Black
G : Green
L : Blue
O : Orange
P : Pink
W : White
Y : Yellow
B/G : Black/Green
B/O : Black/Orange
B/R : Black/Red
B/W : Black/White
B/Y : Black/Yellow
G/O : Green/Orange
L/B : Blue/Black
L/R : Blue/Red
O/R : Orange/Red
O/W : Orange/White
P/B : Pink/Black
P/G : Pink/Green
P/R : Pink/Red
P/W : Pink/White
Pu/B : Purple/Black
Pu/G : Purple/Green
Pu/R : Purple/Red
Pu/Y : Purple/Yellow
R/Y : Red/Yellow
W/B : White/Black
W/L : White/Blue
Y/G : Yellow/Green
Y/W : Yellow/White

Engine control system

Item	Condition	Action	Remarks
Overheat warning control	Control is activated when one of the following conditions is present: • Thermoswitch (engine) is on. • Thermoswitch (exhaust) is on. • Engine temperature exceeds 130 °C.	• Opening angle of the ETV is regulated. • Maximum engine speed is limited to approximately 4600 r/min.	Cancel: • Engine is stopped. • Thermoswitch (engine) is off, thermoswitch (exhaust) is off, and engine temperature is below 120 °C. * If the engine is stopped during overheat warning control, it can be restarted.
Oil pressure warning control	Control is activated when all of the following conditions are present: • Oil pressure switch is on. • ETV is open. • Engine speed exceeds 6000 r/min.	• Opening angle of the ETV is regulated. • Maximum engine speed is limited to approximately 4600 r/min.	Cancel: • Engine is stopped. * If the engine is stopped during oil pressure warning control, it can be restarted.
ETV failure control	ETV failed, or open or short circuit is detected in ETV circuit.	• Opening angle of the ETV is fixed to the default opening angle. • Maximum engine speed is limited to approximately 3300 r/min. • Ignition timing is controlled.	—
Idle speed control	APS pulley is at the fully closed position.	Engine speed is limited to 1600–1700 r/min.	—

<table>
<tr><th>Item</th><th>Condition</th><th colspan="3">Action</th><th>Remarks</th></tr>
<tr><td rowspan="7">Over revolution control</td><td rowspan="7">Engine speed exceeds 8500 r/min.</td><td colspan="3">Fuel injection is controlled.</td><td rowspan="7">—</td></tr>
<tr><td>Condition</td><td>Action</td><td>r/min</td></tr>
<tr><td>Normal</td><td>None</td><td>Below 8500</td></tr>
<tr><td>Level 1</td><td>Fuel injection is cut to cylinder #1.</td><td>8500</td></tr>
<tr><td>Level 2</td><td>Fuel injection is cut to cylinders #1 and #4.</td><td>8551</td></tr>
<tr><td>Level 3</td><td>Fuel injection is cut to cylinders #1, #2, and #4.</td><td>9000</td></tr>
<tr><td>Level 4</td><td>Fuel injection is cut to cylinders #1, #2, #3, and #4.</td><td>9500</td></tr>
<tr><td>L-MODE control</td><td>L-MODE is activated.</td><td colspan="3">• Opening angle of the ETV is regulated.
• Ignition timing is controlled.
• Maximum engine speed is limited to approximately 90% of the maximum engine speed in the normal mode.</td><td>Cancel:
L-MODE is deactivated.</td></tr>
<tr><td>Slant detection control</td><td>Control is activated when all of the following conditions are present:
• Slant detection switch is on.
• Engine speed is 3000 r/min or less.</td><td colspan="3">Ignition and fuel injection are cut to all cylinders and the engine is stopped.</td><td>Cancel:
Engine is stopped.
* The check engine warning indicator does not come on and the buzzer does not sound.</td></tr>
</table>

Item	Condition	Action	Remarks
Off-throttle steering control	Control is activated when all of the following conditions are present: • Engine speed exceeds 6000 r/min for a few seconds or more. • APS pulley is at the fully closed position. • Steering sensor is ON.	Engine speed is increased to approximately 3500 r/min for a few seconds.	—
Cam position sensor failure control	• Cam position sensor failed for 10 seconds.	—	Cancel: Engine is stopped.

Specification

2

Model data

Model code

Item	Unit	Model		
		VX Sport	VX Cruiser	VX Deluxe
Hull		F2N		
Engine/jet		6BU/6BU		

Dimension and weight

Item	Unit	Model		
		VX Sport	VX Cruiser	VX Deluxe
Length	mm (in)	3220 (126.8)	3270 (128.7)	3220 (126.8)
Width	mm (in)	1170 (46.1)		
Height	mm (in)	1160 (45.7)		
Dry weight	kg (lb)	334 (736)	340 (750)	337 (743)
Maximum capacity	Person/ kg (lb)	3/240 (529)		

Performance

Item	Unit	Model		
		VX Sport	VX Cruiser	VX Deluxe
Full throttle operating range	r/min	8000		
Trolling speed	r/min	1600–1700		
Maximum fuel consumption	L/h (US gal/ h, Imp.gal/h)	28.1 (7.4, 6.2)		
Cruising range	h	2.14		

Power unit

Item	Unit	Model		
		VX Sport	VX Cruiser	VX Deluxe
Type		4-stroke L4, DOHC 5 valve		
Cylinder quantity		4		
Total displacement	cm^3 (cu. in)	1052 (64.2)		
Bore × stroke	mm (in)	76 × 58 (2.99 × 2.28)		
Compression ratio		11.4 : 1		
Exhaust system		Wet exhaust		
Lubrication system		Dry sump		
Cooling system		Water cooled		
Starting system		Electric starter		
Camshaft drive system		Chain drive		
Timing chain tensioning system		Automatic		
Ignition system		TCI		
Maximum ignition timing advance	Degree	BTDC 32°		
Spark plug		CR9EB (NGK)		
Spark plug gap	mm (in)	0.7–0.8 (0.028–0.031)		
Firing order		1–2–4–3		
Oil filter type		Cartridge type		
Oil pump type		Trochoid		

Drive unit

Item	Unit	Model		
		VX Sport	VX Cruiser	VX Deluxe
Jet pump type		Axial flow, single stage		
Impeller rotation		Counterclockwise (viewed from rear)		
Transmission		Constant mesh 1-speed		
Jet thrust nozzle horizontal angle	Degree	24 + 24		
Trim system		—		
Jet thrust nozzle trim angle	Degree	3		
Reverse system		—	Reverse gate	

Fuel and oil requirement

Item	Unit	Model		
		VX Sport	VX Cruiser	VX Deluxe
Fuel type		Regular unleaded gasoline		
Fuel minimum rating	PON	86		
	RON	90		
Fuel tank capacity	L (US gal, Imp.gal)	60.0 (15.9, 13.2)		
Engine oil type		4-stroke motor oil		
Engine oil grade	API	SE, SF, SG, SH, SJ, or SL		
	SAE	10W-30, 10W-40, 20W-40, 20W-50		
Engine oil quantity				
Total amount	L (US qt, Imp.qt)	4.3 (4.5, 3.8)		
Without oil filter replacement	L (US qt, Imp.qt)	2.0 (2.1, 1.8)		
With oil filter replacement	L (US qt, Imp.qt)	2.2 (2.3, 1.9)		

Battery requirement

Item	Unit	Model		
		VX Sport	VX Cruiser	VX Deluxe
Type		Fluid		
Capacity	V/Ah	12/19		
Specific gravity at 20 °C (68 °F)		1.265		

Fuel system technical data

Fuel system

Item	Unit	Model		
		VX Sport	VX Cruiser	VX Deluxe
Throttle body				
Manufacturer		Mikuni		
ID mark		6D3**		
Throttle cable installation length	mm (in)	18.4 ± 1.0 (0.72 ± 0.04)		
Throttle lever free play	mm (in)	4.0–7.0 (0.16–0.28)		
Fuel pump				
Fuel pump type		Electrical		
Fuel pressure	kPa (kgf/cm^2, psi)	319–340 (3.19–3.40, 45.4–48.4)		

Power unit technical data

Power unit

Item	Unit	Model		
		VX Sport	VX Cruiser	VX Deluxe
Cylinder				
Minimum compression pressure (*1)	kPa (kgf/cm^2, psi)	810 (8.1, 115)		
Oil cooler				
Water passage holding pressure	kPa (kgf/cm^2, psi)	196 (1.96, 27.9)		

(*1) Measuring conditions:
Ambient temperature 20 °C (68 °F), with spark plugs removed from all cylinders.
The figures are for reference only.

Cylinder head assy.

Item	Unit	Model		
		VX Sport	VX Cruiser	VX Deluxe
Cylinder head				
Warpage limit	mm (in)	0.10 (0.0039)		
Camshaft cap inside diameter	mm (in)	24.500–24.521 (0.9646–0.9654)		

Item	Unit	Model		
		VX Sport	VX Cruiser	VX Deluxe
Camshaft				
Cam lobe height				
Intake (*1)	mm (in)	31.800 (1.252)		
Exhaust (*1)	mm (in)	30.750 (1.211)		
Cam lobe width				
Intake (*1)	mm (in)	25.000 (0.984)		
Exhaust (*1)	mm (in)	25.000 (0.984)		
Runout	mm (in)	0.015 (0.0006)		
Journal diameter	mm (in)	24.437–24.450 (0.9621–0.9626)		
Journal oil clearance	mm (in)	0.050–0.084 (0.0020–0.0033)		
Valve				
Clearance				
Intake	mm (in)	0.11–0.20 (0.0043–0.0079)		
Exhaust	mm (in)	0.25–0.34 (0.0098–0.0134)		
Head diameter				
Intake	mm (in)	22.900–23.100 (0.9016–0.9094)		
Exhaust	mm (in)	24.400–24.600 (0.9606–0.9685)		
Face width				
Intake and exhaust	mm (in)	1.909–2.616 (0.0752–0.1030)		
Seat contact width				
Intake	mm (in)	0.900–1.100 (0.0354–0.0433)		
Exhaust	mm (in)	0.900–1.100 (0.0354–0.0433)		
Margin thickness				
Intake and exhaust	mm (in)	0.700 (0.0276)		
Valve stem				
Diameter				
Intake	mm (in)	3.975–3.990 (0.1565–0.1571)		
Exhaust	mm (in)	4.465–4.480 (0.1758–0.1764)		
Runout	mm (in)	0.01 (0.0004)		
Valve guide				
Inside diameter				
Intake	mm (in)	4.000–4.012 (0.1575–0.1580)		
Exhaust	mm (in)	4.500–4.512 (0.1772–0.1776)		
Stem to guide clearance				
Intake	mm (in)	0.010–0.037 (0.0004–0.0015)		
Exhaust	mm (in)	0.020–0.047 (0.0008–0.0019)		
Valve spring				
Free length				
Intake	mm (in)	38.90 (1.531)		
Exhaust	mm (in)	40.67 (1.601)		
Installed length				
Intake	mm (in)	34.50 (1.358)		
Exhaust	mm (in)	35.00 (1.378)		
Tilt				
Intake	mm (in)	1.70 (0.067)		
Exhaust	mm (in)	1.80 (0.071)		

(*1) The figures are for reference only.

Crank case assy.

Item	Unit	Model		
		VX Sport	VX Cruiser	VX Deluxe
Cylinder				
Bore	mm (in)	76.000–76.015 (2.9921–2.9927)		
Piston				
Diameter	mm (in)	75.895–75.910 (2.9880–2.9886)		
Measuring point	mm (in)	5.0 (0.20)		
Ring groove (Top)	mm (in)	0.920–0.940 (0.0362–0.0370)		
Ring groove (2nd)	mm (in)	0.810–0.830 (0.0319–0.0327)		
Ring groove (Oil)	mm (in)	1.510–1.530 (0.0594–0.0602)		
Pin boss bore diameter	mm (in)	17.002–17.013 (0.6694–0.6698)		
Pin outside diameter	mm (in)	16.991–17.000 (0.6689–0.6693)		
Piston ring				
End gap measuring point	mm (in)	6.0 (0.24)		
Top ring				
Type		Barrel		
Dimension height (B)	mm (in)	0.875–0.890 (0.0344–0.0350)		
Dimension width (T)	mm (in)	2.600–2.800 (0.1024–0.1102)		
End gap (*1)	mm (in)	0.320–0.440 (0.0126–0.0173)		
Side clearance	mm (in)	0.030–0.065 (0.0012–0.0026)		
2nd ring				
Type		Taper		
Dimension height (B)	mm (in)	0.775–0.790 (0.0305–0.0311)		
Dimension width (T)	mm (in)	2.650–2.850 (0.1043–0.1122)		
End gap (*1)	mm (in)	0.430–0.580 (0.0169–0.0228)		
Side clearance	mm (in)	0.020–0.055 (0.0008–0.0022)		
Oil ring				
Dimension height (B)	mm (in)	1.370–1.470 (0.0539–0.0579)		
Dimension width (T) (*1)	mm (in)	2.600 (0.1024)		
End gap (*1)	mm (in)	0.100–0.350 (0.0039–0.0138)		
Side clearance	mm (in)	0.040–0.160 (0.0016–0.0063)		
Connecting rod				
Small end inside diameter	mm (in)	17.005–17.018 (0.6695–0.6700)		
Bearing color code		1.Brown 2.Black 3.Blue 4.Green		
Crankshaft				
Journal diameter	mm (in)	33.976–34.000 (1.3376–1.3386)		
Pin diameter	mm (in)	35.976–36.000 (1.4164–1.4173)		
Runout	mm (in)	0.03 (0.0012)		
Journal oil clearance	mm (in)	0.004–0.028 (0.0002–0.0011)		
Pin oil clearance	mm (in)	0.016–0.040 (0.0006–0.0016)		
Bearing color code		3. Red/Red 4. Red/Brown 5. Red/Black 6. Red/Blue 7. Red/Green		

(*1) The figures are for reference only.

Jet pump unit technical data

Jet pump unit

Item	Unit	Model		
		VX Sport	VX Cruiser	VX Deluxe
Impeller housing				
Inside diameter	mm (in)	155.35–155.45 (6.116–6.120)		
Impeller-to-housing clearance	mm (in)	0.35–0.45 (0.014–0.018)		
Clearance limit	mm (in)	0.60 (0.024)		
Impeller				
Material		Stainless steel		
Blades number		3		
Pitch angle	Degree	21.2		
Drive shaft				
Runout	mm (in)	0.01 (0.0004)		
Intermediate drive shaft				
Runout	mm (in)	0.30 (0.012)		
Nozzle				
Diameter	mm (in)	86.60–87.20 (3.409–3.433)		

Electrical technical data

Ignition system

Item	Unit	Model		
		VX Sport	VX Cruiser	VX Deluxe
ECM unit				
Output peak voltage				
at cranking (loaded)	V	94.0		
at 2000 r/min (loaded)	V	120.0		
at 3500 r/min (loaded)	V	148.0		
Pickup coil				
Output peak voltage				
at cranking (unloaded)	V	6.0		
at cranking (loaded)	V	5.0		
at 2000 r/min (loaded)	V	17.0		
at 3500 r/min (loaded)	V	23.0		
Resistance (*1)				
at 20 °C (68 °F)	Ω	459–561		

(*1) The figures are for reference only.

Charging system

Item	Unit	Model		
		VX Sport	VX Cruiser	VX Deluxe
Stator coil				
Output peak voltage				
at cranking (unloaded)	V	6.0		
at 2000 r/min (unloaded)	V	26.0		
at 3500 r/min (unloaded)	V	45.0		
Resistance (*1)				
at 20 °C (68 °F)	Ω	0.23–0.29		
Rectifier regulator				
Output peak voltage				
at 2000 r/min (loaded)	V	13.0		
at 3500 r/min (loaded)	V	13.0		

(*1) The figures are for reference only.

Control system

Item	Unit	Model		
		VX Sport	VX Cruiser	VX Deluxe
Oil pressure switch				
Input voltage (*1)	V	11.0–12.0		
Continuity pressure	kPa (kgf/cm^2, psi)	128–166 (1.28–1.66, 18.2–23.6)		
Thermoswitch (engine)				
Input voltage (*1)	V	11.0–12.0		
Continuity temperature	°C (°F)	84–90 (183–194)		
No continuity temperature	°C (°F)	70–84 (158–183)		
Thermoswitch (exhaust)				
Input voltage (*1)	V	11.0–12.0		
Continuity temperature	°C (°F)	80–86 (176–187)		
No continuity temperature	°C (°F)	66–80 (151–176)		
Engine temperature sensor				
Input voltage (*1)	V	4.75–5.25		
Resistance (*1)				
at 20 °C (68 °F)	kΩ	54.2–69.0		
at 100 °C (212 °F)	kΩ	3.12–3.48		
Sensor assy.				
Input voltage (*1)	V	4.75–5.25		
Resistance (*1)				
at 0 °C (32 °F)	kΩ	5.4–6.6		
at 80 °C (176 °F)	kΩ	0.29–0.39		

Item	Unit	Model		
		VX Sport	VX Cruiser	VX Deluxe
TPS				
Output voltage				
with throttle lever fully closed				
TPS 1	V	0.6–0.9		
with throttle lever fully open				
TPS 2	V	4.6–4.7		
Throttle valve opening angle				
with throttle lever fully closed	Degree	2.0–8.0		
with throttle lever fully open	Degree	More than 70		
Input voltage (*1)	V	4.75–5.25		
APS				
Output voltage				
with throttle lever fully closed				
APS 1	V	0.50–0.90		
APS 2	V	0.35–1.05		
with throttle lever fully open				
APS 1	V	3.75–4.35		
APS 2	V	3.60–4.50		
Input voltage (*1)				
APS 1	V	4.75–5.25		
APS 2	V	4.75–5.25		
Resistance (*1)				
at 20 °C (68 °F)				
with APS pulley fully closed				
APS 1	kΩ	0.50–0.90		
APS 2	kΩ	0.35–1.05		
with APS pulley fully open				
APS 1	kΩ	3.75–4.35		
APS 2	kΩ	3.60–4.50		
ETV relay				
Input voltage	V	12 V (battery voltage)		
Cam position sensor				
Input voltage (*1)	V	4.75–5.25		
Output voltage				
Position a, c	V	More than 4.8		
Position b	V	Less than 0.8		
Slant detection switch				
Input voltage (*1)	V	4.75–5.25		
Steering sensor				
Input voltage (*1)	V	4.75–5.25		

Item	Unit	Model		
		VX Sport	VX Cruiser	VX Deluxe
ECM unit				
Input voltage	V	12 V (battery voltage)		

(*1) The figures are for reference only.

Fuel system

Item	Unit	Model		
		VX Sport	VX Cruiser	VX Deluxe
Fuel injector				
Input voltage	V	12 V (battery voltage)		
Resistance (*1)				
at 20 °C (68 °F)	Ω	11.5–12.5		
Fuel pump module				
Input voltage	V	12 V (battery voltage)		
Fuel sender resistance (*1)				
at 20 °C (68 °F)				
Lower position	Ω	133.5–136.5		
Upper position	Ω	5.0–7.0		

(*1) The figures are for reference only.

Starting system

Item	Unit	Model		
		VX Sport	VX Cruiser	VX Deluxe
Fuse				
Rating				
Battery	V/A	12/30		
Main and fuel pump relay (main side)	V/A	12/20		
Main and fuel pump relay (fuel pump side)	V/A	12/10		
ETV relay	V/A	12/10		
Remote control receiver	V/A	—	12/3	
Starter motor				
Type		Constant mesh		
Output	kW	0.8		
Cranking time limit	Seconds	30		
Commutator diameter	mm (in)	27.0–28.0 (1.06–1.10)		
Commutator undercut (*1)	mm (in)	0.2–0.7 (0.008–0.028)		
Brush length	mm (in)	6.5–12.5 (0.26–0.49)		

(*1) The figures are for reference only.

Meter system

Item	Unit	Model		
		VX Sport	VX Cruiser	VX Deluxe
Remote control transmitter				
Battery				
Type		—	CR2016	
Rating	V	—	3.0	
Remote control receiver				
Input voltage	V	—	12 V (battery voltage)	
Output voltage (*1)	V	—	11.0–12.0	
Multifunction meter unit				
Input voltage	V	12 V (battery voltage)		
Buzzer				
Input voltage (*1)	V	11.0–12.0		
Speed sensor				
Output voltage (on pulse)	mV	Less than 400 mV		
	V	More than 11.6 V		

(*1) The figures are for reference only.

Specified tightening torque

Fuel system

Part to tightened		Screw size	Tightening torque N·m	kgf·m	ft·lb	See page
Fuel pump module nut	1st	—	3	0.3	2.2	4-1
	2nd		6	0.6	4.4	
Fuel rail bolt		M8	13	1.3	9.6	4-1
Air intake pipe clamp		—	2	0.2	1.5	4-10
Air filter case cover screw		ø5	2	0.2	1.5	4-10
Air filter case bolt		M8	17	1.7	12.5	4-10
Throttle body assy. bolt		M8	13	1.3	9.6	4-10
Air filter case bracket nut		—	17	1.7	12.5	4-17
Fuel filler hose clamp		—	3.7	0.37	2.7	4-17
Fuel filler neck nut		—	5	0.5	3.7	4-17
Strap bolt		M8	16	1.6	11.8	4-17

Power unit

Part to tightened		Screw size	Tightening torque N·m	kgf·m	ft·lb	See page
Electrical plate bolt		M8	17	1.7	12.5	5-1
Fuse box nut		—	17	1.7	12.5	5-1
Joint clamp		—	2	0.2	1.5	5-1
Joint clamp		—	3.7	0.37	2.7	5-1
Oil filter		—	18	1.8	13.3	5-1
Coupling cover bolt		M6	8	0.8	5.9	5-3
Engine mounting bolt		M8	17	1.7	12.5	5-3
Engine mount bolt		M8	17	1.7	12.5	5-4
Stopper bolt		M6	7	0.7	5.2	5-4
Spacer bolt		M6	5	0.5	3.7	5-4
Starter motor cable nut		—	5	0.5	3.7	5-14
Starter motor bolt		M8	18	1.8	13.3	5-14
Intake manifold bolt	1st	M8	9	0.9	6.6	5-20
	2nd		18	1.8	13.3	
Stay bolt	1st	M8	15	1.5	11.1	5-20
	2nd		40	4.0	29.5	
Intake manifold joint clamp		—	3	0.3	2.2	5-20
Sensor assy. screw		ø5	4	0.4	3.0	5-20
Exhaust pipe 2 bolt	1st	M10	2	0.2	1.5	5-24
	2nd		15	1.5	11.1	
	3rd		40	4.0	29.5	
Exhaust pipe 1 bolt	1st	M8	22	2.2	16.2	5-24
	2nd		35	3.5	25.8	
Exhaust pipe end bolt	1st	M6	4	0.4	3.0	5-24
	2nd		8	0.8	5.9	
Thermoswitch (exhaust) bolt		M6	8	0.8	5.9	5-24
Exhaust manifold bolt	1st	M8	22	2.2	16.2	5-26
	2nd		35	3.5	25.8	
Water jacket bolt		M6	8	0.8	5.9	5-32

Part to tightened		Screw size	Tightening torque N·m	kgf·m	ft·lb	See page
Oil separator bolt	1st	M6	4	0.4	3.0	5-34
	2nd		8	0.8	5.9	
Bracket bolt	1st	M6	4	0.4	3.0	5-34
	2nd		8	0.8	5.9	
Oil tank bolt	1st	M10	15	1.5	11.1	5-34
	2nd		40	4.0	29.5	
Oil tank stay nut	1st	—	2	0.2	1.5	5-34
	2nd		15	1.5	11.1	
	3rd		40	4.0	29.5	
Oil tank stay bolt	1st	M10	2	0.2	1.5	5-34
	2nd		15	1.5	11.1	
	3rd		40	4.0	29.5	
Holder bolt	1st	M6	4	0.4	3.0	5-34
	2nd		8	0.8	5.9	
Earth plate bolt		M6	8	0.8	5.9	5-36
Oil tank cover bolt	1st	M6	4	0.4	3.0	5-36
	2nd		8	0.8	5.9	
Oil breather plate bolt	1st	M5	2	0.2	1.5	5-36
	2nd		4	0.4	3.0	
Baffle plate bolt	1st	M5	2	0.2	1.5	5-36
	2nd		4	0.4	3.0	
Oil strainer bolt	1st	M6	4	0.4	3.0	5-36
	2nd		8	0.8	5.9	
Oil cooler cover bolt	1st	M6	4	0.4	3.0	5-36
	2nd		8	0.8	5.9	
Anode screw		ø4	4	0.4	3.0	5-36
Oil drain plug		M8	13	1.3	9.6	5-47
Oil pump assy. bolt		M6	10	1.0	7.4	5-47
	1st	M8	15	1.5	11.1	5-47
	2nd		29	2.9	21.4	
Oil strainer bolt	1st	M6	4	0.4	3.0	5-47
	2nd		8	0.8	5.9	
Reduction drive gear case assy. bolt	1st	M6	4	0.4	3.0	5-50
	2nd		8	0.8	5.9	
	1st	M8	15	1.5	11.1	
	2nd		29	2.9	21.4	
Drive coupling		—	29	2.9	21.4	5-51
Cam position sensor bolt		M6	10	1.0	7.4	5-58
Cooling water pipe bolt	1st	M6	4	0.4	3.0	5-58
	2nd		8	0.8	5.9	
Ignition coil bolt		M6	8	0.8	5.9	5-58
Spark plug		—	13	1.3	9.6	5-58
Cylinder head cover bolt		M6	12	1.2	8.9	5-58
Cap bolt		M6	10	1.0	7.4	5-59
Timing chain tensioner bolt		M6	10	1.0	7.4	5-59
Camshaft cap bolt		M6	10	1.0	7.4	5-59
Camshaft sprocket bolt		M7	24	2.4	17.7	5-59
Engine hanger bolt		M8	18	1.8	13.3	5-73

Part to tightened		Screw size	Tightening torque N·m	kgf·m	ft·lb	See page
Cylinder head bolt		M6	10	1.0	7.4	5-73
Cylinder head nut ①	1st	—	20	2.0	14.8	5-73
	2nd		140°			
Cylinder head nut ②	1st	—	20	2.0	14.8	5-73
	2nd		105°			
Cylinder head nut ③	1st	—	20	2.0	14.8	5-73
	2nd		120°			
Plate bolt	1st	M6	4	0.4	3.0	5-74
	2nd		8	0.8	5.9	
Generator cover bolt	1st	M10	15	1.5	11.1	5-86
	2nd		50	5.0	36.9	
Flywheel magneto bolt		M10	75	7.5	55.3	5-86
Starter clutch bolt		M8	24	2.4	17.7	5-86
Pickup coil bolt		M5	5	0.5	3.7	5-87
Washer bolt		M5	5	0.5	3.7	5-87
Holder bolt		M6	15	1.5	11.1	5-87
Stator coil bolt		M6	15	1.5	11.1	5-87
Thermoswitch (engine) bolt		M6	8	0.8	5.9	5-92
Engine temperature sensor		—	15	1.5	11.1	5-92
Anode cover bolt		M8	20	2.0	14.8	5-92
Anode bolt		M6	12	1.2	8.9	5-92
Oil pressure switch lead bolt		M4	2	0.2	1.5	5-92
Oil pressure switch		—	8.4	0.84	6.1	5-92
Oil filter bolt		—	35	3.5	25.8	5-92
Oil pan bolt		M6	12	1.2	8.9	5-94
Crankcase bolt		M6	12	1.2	8.9	5-94
	1st	M9	7.8	0.78	5.6	
	2nd		Loosen completely			
	3rd		14.7	1.47	10.6	
	4th		50°			
Oil pipe bolt		M6	12	1.2	8.9	5-94
Connecting rod nut	1st	—	20	2.0	14.8	5-94
	2nd		120°			

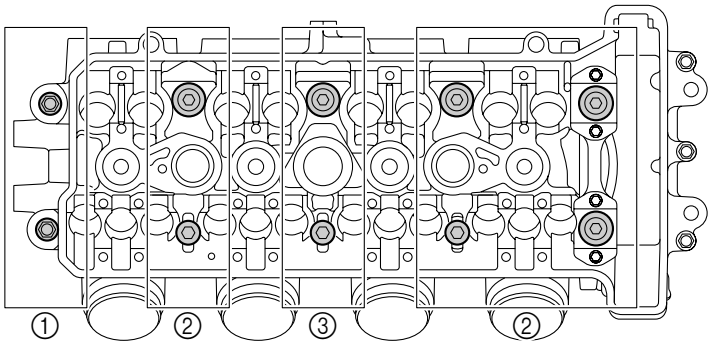

Jet pump unit

Part to tightened	Screw size	Tightening torque			See page
		N·m	kgf·m	ft·lb	
Intake grate bolt	M6	8	0.8	5.9	6-1
	M10	40	4.0	29.5	
Ride plate bolt	M8	17	1.7	12.5	6-1
Speed sensor screw	ø5	4	0.4	3.0	6-1
Steering cable joint nut	—	7	0.7	5.2	6-2
Spout hose clamp (hull end)	—	2	0.2	1.5	6-2
Rubber plate bolt	M6	7	0.7	5.2	6-2
Rubber plate nut	—	7	0.7	1.5	6-2
Jet pump unit assy. bolt	M6	8	0.8	5.9	6-2
	M8	17	1.7	12.5	
	M10	40	4.0	29.5	
Bracket bolt	M8	14	1.4	10.3	6-2
Reverse gate assy. bolt	M8	15	1.5	11.1	6-6
Spring nut	—	8	0.8	5.9	6-6
Ball joint nut	—	8	0.8	5.9	6-6
Jet thrust nozzle bolt	M8	15	1.5	11.1	6-7
Impeller duct bolt	M10	40	4.0	29.5	6-7
Water inlet cover/water inlet strainer bolt	M6	7	0.7	5.2	6-7
Cap bolt	M6	8	0.8	5.9	6-8
Impeller	—	110	11.0	81.1	6-8
Flushing hose nut	—	5.5	0.55	4.0	6-14
Transom plate nut	—	26	2.6	19.2	6-14
Intermediate housing bolt	M8	17	1.7	12.5	6-17
Driven coupling	—	36	3.6	26.6	6-17

Electrical system

Part to tightened	Screw size	Tightening torque			See page
		N·m	kgf·m	ft·lb	
Slant detection switch screw	ø6	3	0.3	2.2	7-4
Starter motor cable bolt	M6	4	0.4	3.0	7-4
Positive battery cable bolt	M6	4	0.4	3.0	7-4
ECM cover nut	—	4	0.4	3.0	7-6
ECM nut	—	4	0.4	3.0	7-6
APS nut	—	17	1.7	12.5	7-22
Starter motor terminal nut	—	9	0.9	6.6	7-32
Rear cover bolt	M5	6	0.6	4.4	7-32

Hull and hood

Part to tightened	Screw size	Tightening torque			See page
		N·m	kgf·m	ft·lb	
Upper handlebar cover screw	ø4	1	0.1	0.7	8-1
	ø5	1	0.1	0.7	
Lower handlebar cover screw	ø6	4	0.4	3.0	8-1
Grip end bolt	M5	1	0.1	0.7	8-2
Left handlebar switch assy. screw	ø5	3	0.3	2.2	8-2

Part to tightened	Screw size	Tightening torque			See page
		N·m	kgf·m	ft·lb	
Throttle lever assy. bolt	M5	3	0.3	2.2	8-2
Upper handlebar holder bolt	M8	20	2.0	14.8	8-2
Mirror nut	—	7	0.7	5.2	8-8
Hood lock bolt	M5	4	0.4	3.0	8-8
Front hood screw	ø5	2	0.2	1.5	8-8
Hinge nut	—	7	0.7	5.2	8-8
Hinge bolt	M6	7	0.7	5.2	8-8
Engine hatch cover nut	—	5	0.5	3.7	8-11
Engine hatch cover bolt	M6	5	0.5	3.7	8-11
Multifunction meter screw	ø5	4	0.4	3.0	8-11
Grip bolt (VX Cruiser and VX Deluxe)	M6	5	0.5	3.7	8-11
Shift lever assy. nut (VX Cruiser and VX Deluxe)	—	5	0.5	3.7	8-11
Shift lever assy. bolt (VX Cruiser and VX Deluxe)	M6	5	0.5	3.7	8-11
Cable stopper bolt	M6	7	0.7	5.2	8-13
Steering master assy. bolt	M8	17	1.7	12.5	8-13
Steering arm assy. bolt	M8	16	1.6	11.8	8-14
Ball joint nut	—	7	0.7	5.2	8-14
Ball joint	—	7	0.7	5.2	8-14
Buzzer bracket bolt	M5	4	0.4	3.0	8-14
Steering sensor bolt	M6	7	0.7	5.2	8-14
Steering cable joint locknut	—	7	0.7	5.2	8-16
Speed sensor lead grommet nut	—	6	0.6	4.4	8-16
Shift cable bracket nut	—	5	0.5	3.7	8-16
Shift cable locknut (jet pump end)	—	4	0.4	3.0	8-16
Seat lock assy. bolt	M6	6	0.6	4.4	8-20
Projection nut	—	26	2.6	19.2	8-20
Handgrip nut	—	5	0.5	3.7	8-20
Seat holder nut	—	15	1.5	11.1	8-21
Cooling water pilot outlet nut	—	4	0.4	3.0	8-21
Rubber hose/water tank clamp	—	3.7	0.37	2.7	8-26
Water lock/rubber hose clamp	—	3.7	0.37	2.7	8-26
Plate/rubber hose/exhaust valve nut	—	5	0.5	3.7	8-26
Bow eye bolt	M6	13	1.3	9.6	8-30
Front protector nut	—	7	0.7	5.2	8-30
Sponson bolt	M8	15	1.5	11.1	8-30
Ski tow nut	—	15	1.5	11.1	8-31
Spout hose clamp	—	2	0.2	1.5	8-31
Spout nut	—	5	0.5	3.7	8-31
Stern eye nut	—	15	1.5	11.1	8-31
Drain plug nut	—	2	0.2	1.5	8-31
Reboarding step assy. bolt (VX Cruiser)	M8	15	1.5	11.1	8-31

General tightening torque

This chart indicates the tightening torques for standard fasteners with a standard ISO thread pitch. Tightening torque specifications for special components and assemblies are provided in the applicable sections of this manual. To prevent warpage, tighten multi-fastener assemblies in a crisscross fashion and progressive stages until the specified torque is reached. Unless otherwise indicated, torque specifications require clean, dry threads.
Components should be at room temperature.

Width across flats (A)	Screw size (B)	General torque specifications		
		N·m	kgf·m	ft·lb
8 mm	M5	5	0.5	3.7
10 mm	M6	8	0.8	5.9
12 mm	M8	18	1.8	13.3
14 mm	M10	36	3.6	26.6
17 mm	M12	43	4.3	31.7

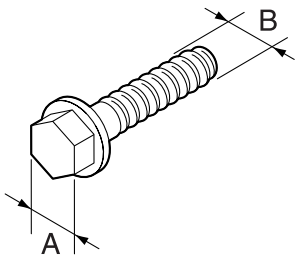

Lubrication system

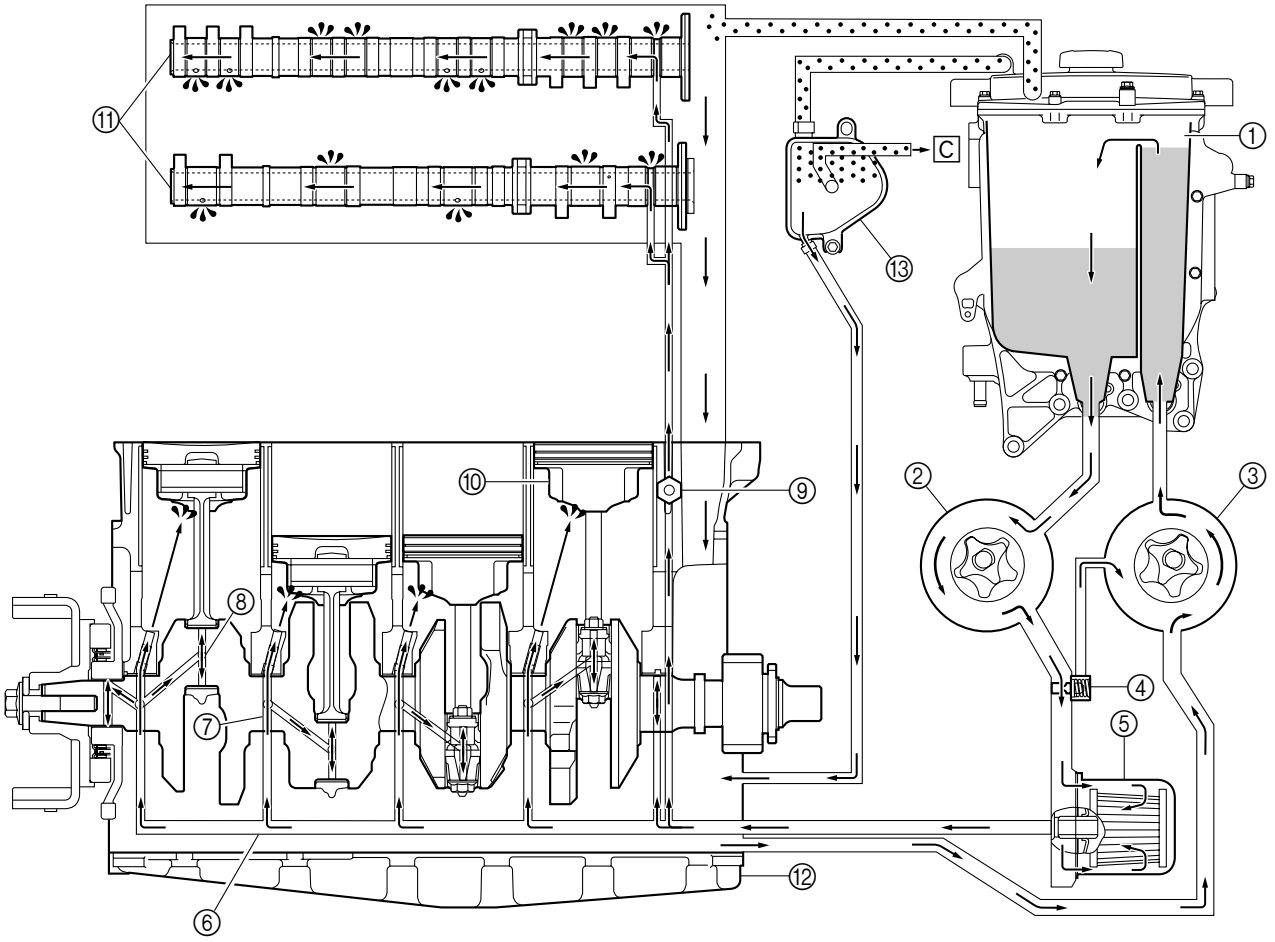

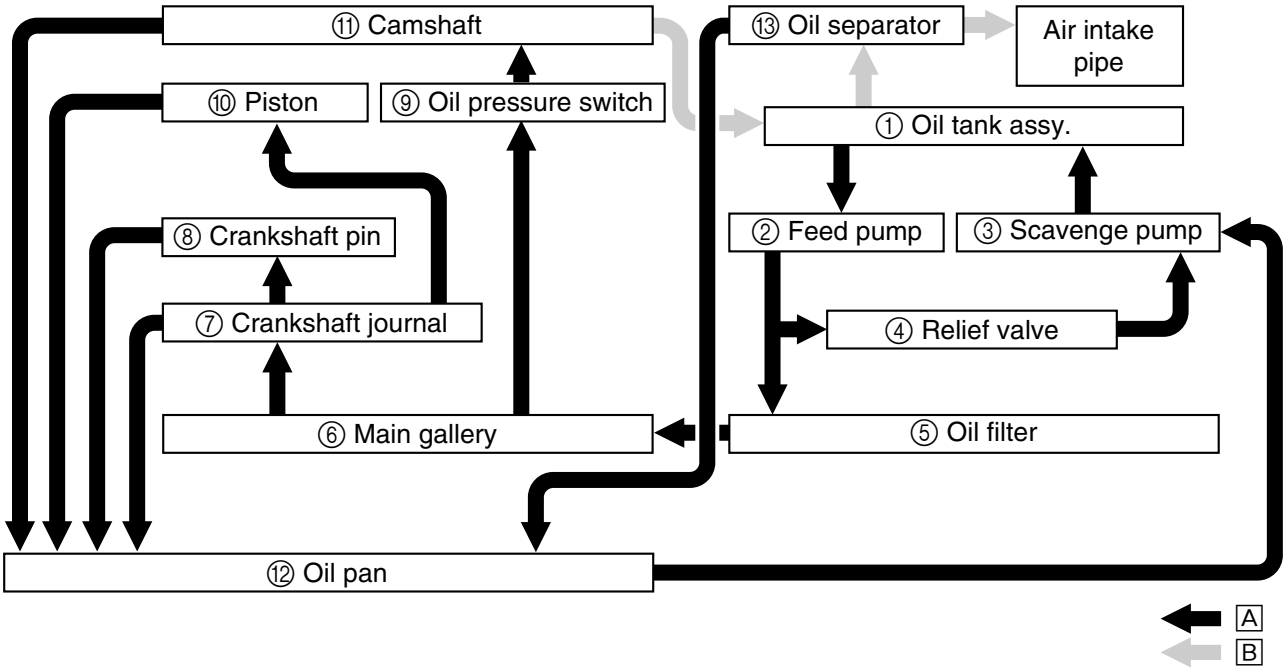

A Engine oil flow
B Blow-by gas flow
C To air intake pipe

Cooling system

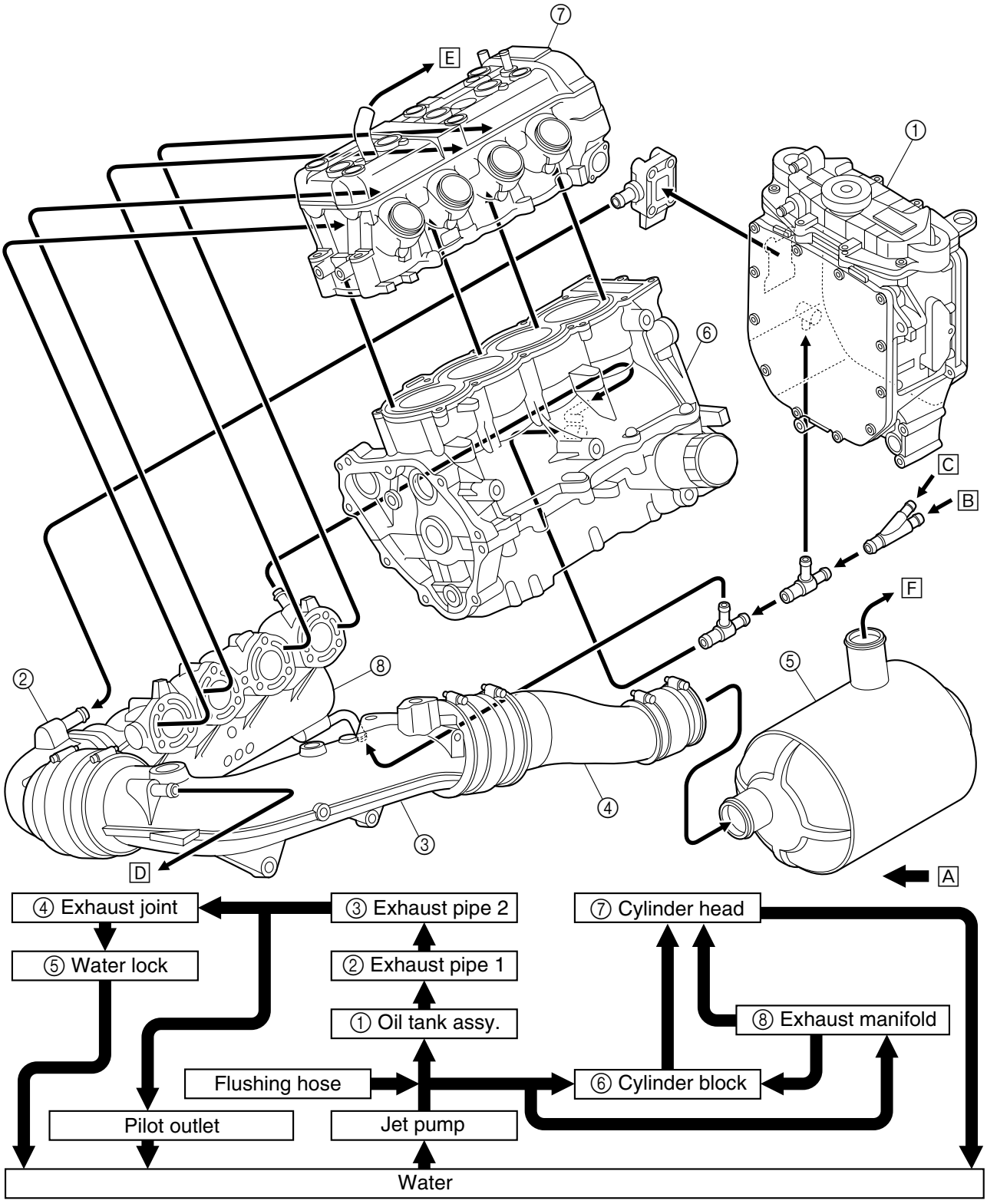

A Cooling water flow
B From jet pump
C From flushing hose
D To cooling water pilot outlet
E To transom plate
F To water tank

Cable and hose routing

Starboard bow view

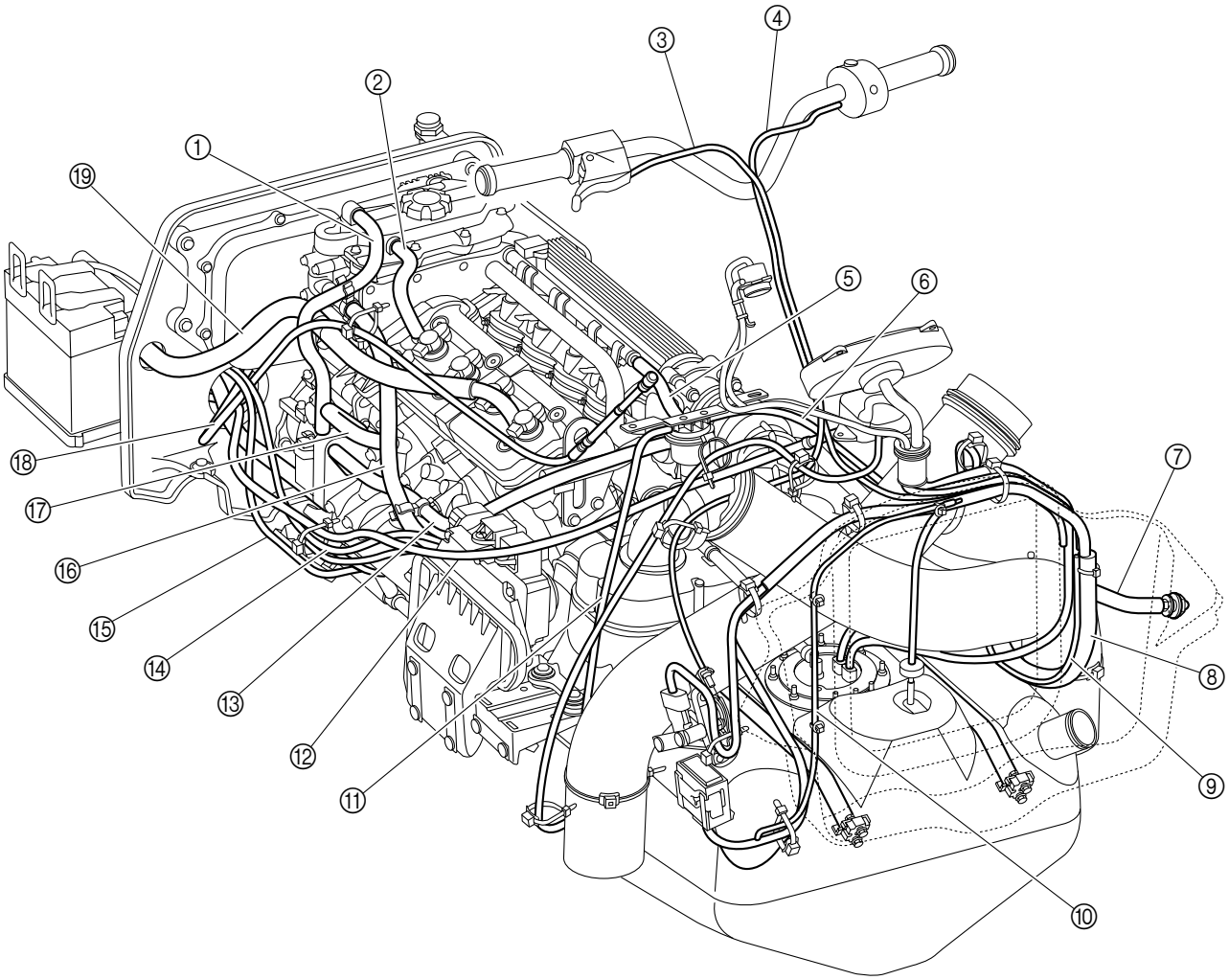

① Breather hose
(oil tank assy. to oil separator)
② Breather hose
(oil tank assy. to head cover)
③ Throttle cable
④ Left handlebar switch lead
⑤ Fuel hose (fuel tank to fuel rail)
⑥ Fuel tank breather hose
(water separator to fuel tank)
⑦ Cooling water pilot outlet hose
⑧ Wiring harness
⑨ Speed sensor lead
⑩ Remote control receiver antenna
(VX Cruiser and VX Deluxe)
⑪ Fuel tank breather hose
(water separator to ventilation socket)
⑫ Steering cable
⑬ Breather hose
(oil separator to air intake pipe)
⑭ Positive battery cable
⑮ Negative battery cable

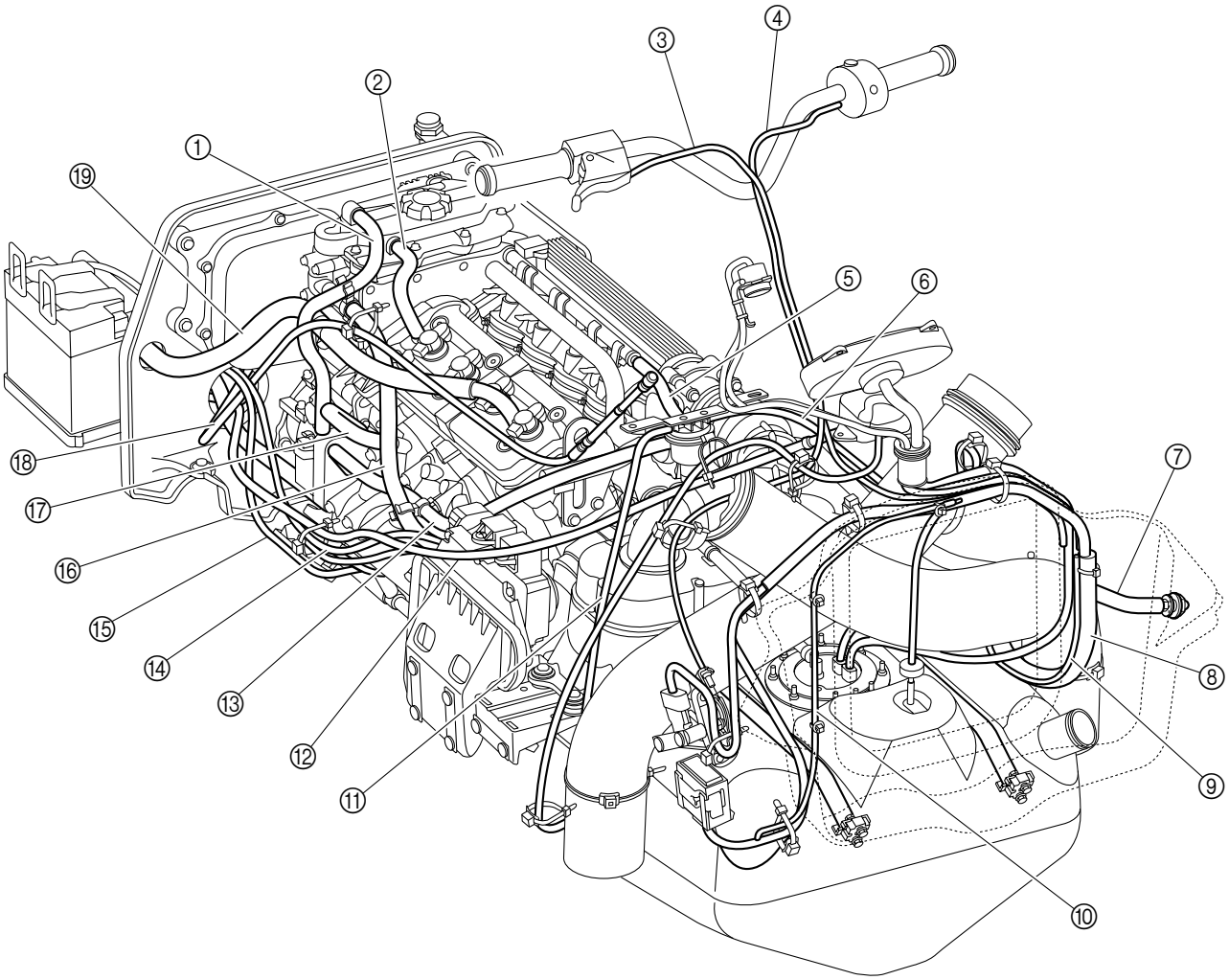

⑯ Cooling water hose
(water jacket to exhaust pipe 1)
⑰ Cooling water hose
(cylinder block to exhaust manifold)
⑱ Shift cable (VX Cruiser and VX Deluxe)
⑲ Cooling water hose
(head cover to transom plate)

Top view

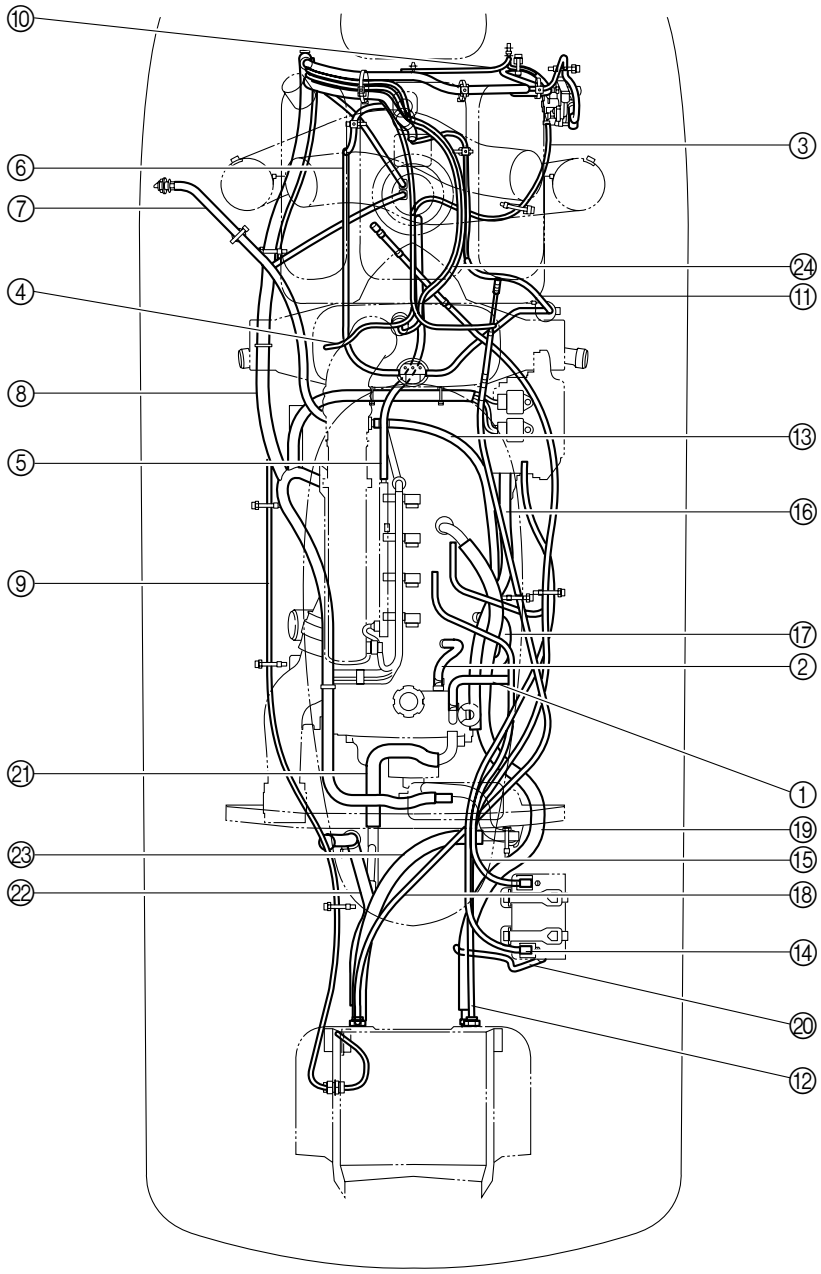

① Breather hose
(oil tank assy. to oil separator)
② Breather hose
(oil tank assy. to head cover)
③ Throttle cable
④ Left handlebar switch lead
⑤ Fuel hose (fuel tank to fuel rail)
⑥ Fuel tank breather hose
(water separator to fuel tank)
⑦ Cooling water pilot outlet hose
⑧ Wiring harness
⑨ Speed sensor lead
⑩ Remote control receiver antenna
(VX Cruiser and VX Deluxe)
⑪ Fuel tank breather hose
(water separator to ventilation socket)
⑫ Steering cable
⑬ Breather hose
(oil separator to air intake pipe)
⑭ Positive battery cable
⑮ Negative battery cable

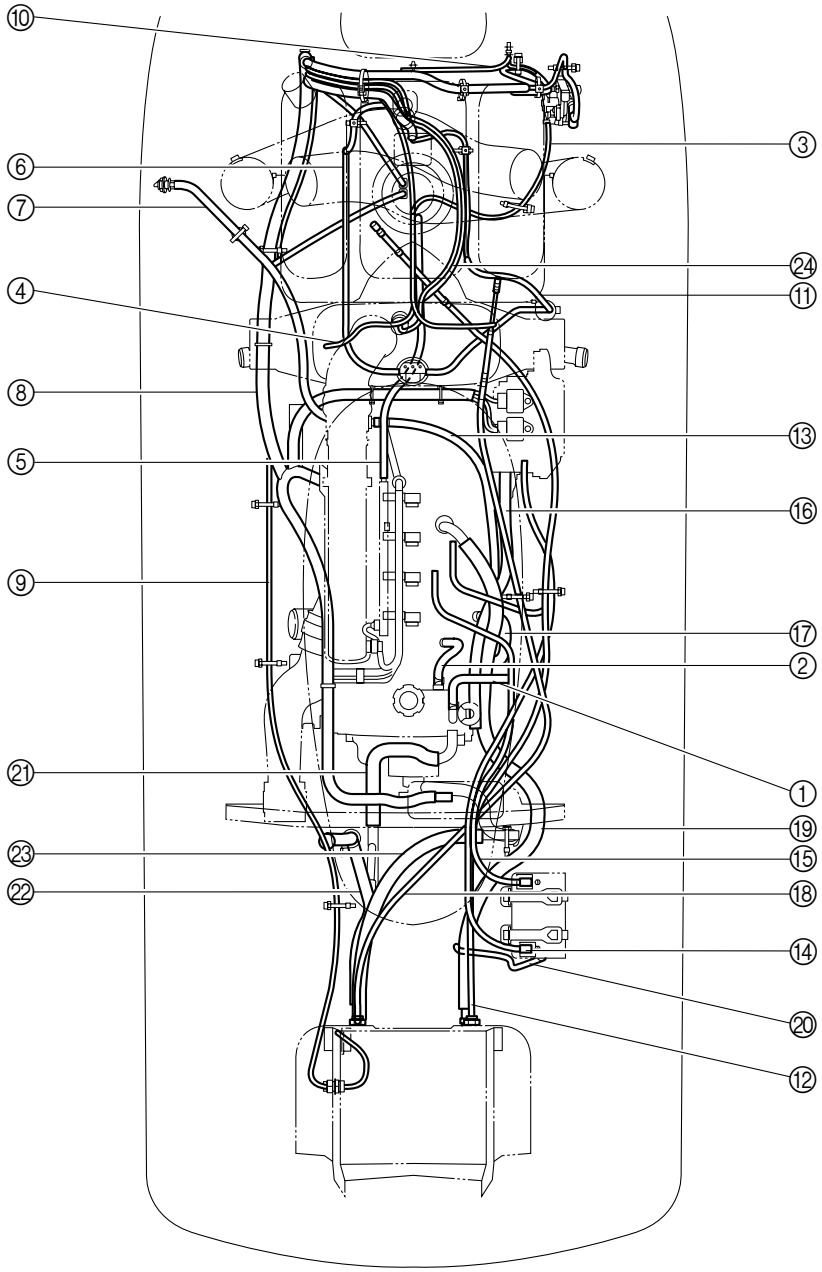

⑯ Cooling water hose
(water jacket to exhaust pipe 1)
⑰ Cooling water hose
(cylinder block to exhaust manifold)
⑱ Shift cable (VX Cruiser and VX Deluxe)
⑲ Cooling water hose
(head cover to transom plate)
⑳ Battery breather hose
㉑ Cooling water hose
(hose joint 1 to hose joint 2)
㉒ Flushing hose
㉓ Bilge hose (hose joint to transom plate)
㉔ Buzzer lead

Port view

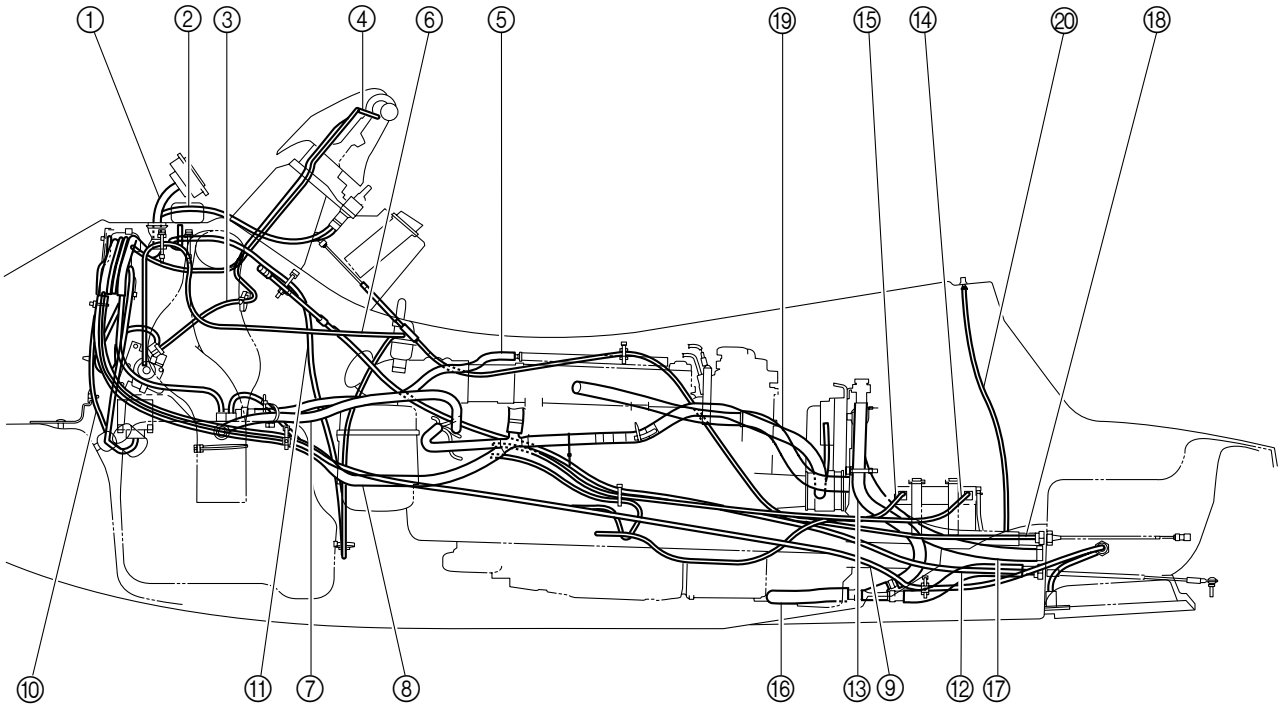

① Multifunction meter lead
② Buzzer lead
③ Throttle cable
④ Left handlebar switch lead
⑤ Fuel hose (fuel tank to fuel rail)
⑥ Fuel tank breather hose
(water separator to fuel tank)
⑦ Cooling water pilot outlet hose
⑧ Wiring harness
⑨ Speed sensor lead
⑩ Remote control receiver antenna
(VX Cruiser and VX Deluxe)
⑪ Fuel tank breather hose
(water separator to ventilation socket)
⑫ Steering cable
⑬ Flushing hose
⑭ Positive battery cable
⑮ Negative battery cable
⑯ Cooling water hose
(hose joint 1 to hose joint 2)
⑰ Bilge hose (hose joint to transom plate)

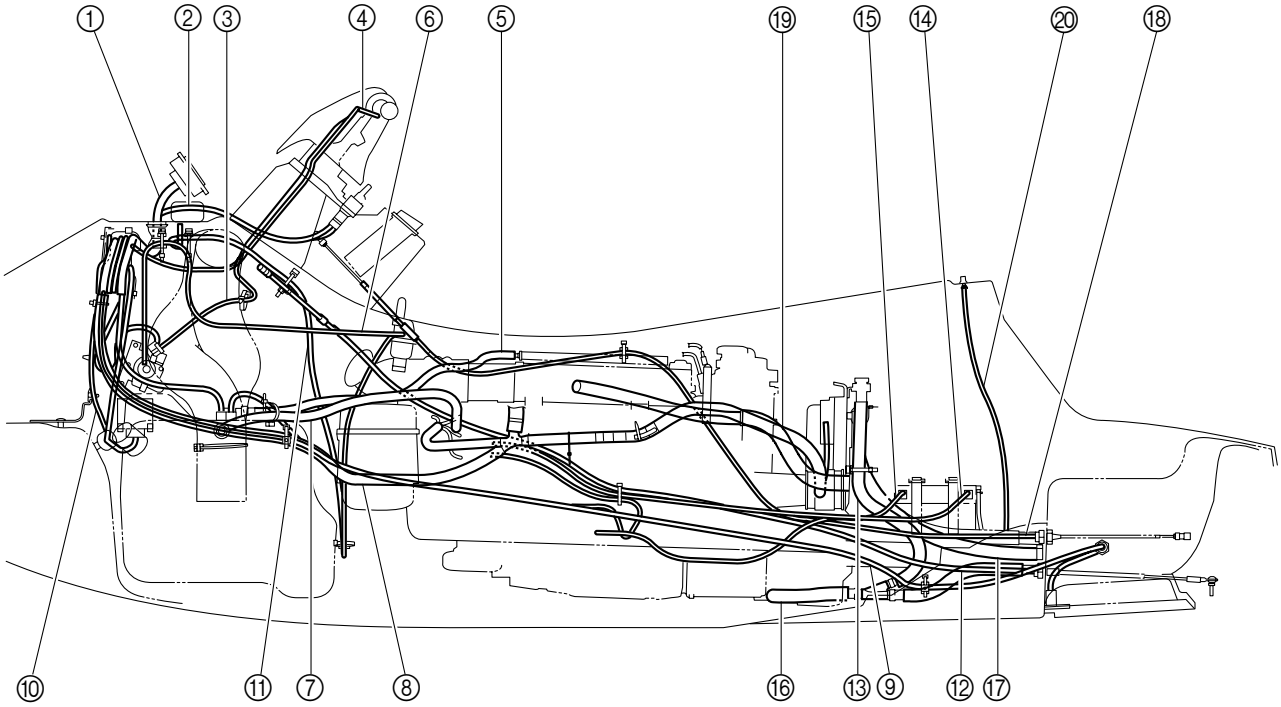

⑱ Shift cable (VX Cruiser and VX Deluxe)
⑲ Cooling water hose
(head cover to transom plate)
⑳ Battery breather hose

— MEMO —

Maintenance

Maintenance interval chart

The following chart should be considered strictly as a guide to general maintenance intervals. Depending on operating conditions, the maintenance intervals should be changed.

MAINTENANCE INTERVAL / ITEM		INITIAL	THEREAFTER EVERY				PAGE
		10 hours	50 hours		100 hours	200 hours	
			6 months	12 months	12 months	24 months	
Spark plugs	Check, clean, replace	○			○		3-6
Lubrication points	Lubricate				○		3-15
Intermediate housing	Lubricate	○			○		3-16
Fuel system	Check				○		3-5
Fuel tank	Check, clean				○		3-6
Engine idling speed	Check, adjust				○		3-11
Throttle shaft	Check				○		4-15
Water inlet strainer	Check, clean				○		3-12
Bilge strainer	Clean				○		3-14
Impeller	Check				○		3-12
Jet thrust nozzle angle	Check, adjust				○		3-12
Shift cable and reverse gate (*1)	Check, adjust				○		3-4
Throttle cable	Check, adjust	○			○		3-2
Stern drain plugs	Check, replace				○		3-14
Battery	Check, charge				○		3-13
Rubber coupling	Check					○	6-19
Engine mounts	Check					○	5-8
Nuts and bolts	Check	○			○		3-11
Air filter element	Check				○		4-13
Engine oil	Replace	○			○		3-10
Oil filter	Replace				○		3-10
Valve clearance	Check, adjust					○	3-8

(*1): VX Cruiser and VX Deluxe

Periodic service

Steering system

Steering master check

1. Turn the handlebar lock to lock and push it back and forth.

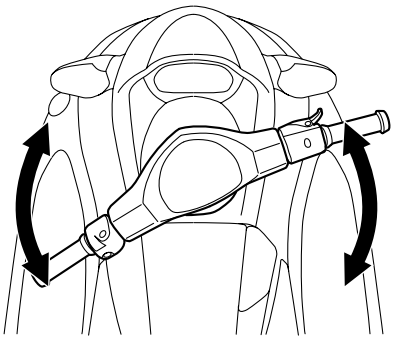

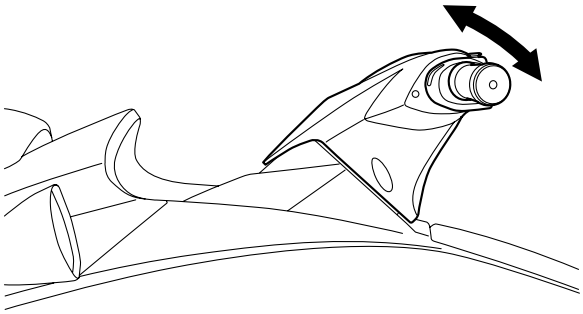

2. Check for excessive play of the handlebar. Check the bushings, bolts, and nuts if there is excessive play. See “Steering pad and handlebar cover” (8-1).

Throttle lever free play check

1. Measure the throttle lever free play ⓐ. Adjust if out of specification.

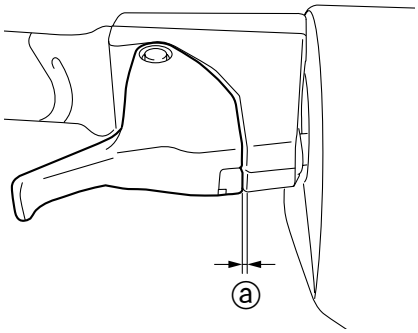

Throttle lever free play ⓐ: 4.0–7.0 mm (0.16–0.28 in)

Throttle lever free play adjustment

Follow all the steps if the throttle cable has been replaced, or if it has been disconnected from the APS.
Follow only steps 8–15 if the throttle cable has not been disconnected from the APS.

NOTICE

After adjusting the throttle lever free play, make sure that the throttle cable is not pulled when the handlebar is turned to the right and left.

1. Face the handlebar straight ahead.

2. Remove the service lid. See “Front hood” (8-8).

3. Slide the throttle cable end boot ① to the APS pulley end.

4. Check that the throttle cable installation length ⓐ is within specification.

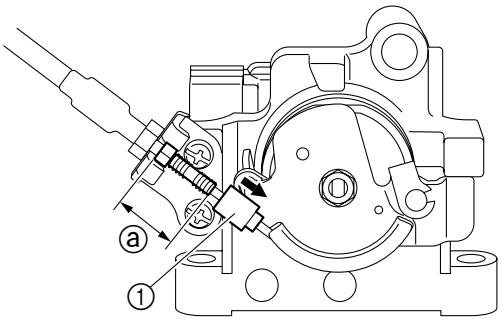

Throttle cable installation length ⓐ: 18.4 ± 1.0 mm (0.72 ± 0.04 in)

5. If the throttle cable installation length ⓐ is out of specification, loosen the locknut ②, and then turn the adjusting nut ③ to adjust the length.

6. Apply locking agent to the threads of the adjusting nut ③, and then tighten the locknut ② to the specified torque.

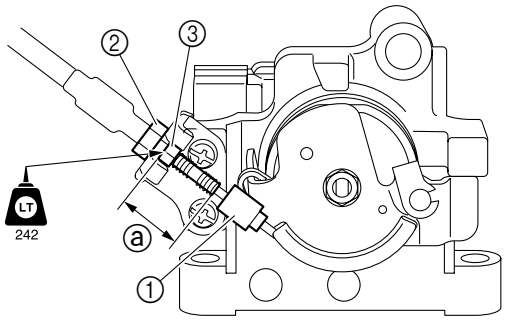

Locknut ②: 7 N·m (0.7 kgf·m, 5.2 ft·lb)

7. Slide the boot ① to its original position.

8. Remove the upper handlebar cover ④.

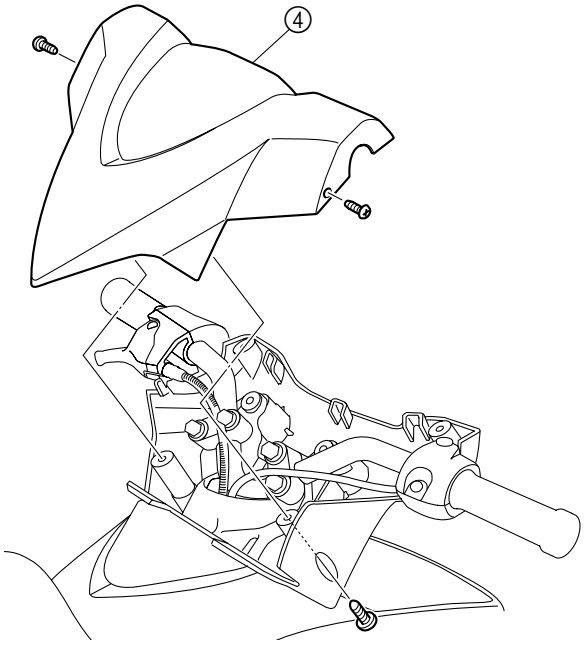

9. Slide the rubber cover ⑤ away from the throttle lever, and then loosen the locknut ⑥.

10. Turn the adjuster ⑦ in or out until the specified free play ⓑ is obtained.

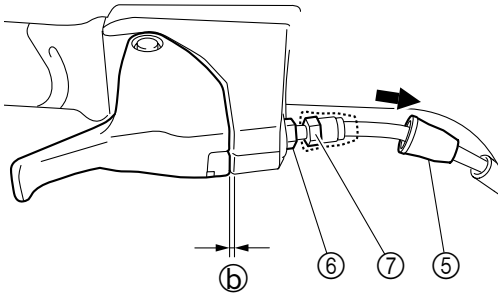

Turn in	Free play ⓑ is increased.
Turn out	Free play ⓑ is decreased.

Throttle lever free play ⓑ: 4.0–7.0 mm (0.16–0.28 in)

11. Tighten the locknut ⑥.

12. Squeeze the throttle lever ⑧ to the fully open position and check that the APS pulley stopper ⓒ contacts the fully open stopper ⓓ on the APS.

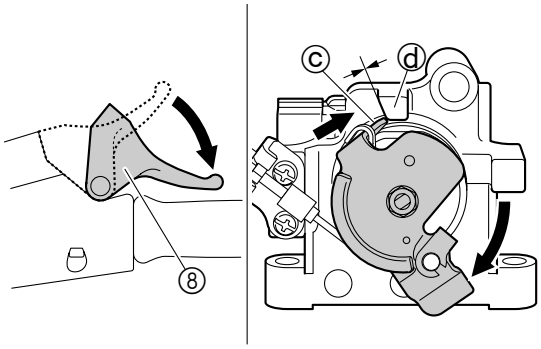

13. Release the throttle lever ⑧ and check that the APS pulley stopper ⓔ contacts the fully closed stopper ⓕ on the APS.

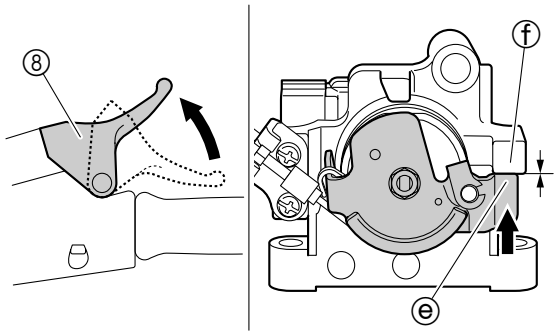

TIP:

If the throttle lever free play cannot be adjusted properly, check the throttle cable routing. If the throttle cable is routed properly, replace the throttle cable.

14. Slide the rubber cover ⑤ to its original position.

15. Install the upper handlebar cover ④, and then tighten the screws ⑨ and ⑩ to the specified torque.

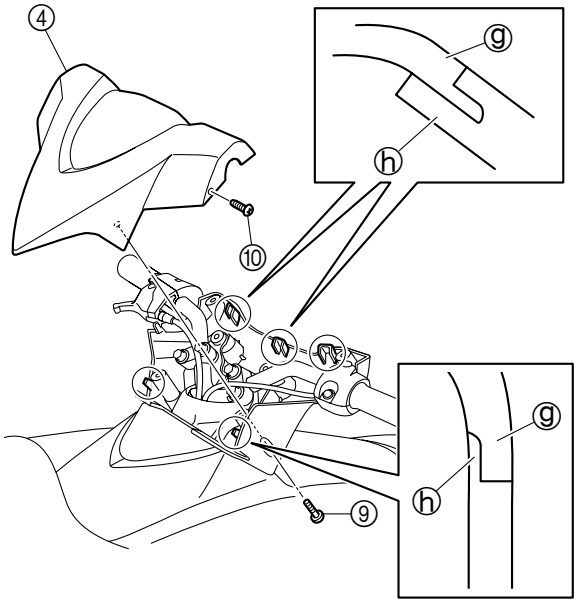

Upper handlebar cover screw (ø5 × 16 mm) ⑨:
Upper handlebar cover screw (ø4 × 10 mm) ⑩:
1 N·m (0.1 kgf·m, 0.7 ft·lb)

TIP:
Align the portion ⓖ on the upper handlebar cover with the portion ⓗ on the lower handlebar cover.

16. Install the service lid. See “Front hood” (8-8).

Shift cable check (VX Cruiser and VX Deluxe)

1. Set the shift lever to the reverse position.
2. Check that the reverse gate ① contacts the stopper ⓐ.

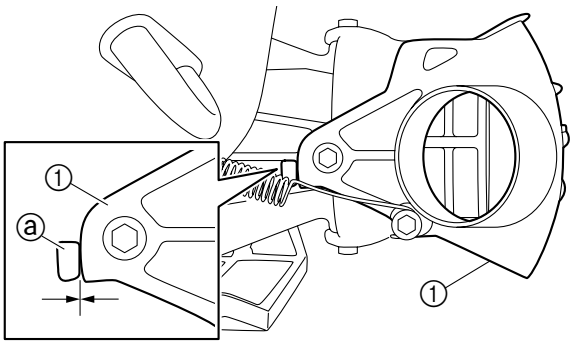

3. Adjust the shift cable joint if the reverse gate ① does not contact the stopper ⓐ.

Shift cable adjustment (VX Cruiser and VX Deluxe)

1. Set the shift lever to the reverse position.
2. Loosen the locknut ①.
3. Disconnect the shift cable joint ② from the ball joint ③.

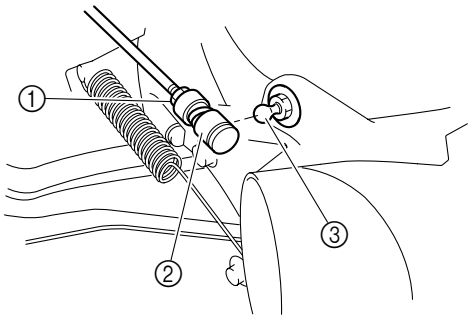

4. Position the reverse gate ④ so that it is contacting the stopper ⓐ.

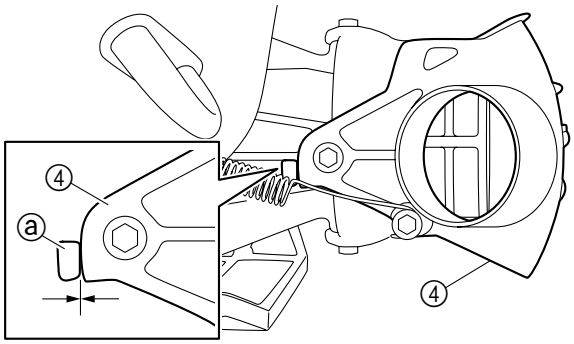

5. Turn the shift cable joint ② in or out until the specified distance ⓑ between the center of the joint and the center of the ball joint ③ is obtained. **WARNING! The shift cable joint must be screwed in more than 8 mm (0.31 in) ⓒ.**

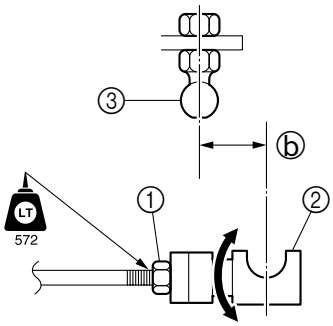

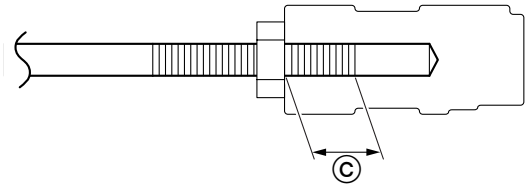

Turn in	Distance ⓑ is decreased.
Turn out	Distance ⓑ is increased.

Distance ⓑ: 7 mm (0.28 in)

6. Connect the shift cable joint ② to the ball joint ③, and then tighten the locknut ① to the specified torque.

Locknut ①: 4 N·m (0.4 kgf·m, 3.0 ft·lb)

Fuel system

⚠ WARNING

- **Before checking the fuel system, remove the battery and then remove the fuel filler cap to reduce any pressure inside the fuel tank.**
- **Always reduce the fuel pressure in the fuel line before checking the line or the fuel pipe. If the fuel pressure is not released, pressurized fuel could spray out.**
- **When removing fuel system parts, wrap them in a cloth and take care that no fuel spills into the engine compartment.**

Fuel pump module check

1. Remove the fuel pump module assy. See “Fuel pump module removal” (4-3).

2. Check the fuel pump filter ⓐ. Clean with kerosene or gasoline if clogged or contaminated.

3. Check the fuel pipe ⓑ (fuel pump module end). Replace the fuel pump module if cracked or damaged.

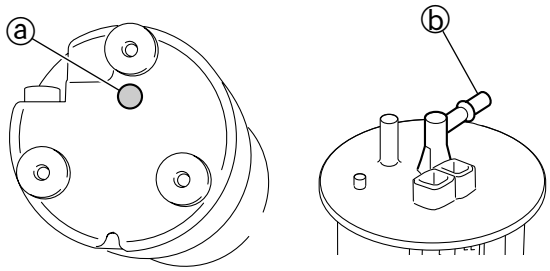

4. Install the fuel pump module assy. See “Fuel pump module installation” (4-8).

Fuel hose check

1. Disconnect the quick connector ①. See “Fuel pump module removal” (4-3).

2. Check the fuel hose ② and quick connector ①. Replace if cracked or damaged.

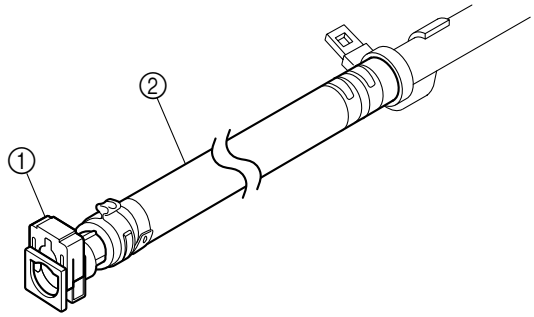

3. Connect the quick connector ①. See “Fuel pump module installation” (4-8).

Fuel rail check

1. Remove the fuel rail. See “Fuel hose disassembly” (4-5).

2. Check the fuel rail. Replace if cracked or damaged.

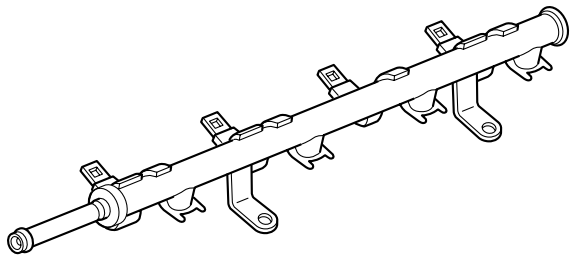

3. Install the fuel rail. See “Fuel hose assembly” (4-6).

Fuel filler neck and hose check

1. Remove the fuel filler hose ①, nut ②, fuel filler neck ③, and fuel filler cap ④, See “Fuel tank removal” (4-19).

2. Check the fuel filler cap ④, fuel filler neck ③, nut ②, and fuel filler hose ①. Replace if cracked or damaged.

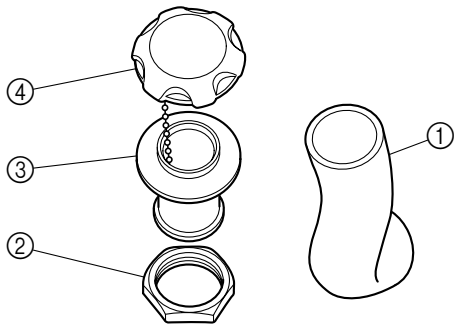

3. Install the fuel filler cap ④, fuel filler neck ③, nut ②, and fuel filler hose ①. See “Fuel tank installation” (4-21).

Fuel tank check

1. Check the fuel tank. Replace if cracked or damaged.

2. Check for water in the fuel tank. Extract the water and fuel if there is water in the fuel tank.

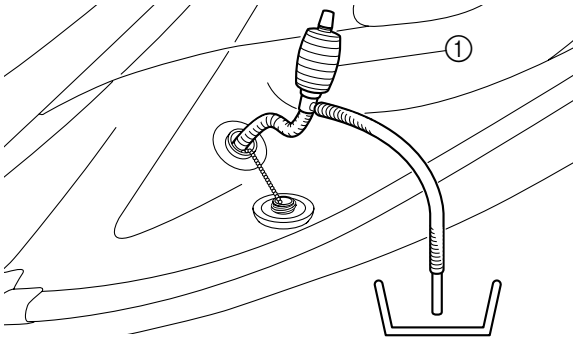

TIP:
Use a commercially available siphon pump ①.

Water separator check

1. Check the water separator ①. Drain the water if water has accumulated.

2. Check the O-ring of the drain plug ②. Replace the O-ring if cracked or damaged.

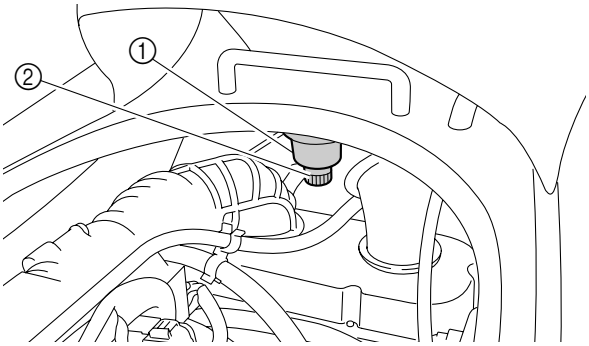

TIP:
To drain water from the water separator ①, loosen the drain plug ②.

Power unit

Spark plug check

1. Disconnect the ignition coil couplers ①, and then remove the ignition coils ② and spark plugs ③.

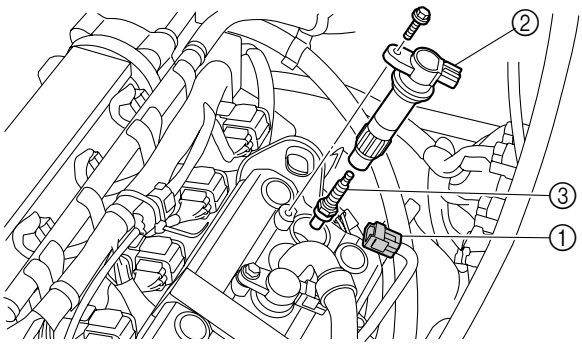

TIP:
Be careful not to get water or any other foreign substances in the spark plug holes.

2. Clean the electrodes ⓐ.

3. Check the electrodes ⓐ. Replace the spark plug if damaged or worn.

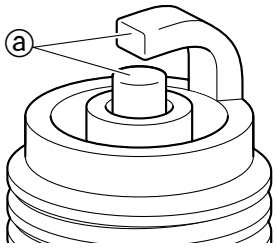

4. Measure the spark plug gap ⓑ. Replace if out of specification.

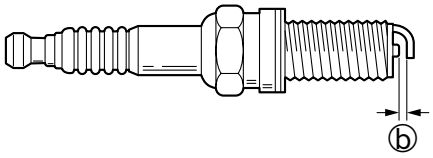

Specified spark plug (manufacturer): CR9EB (NGK) Spark plug gap ⓑ: 0.7–0.8 mm (0.028–0.031 in)

5. Tighten the spark plugs ③ to the specified torque.

6. Install the ignition coils ②, and then tighten the bolts ④ to the specified torque.

7. Connect the ignition coil couplers ①.

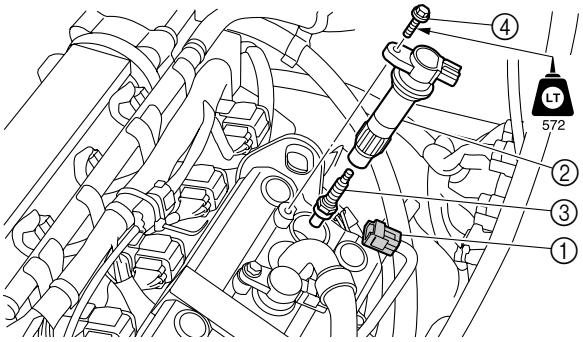

Spark plug ③: 13 N·m (1.3 kgf·m, 9.6 ft·lb) Ignition coil bolt ④: 8 N·m (0.8 kgf·m, 5.9 ft·lb)

TIP:
Before installing a spark plug, clean the gasket surface and spark plug surface.

Compression pressure measurement

NOTICE

When starting the engine to measure the compression pressure on land, make sure to connect a garden hose to the watercraft for proper water supply.

TIP:
Make sure that the battery voltage is more than 12 V.

1. Place the watercraft in a horizontal position.

2. Start the engine and warm it up for 6 minutes or more at engine idle speed.

TIP:
Warm up the engine an additional 5 minutes if the ambient temperature is 20 °C (68 °F) or less.

3. Stop the engine.

4. Disconnect the ignition coil coupler, and then remove the ignition coils, and spark plugs. See “Spark plug check” (3-6).

5. Install the special service tools ① and ②.

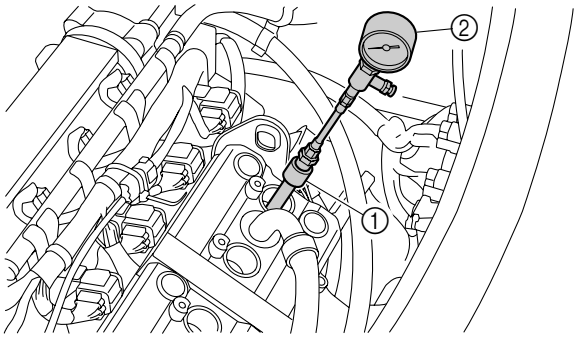

Compression gauge extension M10 ①: 90890-06582 Compression gauge ②: YU-33223/90890-03160

Compression pressure (reference data): 810 kPa (8.1 kgf/cm^2, 115 psi)

6. Crank the engine until the reading on the compression gauge stabilizes.

7. Measure the compression pressure for all cylinders according to steps 5–6.

8. If the compression pressure is below specification, squirt a few drops of engine oil into the cylinder and measure again.

Compression pressure (with engine oil added into the cylinder)	
Reading	Check
Higher than without engine oil	Piston ring and piston
Same as without engine oil	Valve clearance, valve, valve seat, cylinder head, and cylinder head gasket

9. Install the spark plugs and ignition coils, and then connect the ignition coil couplers. See “Spark plug check” (3-6).

Valve clearance measurement

TIP:
Measure the valve clearance when the engine is cold.

1. Remove the ignition coils, spark plugs, and cylinder head cover. See “Cylinder head cover removal” (5-60).

2. Install the special service tools ①, ②, and ③ into spark plug hole #1.

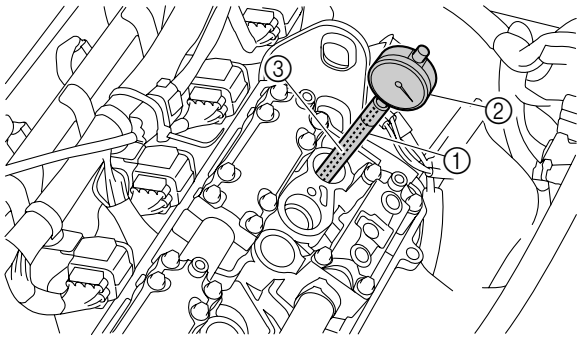

Dial gauge stand 173 ①: 90890-06583 Dial gauge stand set: YB-06585 Dial indicator gauge 0–5 mm ②: YU-03097 Dial gauge set ②: 90890-01252 Dial gauge needle 173 ③: 90890-06584

3. Position piston #1 at TDC by turning the exhaust camshaft sprocket clockwise.

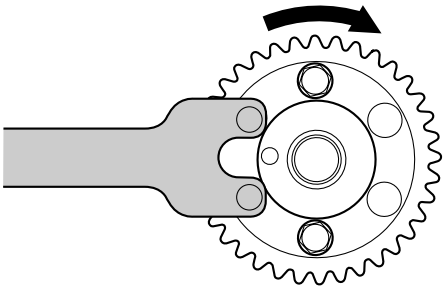

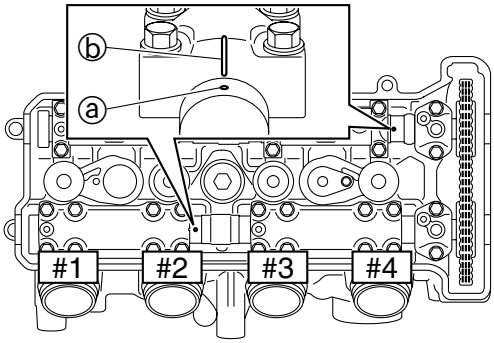

Camshaft wrench: 90890-06724

TIP:
Check that the punch marks ⓐ on the camshafts are aligned with the alignment marks ⓑ on the camshaft caps.

4. Measure the intake and exhaust valve clearances of the specified cylinders.

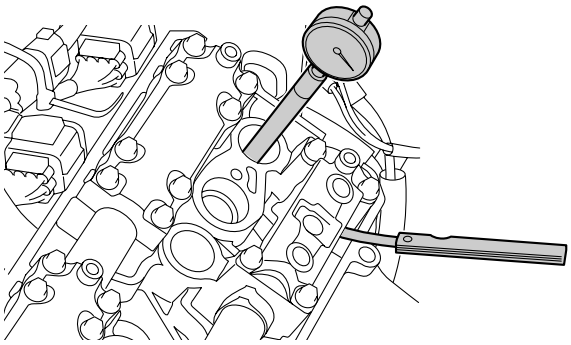

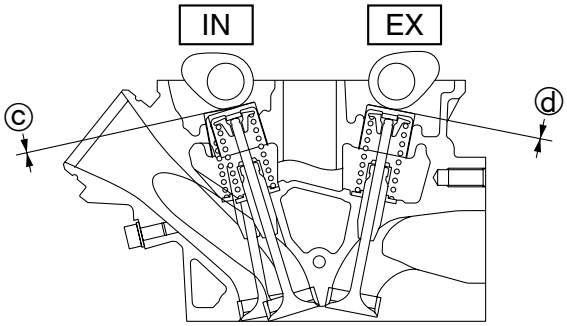

Valve clearance (cold)
Intake ⓒ:
0.11–0.20 mm (0.0043–0.0079 in)
Exhaust ⓓ:
0.25–0.34 mm (0.0098–0.0134 in)

	#1	#2	#3	#4
IN	O		O	
EX	O	O		

O :Specified cylinder

5. Install the special service tools ①, ②, and ③ into spark plug hole #4.

6. Position piston #4 at TDC by turning the exhaust camshaft sprocket 180° clockwise.

7. Measure the intake and exhaust valve clearances of the specified cylinders.

	#1	#2	#3	#4
IN		O		O
EX			O	O

O :Specified cylinder

8. Adjust the valve clearance if out of specification. See “Valve clearance adjustment” (5-68).

Engine oil level check

NOTICE

- **When starting the engine to check the oil level on land, make sure to connect a garden hose to the watercraft for proper water supply.**
- **Make sure that debris or water does not enter the oil filler hole.**

1. Place the watercraft in a horizontal position.

2. Start the engine and warm it up for 6 minutes or more at engine idle speed.

TIP:
Warm up the engine an additional 5 minutes if the ambient temperature is 20 °C (68 °F) or less.

3. Stop the engine.

4. Remove the oil tank filler cap ①, wipe the gauge clean, and then install the oil tank filler cap ① into the oil tank completely.

5. Remove the oil tank filler cap ① again to check that the oil level is between the minimum level mark ⓐ and maximum level mark ⓑ on the gauge.

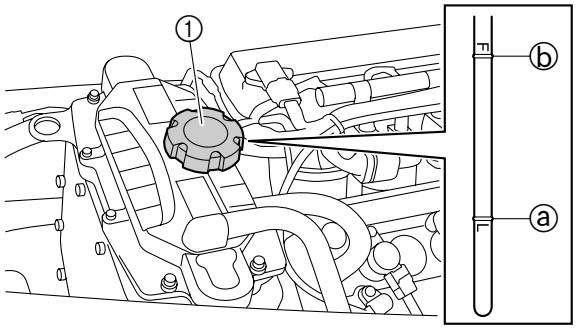

6. If the engine oil is below the minimum level mark ⓐ, add sufficient oil of the recommended type to raise it to the correct level.

7. If the engine oil is above the maximum level mark ⓑ, extract sufficient oil using an oil changer to lower it to the correct level.

Recommended engine oil:
API: SE, SF, SG, SH, SJ, or SL
SAE: 10W-30, 10W-40, 20W-40, or 20W-50

8. Install the oil tank filler cap ①.

Engine oil change

⚠ WARNING

Be careful when handling the engine oil to avoid burns. The engine oil is hot immediately after the engine is turned off.

NOTICE

- **When starting the engine to check the oil level on land, make sure to connect a garden hose to the watercraft for proper water supply.**
- **Make sure that debris or water does not enter the oil filler hole.**

1. Place the watercraft in a horizontal position.
2. Start the engine and warm it up for 6 minutes or more at engine idle speed.

TIP:

Warm up the engine an additional 5 minutes if the ambient temperature is 20 °C (68 °F) or less.

3. Stop the engine.
4. Remove the oil tank filler cap ①.
5. Insert the tube ② of an oil changer into the oil filler hole ③.
6. Operate the oil changer to extract the oil.

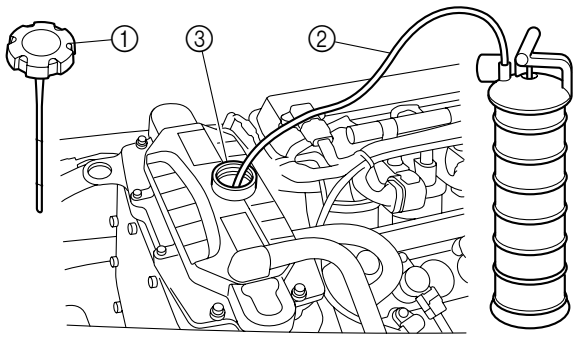

7. Fill the oil tank with the specified amount of the recommended engine oil through the oil filler hole ③.

Recommended engine oil:
API: SE, SF, SG, SH, SJ, or SL
SAE: 10W-30, 10W-40, 20W-40, or 20W-50
Engine oil quantity:
Total amount:
4.3 L (4.5 US qt, 3.8 Imp.qt)
Without oil filter replacement:
2.0 L (2.1 US qt, 1.8 Imp.qt)
With oil filter replacement:
2.2 L (2.3 US qt, 1.9 Imp.qt)

8. Install the oil tank filler cap ①.
9. Check the engine oil level. See “Engine oil level check” (3-9)

Oil filter replacement

1. Place a rag under the oil filter ①.
2. Remove the oil filter ①.

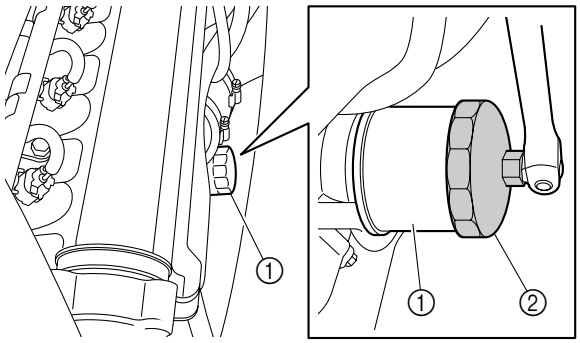

Oil filter wrench 64 ②:
YB-01426/90890-01426

3. Lubricate the O-ring ③ of a new oil filter with a thin coat of grease. ***NOTICE:*** **Make sure that the O-ring ③ is positioned correctly in the groove of the oil filter.**

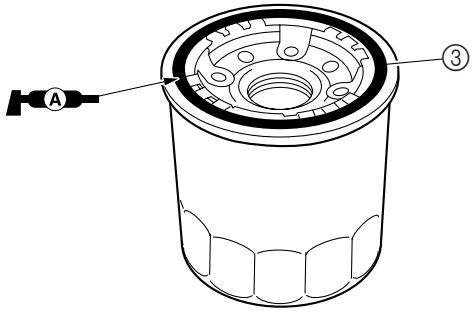

4. Tighten the oil filter to the specified torque.

Oil filter ①: 17 N·m (1.7 kgf·m, 12.5 ft·lb)

TIP:
Make sure to clean up any oil spills.

5. Check the engine oil level. See “Engine oil level check” (3-9).

Air filter element check

NOTICE

Do not start the engine with the air filter element removed, otherwise the engine could be damaged.

1. Remove the air filter case cover and air filter element. See “Air filter case removal” (4-12).

2. Check the air filter element. Replace if damaged or there is dirt.

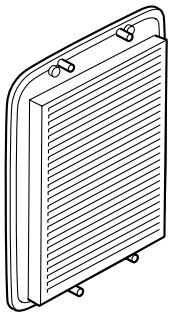

3. Install the air filter element and air filter case cover. See “Air filter case installation” (4-13).

Trolling speed check

1. Place the watercraft in the water.

2. Start the engine and warm it up for 6 minutes or more.

TIP:
Warm up the engine an additional 5 minutes if the ambient temperature is 20 °C (68 °F) or less.

3. Check the trolling speed using the tachometer of the multifunction meter or using the YDIS. Check the throttle cable, APS, or throttle body assembly if out of specification.

Trolling speed: 1600–1700 r/min

Engine mount, stopper, and spacer check

1. Remove the engine unit. See “Engine unit removal” (5-5).

2. Check the engine mounts ①. Replace if cracked or damaged.

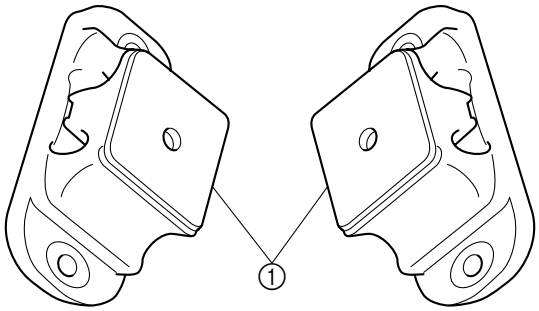

TIP:
- Make a note of the position of each engine mount so that it can be installed in its original place.
- When replacing the engine mounts, make sure to check the coupling clearance.

3. Check the stoppers ② and spacers ③. Replace if cracked or damaged.

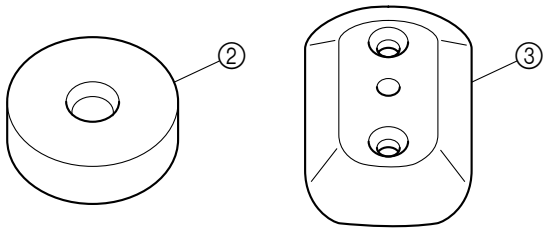

4. Install the engine unit. See “Engine unit installation” (5-8).

Nut and bolt check

1. Check the engine, deck, and hull for loose bolts and nuts. Tighten if loose. See “Specified tightening torque” (2-11).

Jet pump unit

Impeller check

⚠ WARNING

Make sure to remove the battery before checking the jet pump unit.

1. Remove the jet pump unit. See “Jet pump unit removal” (6-4).
2. Check the impeller ①. Replace if damaged.
3. Measure the impeller-to-housing clearance ⓐ. Measure the impeller housing inside diameter if the impeller-to-housing clearance ⓐ is out of specification. See “Impeller housing check” (6-10).

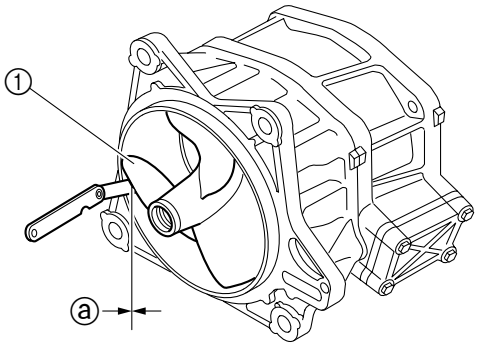

Impeller-to-housing clearance ⓐ: 0.35–0.45 mm (0.014–0.018 in)

4. Install the jet pump unit. See “Jet pump unit installation” (6-4).

Water inlet strainer check

1. Remove the water inlet strainer cover ① and water inlet strainer ②. See “Nozzle, impeller housing, and impeller duct assy.” (6-7).
2. Check the water inlet strainer ②. Clean if contaminated. Replace if cracked or damaged.

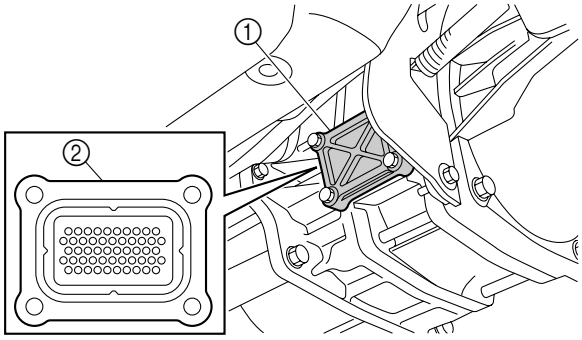

3. Install the water inlet strainer ② and water inlet cover ①. See “Nozzle, impeller housing, and impeller duct assy.” (6-7).

Jet thrust nozzle steering angle check

1. Turn the handlebar lock to lock.
2. Measure distances ⓐ and ⓑ. Adjust if out of specification.

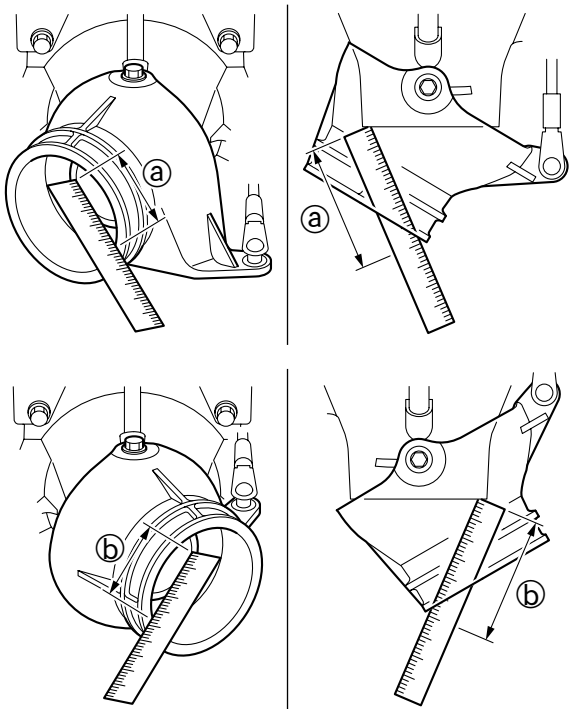

Difference of distances ⓐ and ⓑ: Maximum 5 mm (0.2 in)

Jet thrust nozzle steering angle adjustment

1. Remove the service lid. See “Front hood” (8-8).
2. Loosen the locknut ①.

3. Disconnect the steering cable joint ② from the ball joint ③.

4. Turn the steering cable joint ② in or out to adjust distances ⓐ and ⓑ. **WARNING! The steering cable joint must be screwed in more than 8 mm (0.31 in) ⓒ.**

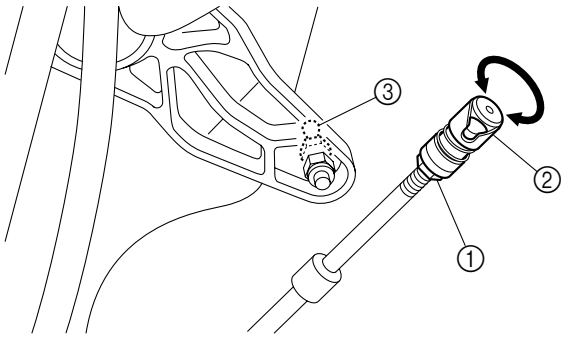

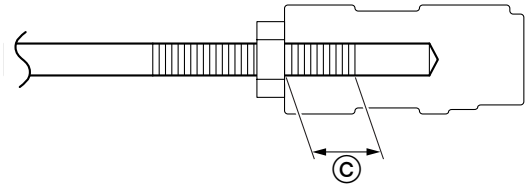

Turn in	Distance ⓐ is increased.
Turn out	Distance ⓑ is increased.

5. Connect the steering cable joint ② to the ball joint ③, and then tighten the locknut ① to the specified torque.

Locknut ①: 7 N·m (0.7 kgf·m, 5.2 ft·lb)

6. Check the difference of distances ⓐ and ⓑ again.

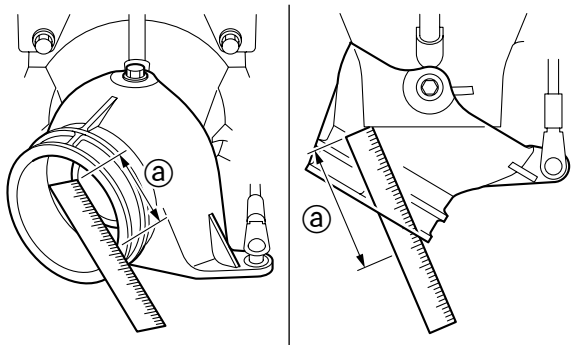

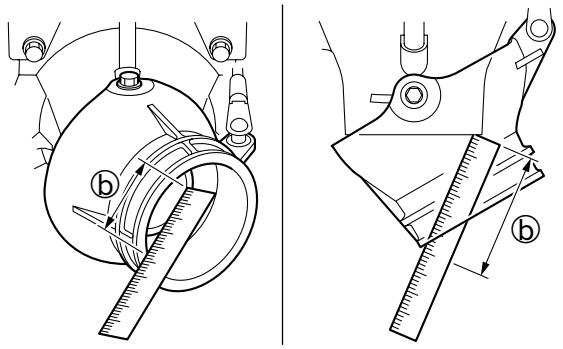

7. If the jet thrust nozzle steering angle cannot be properly adjusted using the cable joint at the steering master end, adjust the cable joint at the jet pump end so that the difference of distances ⓐ and ⓑ is within specification. See “Steering cable installation (jet pump end)” (8-18).

8. Install the service lid. See “Front hood” (8-8).

Electrical

Battery check

⚠ WARNING

Battery electrolyte is poisonous and dangerous, causing severe burns, etc. Electrolyte contains sulfuric acid. Avoid contact with skin, eyes or clothing.
Antidotes
External: Flush with water.
Internal: Drink large quantities of water or milk. Follow with milk of magnesia, beaten egg or vegetable oil. Call physician immediately.
Eyes: Flush with water for 15 minutes and get prompt medical attention.
Batteries produce explosive gases. Keep sparks, flame, cigarettes, etc., well away. If using or charging the battery in an enclosed space, make sure that it is well ventilated. Always shield your eyes when working near batteries.
KEEP OUT OF THE REACH OF CHILDREN.

NOTICE

Be careful not to place the battery on its side.
Make sure to remove the battery from the battery compartment when adding battery electrolyte or charging the battery.
When checking the battery, make sure the breather hose is connected to the battery and not obstructed.

1. Disconnect the negative battery cable ①, positive battery cable ②, and battery breather hose ③. ***NOTICE:*** **When removing the battery, disconnect the negative battery cable first.**

2. Remove the bands ④ and battery ⑤.

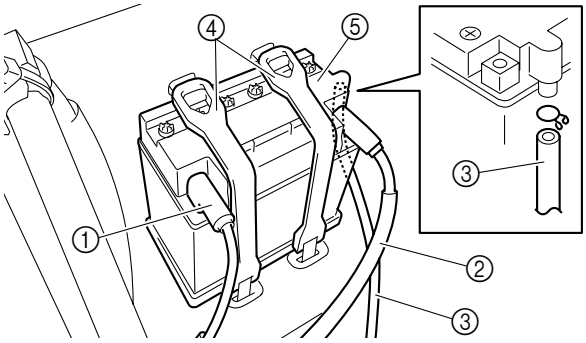

3. Check the battery electrolyte level. If the level is at or below the minimum level mark ⓐ, add distilled water until the level is between the maximum level mark ⓑ and minimum level mark ⓐ.

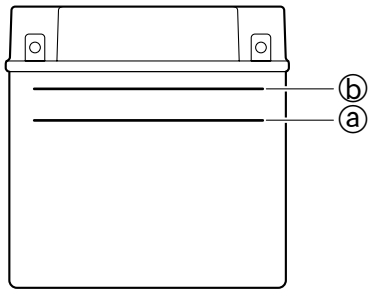

4. Check the specific gravity of the electrolyte. Charge the battery if below specification.

Specific gravity at 20 °C (68 °F): 1.265

5. Install the battery ⑤ and bands ④.

6. Connect the battery breather hose ③. ***NOTICE:*** **Make sure that the battery breather hose ③ is properly connected and is not obstructed.**

7. Connect the positive battery cable ②, and negative battery cable ①. ***NOTICE:*** **Connect the positive battery cable ② to the battery terminal first.**

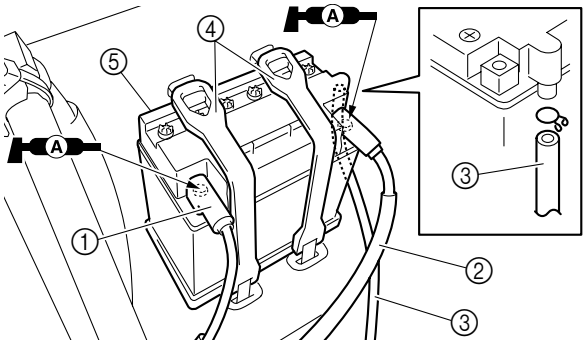

TIP:
Apply water resistant grease to the terminals to minimize corrosion.

Hull and hood

Bilge strainer check

1. Remove the bilge strainer case ①.

2. Check the bilge strainer. Clean if contaminated. Replace if cracked or damaged.

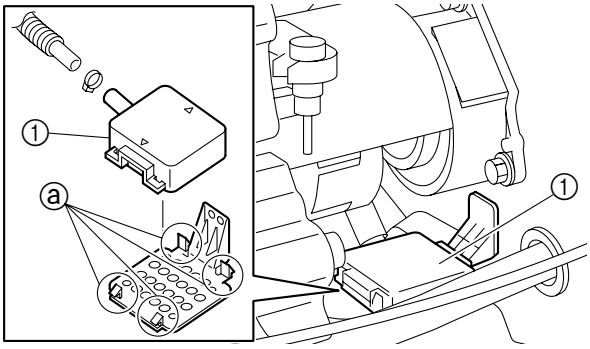

TIP:
Remove the bilge strainer case ① by pushing the hooks ⓐ on the bilge strainer inward.

3. Install the bilge strainer case ①.

Drain plug check

1. Check the O-ring ① of each drain plug ②. Replace if cracked or damaged.

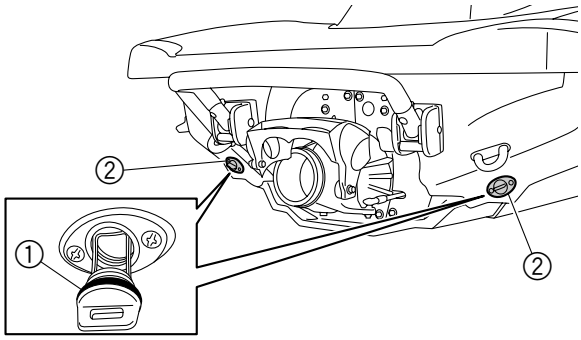

Lubrication points

Throttle valve lubrication

1. Loosen the clamp ①, and then disconnect the air intake pipe ②.

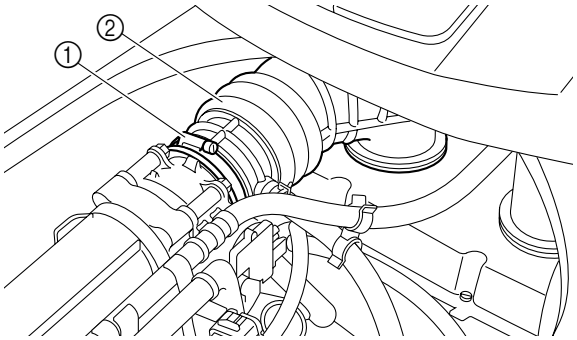

2. Spray a rust inhibitor into the throttle valve opening ③.

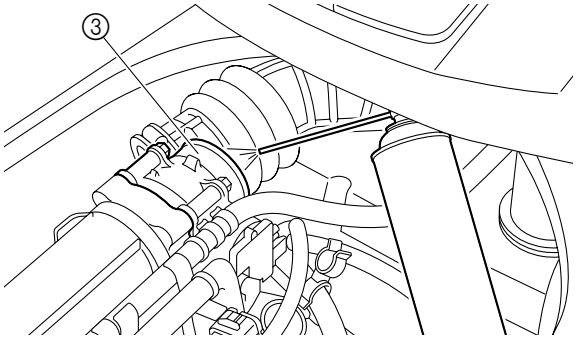

Recommended lubricant: Rust inhibitor

3. Connect the air intake pipe ②, and then tighten the clamp ①.

Air intake pipe clamp ①: 2.0 N·m (0.2 kgf·m, 1.5 ft·lb)

Throttle cable (handlebar end) lubrication

1. Remove the upper handlebar cover, and then disconnect the outer cable of the throttle cable. See “Throttle lever free play adjustment” (3-2).
2. Lubricate the throttle cable (handlebar end)

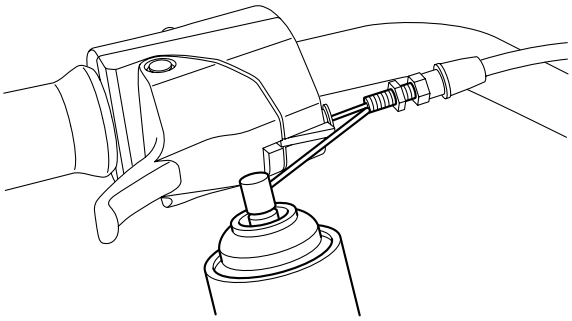

Recommended lubricant: Rust inhibitor

TIP:
After lubricating the throttle cable, make sure to adjust the throttle lever free play. See “Throttle lever free play adjustment” (3-2).

3. Connect the outer cable, and then install the upper handlebar cover. See “Throttle lever free play adjustment” (3-2).

Throttle cable (APS end) and return spring lubrication

1. Lubricate the throttle cable (APS end) and return spring.

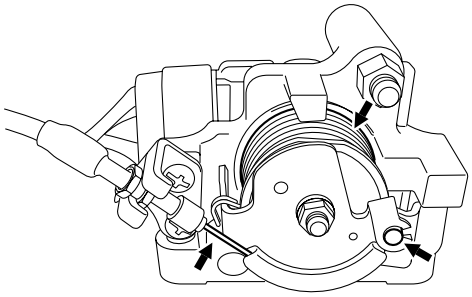

Recommended lubricant: Yamaha grease A

Nozzle pivot shaft and steering cable lubrication

1. Lubricate the nozzle pivot shaft and steering cable.

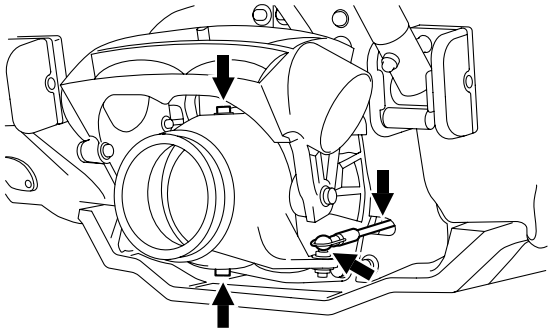

Recommended lubricant:
Yamaha grease A

Steering cable and steering cable joint lubrication

1. Lubricate the steering cable and steering cable joint.

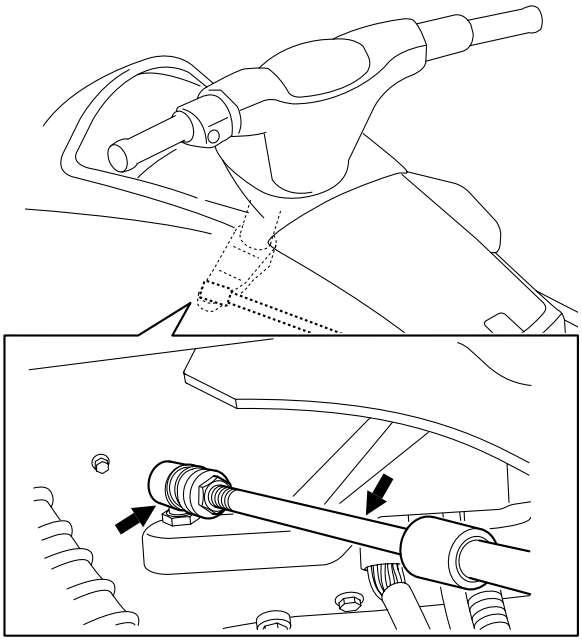

Recommended lubricant:
Yamaha grease A

TIP:
Disconnect the joint and apply a small amount of grease.

Shift lever assy., shift cable, and shift cable joint lubrication (VX Cruiser and VX Deluxe)

1. Remove the engine hatch cover. See “Multifunction meter and engine hatch cover” (8-11).
2. Lubricate the shift lever assy., shift cable, and shift cable joint.

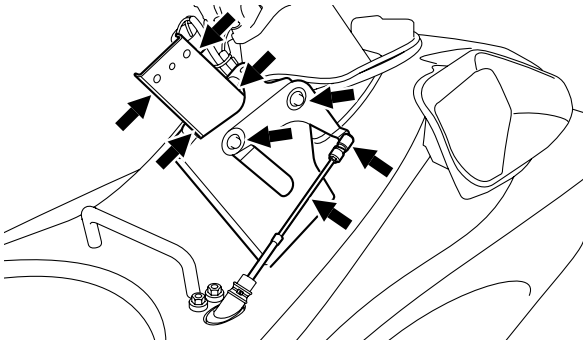

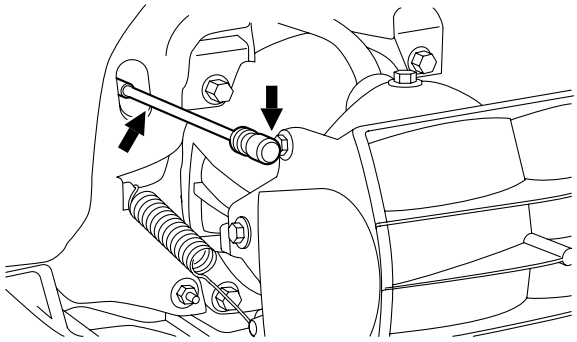

Recommended lubricant:
Yamaha grease A

3. Install the engine hatch cover. See “Multifunction meter and engine hatch cover” (8-11).

TIP:
Disconnect the joint and apply a small amount of grease.

Intermediate housing lubrication

1. Lubricate the intermediate housing ① through the grease nipple ②.

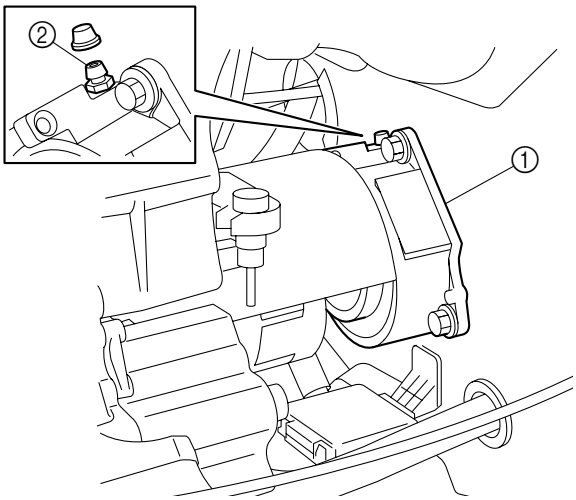

Recommended lubricant: Yamaha grease A

Fuel system

Fuel pump module, fuel hose, and fuel rail

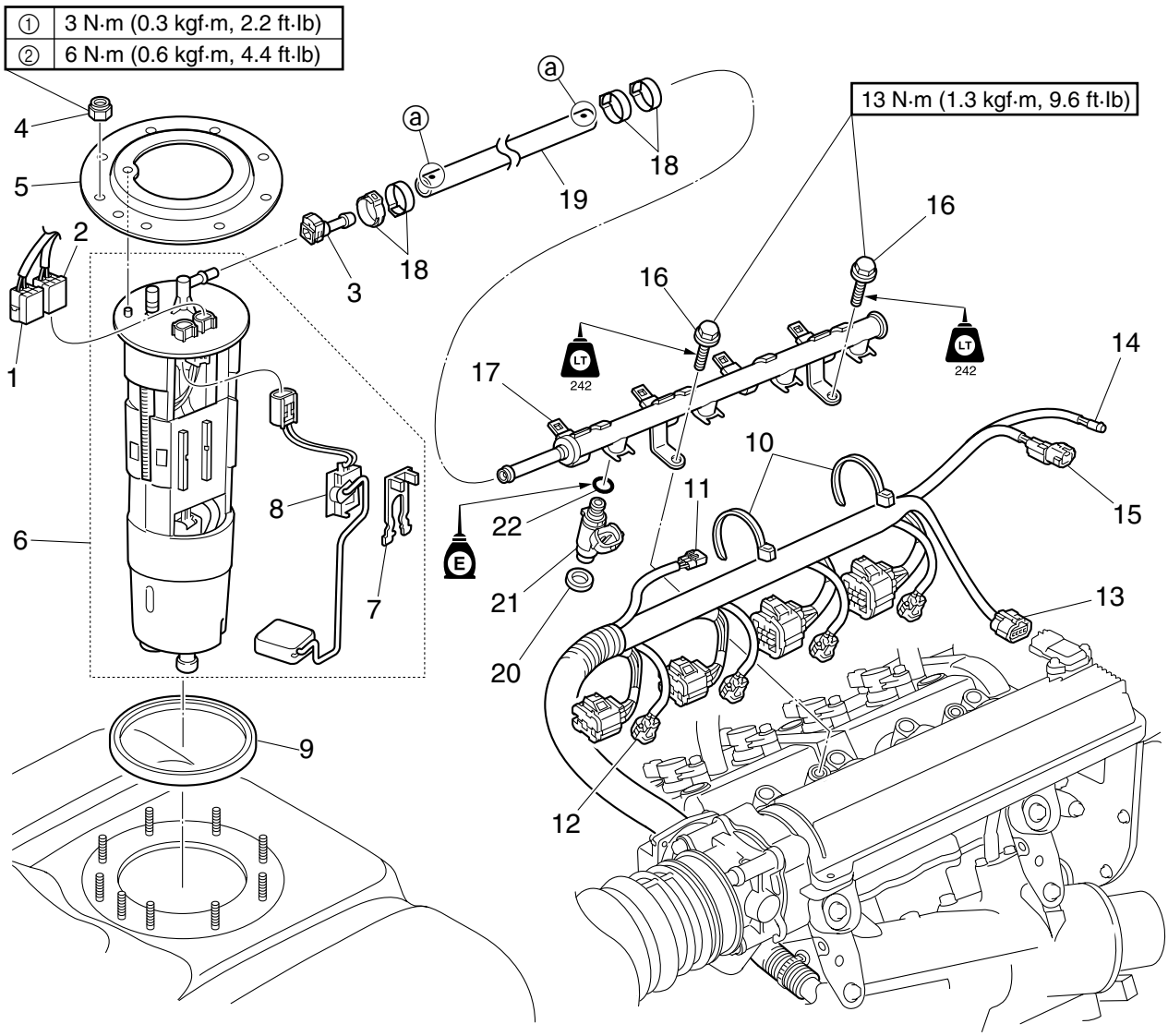

No.	Part name	Q'ty	Remarks
1	Fuel sender coupler	1	
2	Fuel pump module coupler	1	
3	Quick connector	1	
4	Nut	9	
5	Retainer	1	
6	Fuel pump module assy.	1	
7	Stopper	1	
8	Fuel sender	1	
9	Packing	1	**Not reusable**
10	Band	2	**Not reusable**
11	Cam position sensor coupler	1	
12	Fuel injector coupler	4	
13	Sensor assy. coupler	1	
14	Oil pressure switch coupler	1	
15	Thermoswitch (exhaust) coupler	1	
16	Bolt	2	M8 × 17 mm

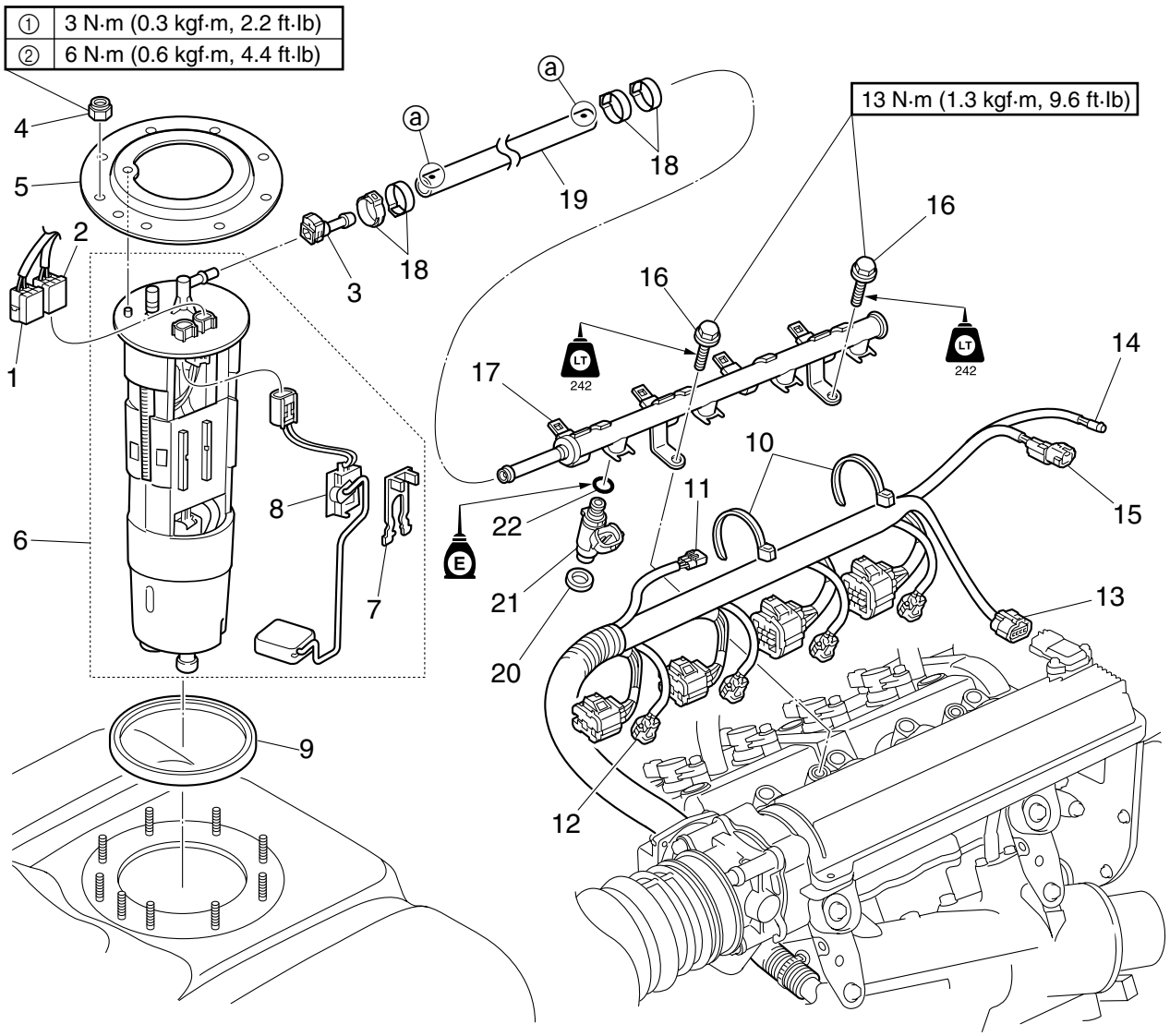

No.	Part name	Q'ty	Remarks
17	Fuel rail	1	
18	Clamp	4	**Not reusable**
19	Fuel hose	1	ⓐ White paint mark
20	Gasket	4	**Not reusable**
21	Fuel injector	4	
22	O-ring	4	**Not reusable**

Fuel pump module removal

WARNING

Before checking the fuel system, remove the battery, and then remove the fuel filler cap to reduce any pressure inside the fuel tank.

1. Remove the service lid. See “Front hood” (8-8).

2. Disconnect the fuel sender coupler ⓐ and fuel pump module coupler ⓑ.

3. Spread apart the ends of the retainer ⓒ, and then pull the retainer up.

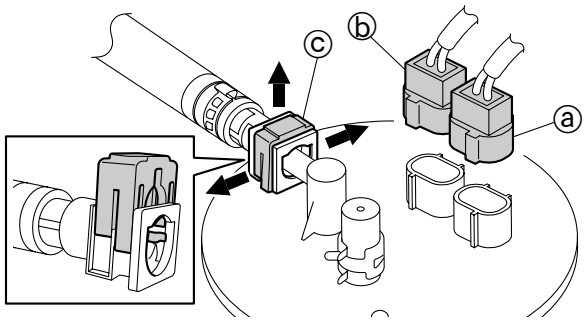

4. Disconnect the quick connector ① from the fuel pipe ⓓ directly. **WARNING! Make sure to disconnect the quick connector slowly, otherwise pressurized fuel could spray out.**

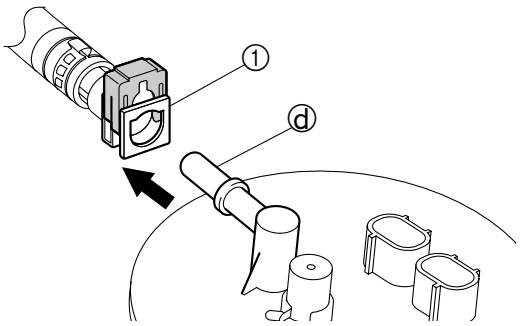

TIP:
Make sure to clean up any fuel spills.

5. Cover the quick connector and fuel pipe with plastic bags ② to protect them from dirt.

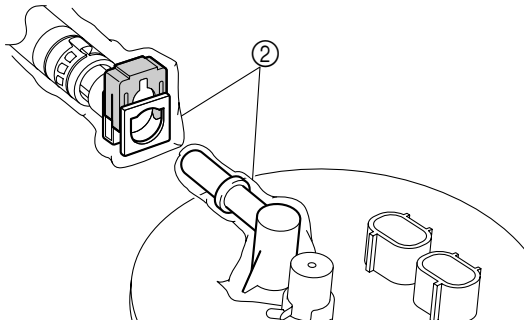

6. Loosen the nuts in the order [1], [2], and so on, and then remove the retainer ③.

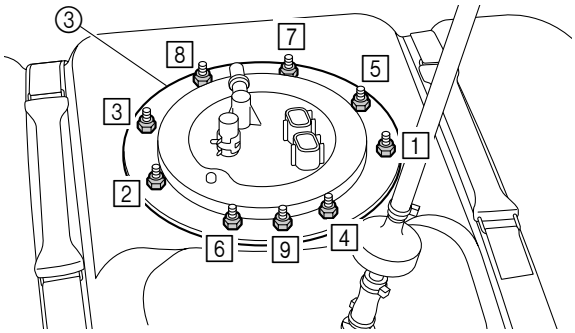

7. Remove the fuel pump module assy. ④. ***NOTICE:*** **When removing the fuel pump module assy. ④, make sure that the rubber caps ⓔ do not come off.**

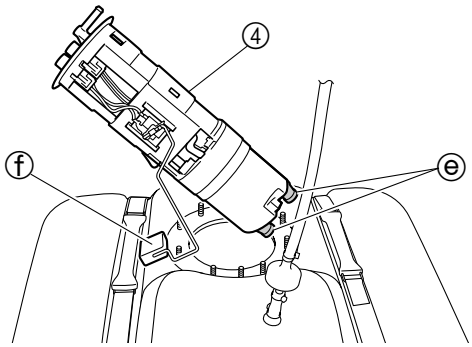

TIP:
Remove the fuel pump module assy. ④ at an angle so that the float ⓕ does not catch on the fuel tank.

Fuel sender removal

1. Disconnect the fuel sender coupler ⓐ.

2. Squeeze the hooks ⓑ on the stopper ①, and then slide the stopper in direction [A] to remove it.

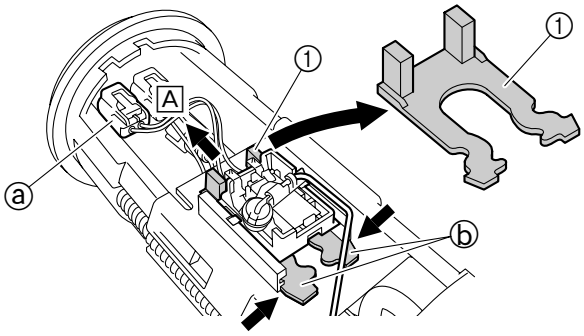

3. Push the tabs ⓒ on the fuel sender ②, and then slide the sender in direction B to remove it.

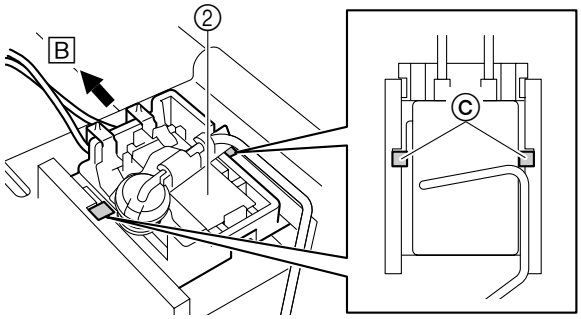

Fuel pump module check

NOTICE

Do not disassemble the fuel pump module.

1. Check the fuel pump module ①. Replace if cracked or damaged.

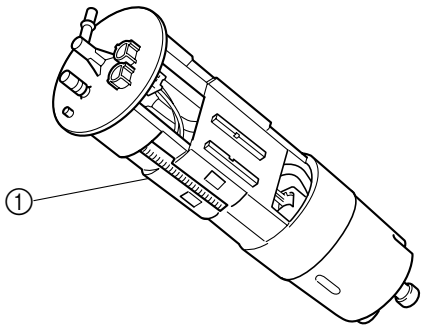

2. Check the fuel pump filter ⓐ. Clean with kerosene or gasoline if clogged or contaminated.

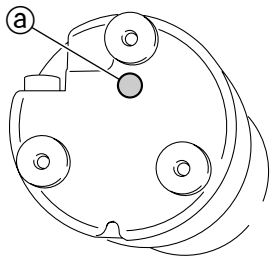

Fuel sender installation

1. Install the fuel sender ①.

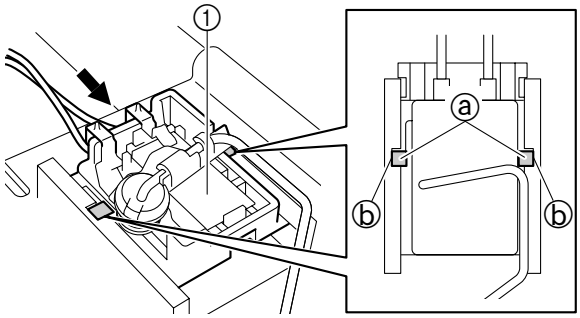

TIP:

Make sure that the tabs ⓐ on the fuel sender ① are securely seated into the slots ⓑ in the fuel pump module.

2. Install the stopper ②, and then connect the fuel sender coupler ⓒ.

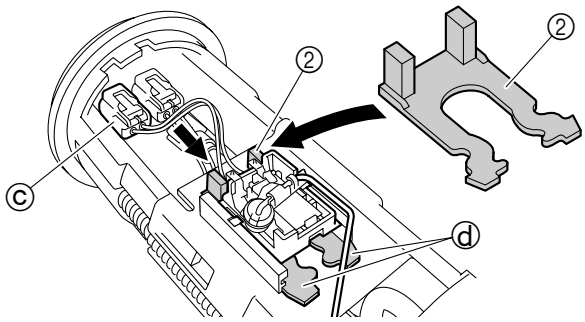

TIP:

Make sure that the hooks ⓓ on the stopper ② are securely hooked onto the fuel pump module.

Fuel rail and injector removal

1. Disconnect the quick connector. See “Fuel pump module removal” (4-3).

2. Remove the fuel hose ①.

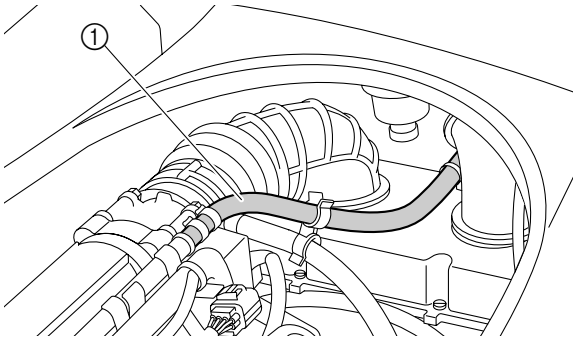

3. Remove the bands ②.

4. Disconnect the cam position sensor coupler ⓐ, fuel injector couplers ⓑ, sensor assy. coupler ⓒ, oil pressure switch coupler ⓓ, and thermoswitch (exhaust) coupler ⓔ.

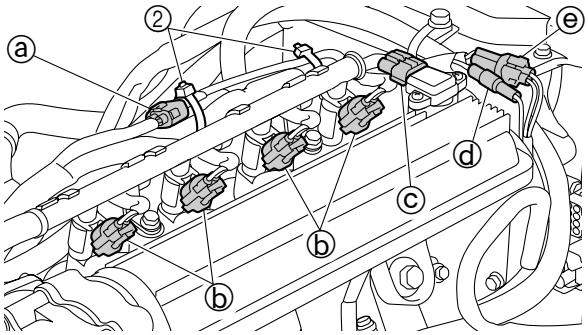

5. Remove the bolts ③, and then remove the fuel rail ④.

6. Remove the gaskets ⑤, fuel injectors ⑥, and O-rings ⑦.

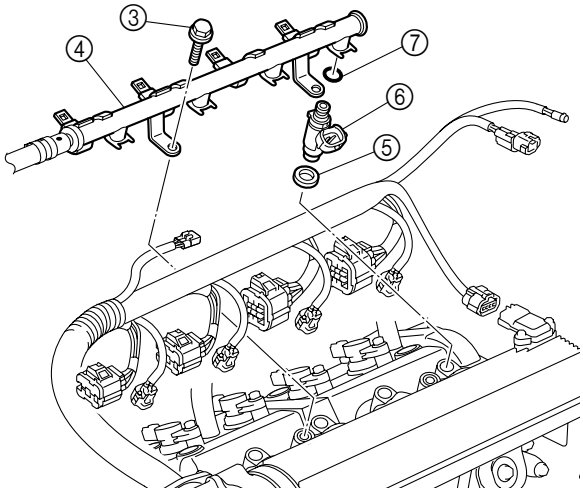

Fuel hose disassembly

1. Remove the clamps ① and quick connector ②. ***NOTICE:*** **When cutting each clamp, position the tool.**

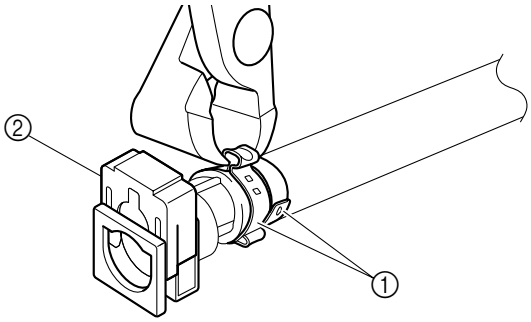

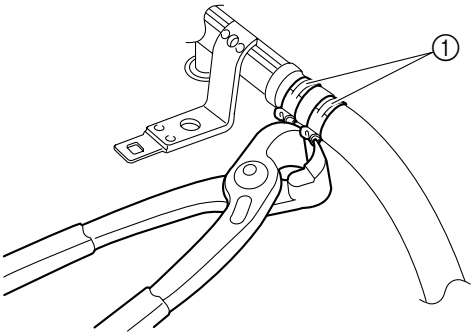

Fuel rail check

1. Check the fuel rail. Replace if cracked or damaged.

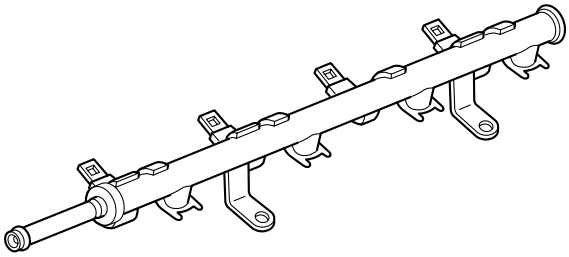

Fuel line check

1. Check the fuel hose ①. Replace if cracked or damaged.

2. Check the quick connector ② and O-rings ③. Replace the quick connector if cracked or damaged.

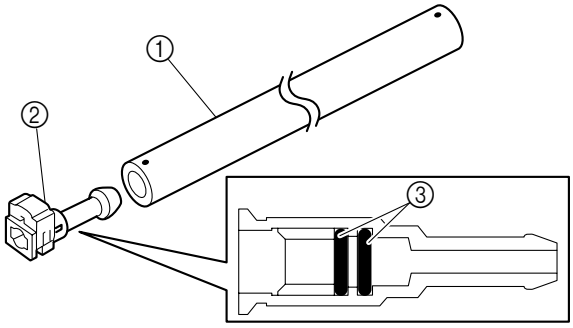

Fuel injector check

1. Check the fuel injector ①. Replace if damaged.

2. Check the fuel injector filter ⓐ. Clean if clogged or contaminated.

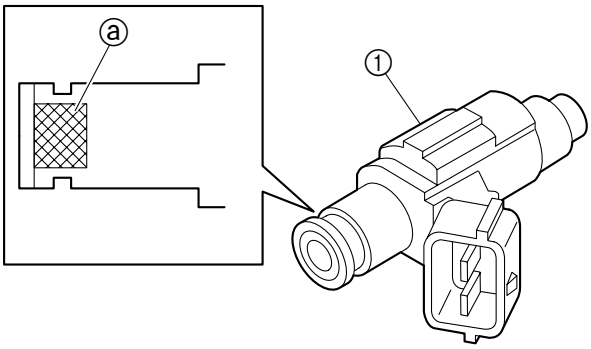

3. Measure the fuel injector resistance. See "Fuel injector resistance" (7-27).

Fuel hose assembly

⚠ WARNING

Do not reuse a clamp, always replace it with a new one, otherwise fuel could leak.

1. Install new clamps ① and the quick connector ② onto the fuel hose ③.

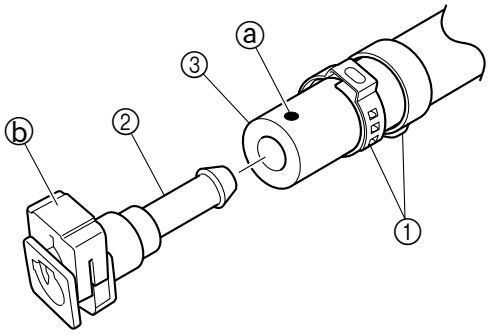

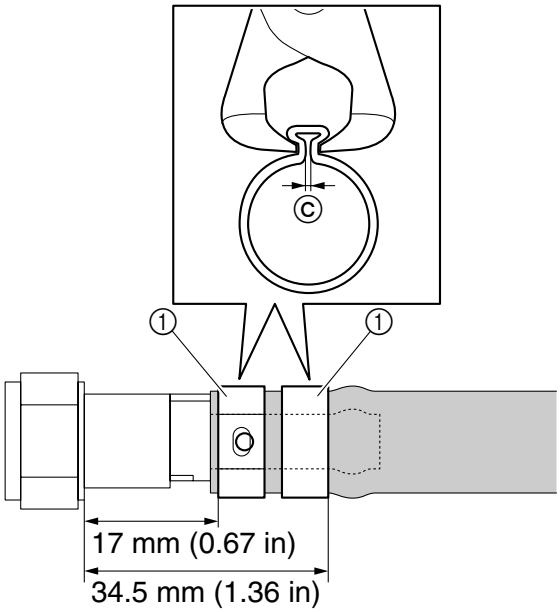

TIP:

- Make sure to align the white paint mark ⓐ on the fuel hose with the retainer ⓑ.
- Position the crimped sections of the clamps 180° away from each other.
- Install the clamps ① at the locations shown.
- Crimp the clamps ① so that the gap ⓒ is 1 mm (0.04 in) or less.

2. Connect the fuel hose ③ to the fuel rail ④, and then fasten the hose with new clamps ①.

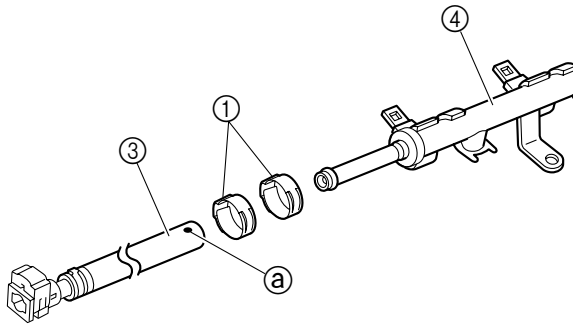

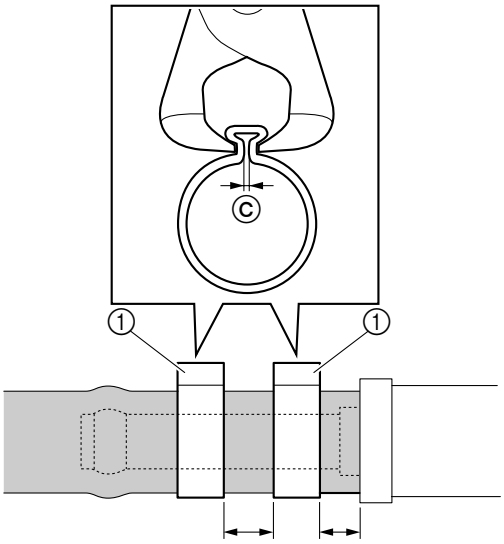

8 mm (0.31 in) 6 mm (0.24 in)

TIP:

- Install the fuel hose ③ with the white paint mark ⓐ facing up.
- Install the clamps ① at the locations shown.
- Crimp the clamps ① so that the gap ⓒ is 1 mm (0.04 in) or less.

Fuel rail and injector installation

⚠ WARNING

Do not reuse a gasket or O-ring, always replace it with a new one.

1. Install new O-rings ① onto the fuel injectors, and then apply a thin coat of engine oil to the O-rings. ***NOTICE:*** **Make sure to apply a thin coat of engine oil to the O-rings before installing the fuel injectors to the fuel rail, otherwise the O-rings could twist and break, causing fuel leakage.**

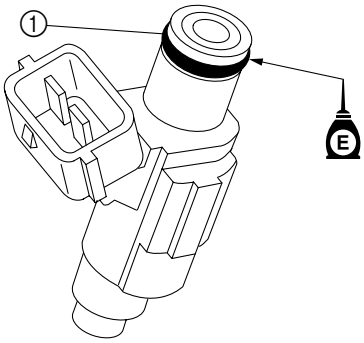

2. While turning the fuel injectors ② slowly to the left and right, install them to the fuel rail ③.

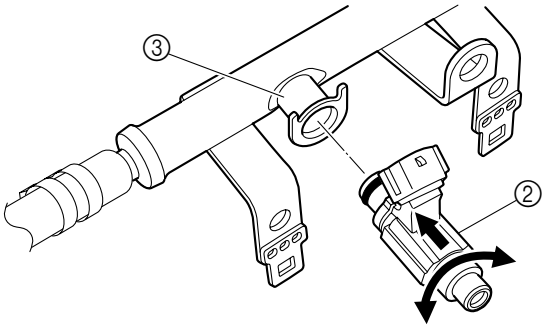

3. Install new gaskets ④.

4. Install the fuel rail ③, and then tighten the bolts ⑤ to the specified torque.

5. Install the wiring harness ⑥.

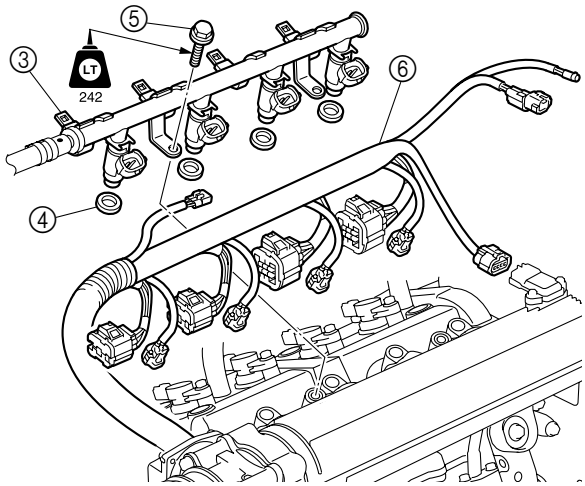

Fuel rail bolt ⑤: 13 N·m (1.3 kgf·m, 9.6 ft·lb)

6. Connect the cam position sensor coupler ⓐ, fuel injector couplers ⓑ, sensor assy. coupler ⓒ, oil pressure switch coupler ⓓ, and thermoswitch (exhaust) coupler ⓔ.

7. Fasten the wiring harness with new bands ⑦.

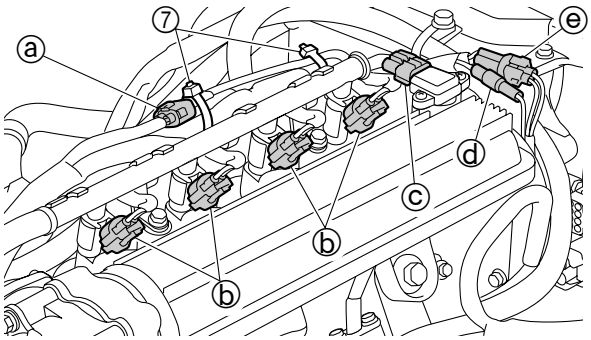

8. Fasten the fuel hose ⑧ with the holder ⑨ and plastic tie ⑩.

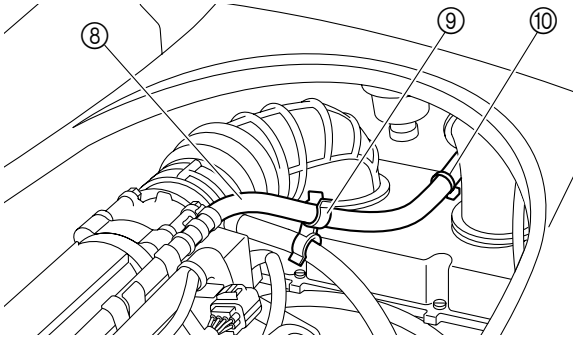

Fuel pump module installation

⚠ WARNING

Do not reuse a packing, always replace it with a new one.

1. Install a new packing and the fuel pump module assy. ①. ***NOTICE:*** **When installing the fuel pump module assy. ①, make sure that the rubber caps ⓐ do not come off.**

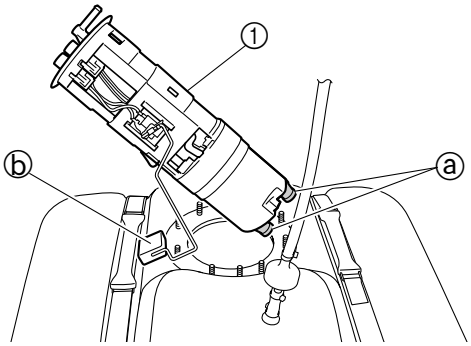

TIP:

Make sure to insert the float ⓑ into the fuel tank.

2. Install the retainer ②, and then tighten the nuts to the specified torques in 2 stages and in the order [1], [2], and so on.

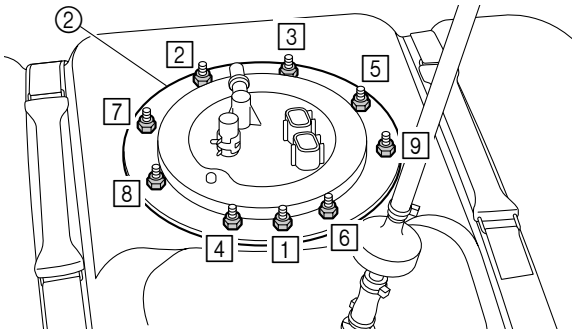

Fuel pump module nut: 1st: 3 N·m (0.3 kgf·m, 2.2 ft·lb) 2nd: 6 N·m (0.6 kgf·m, 4.4 ft·lb)

3. Apply a thin coat of engine oil to the contact surfaces of the fuel pipe ⓒ.

4. Connect the quick connector ③ onto the fuel pipe ⓒ.

5. Push down on the retainer ⓓ until it clicks.

6. Connect the fuel sender coupler ⓔ and fuel pump module coupler ⓕ.

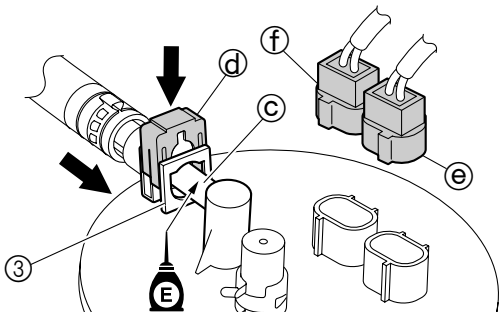

TIP:

- If the quick connector ③ is not installed completely onto the fuel pipe ⓒ, the retainer ⓓ cannot be pushed down.
- Check that the quick connector ③ is correctly installed by making sure there is a small amount of free play when the quick connector is pulled and pushed. If there is no free play in the quick connector ③, disconnect the fuel hose and check the O-rings for damage and proper installation.

7. Install the service lid. See “Front hood” (8-8).

Fuel pressure measurement

1. Disconnect the quick connector from the fuel pump module.

2. Install the special service tools ① and ②.

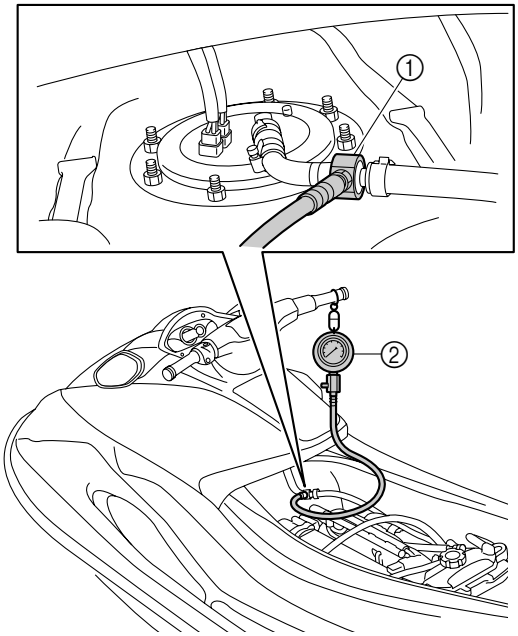

3. Start the engine and warm it up for 6 minutes or more at engine idle speed.

TIP:
Warm up the engine an additional 5 minutes if the ambient temperature is 20 °C (68 °F) or less.

4. Measure the fuel pressure. Replace the fuel pump module assy. if out of specification.

Fuel pressure gauge adapter ①: YW-06842/90890-06842 Fuel pressure gauge ②: YB-06766/90890-06786

Fuel pressure: 319–340 kPa (3.19–3.40 kgf/cm^2, 45.4–48.4 psi)

Air filter case and throttle body assy.

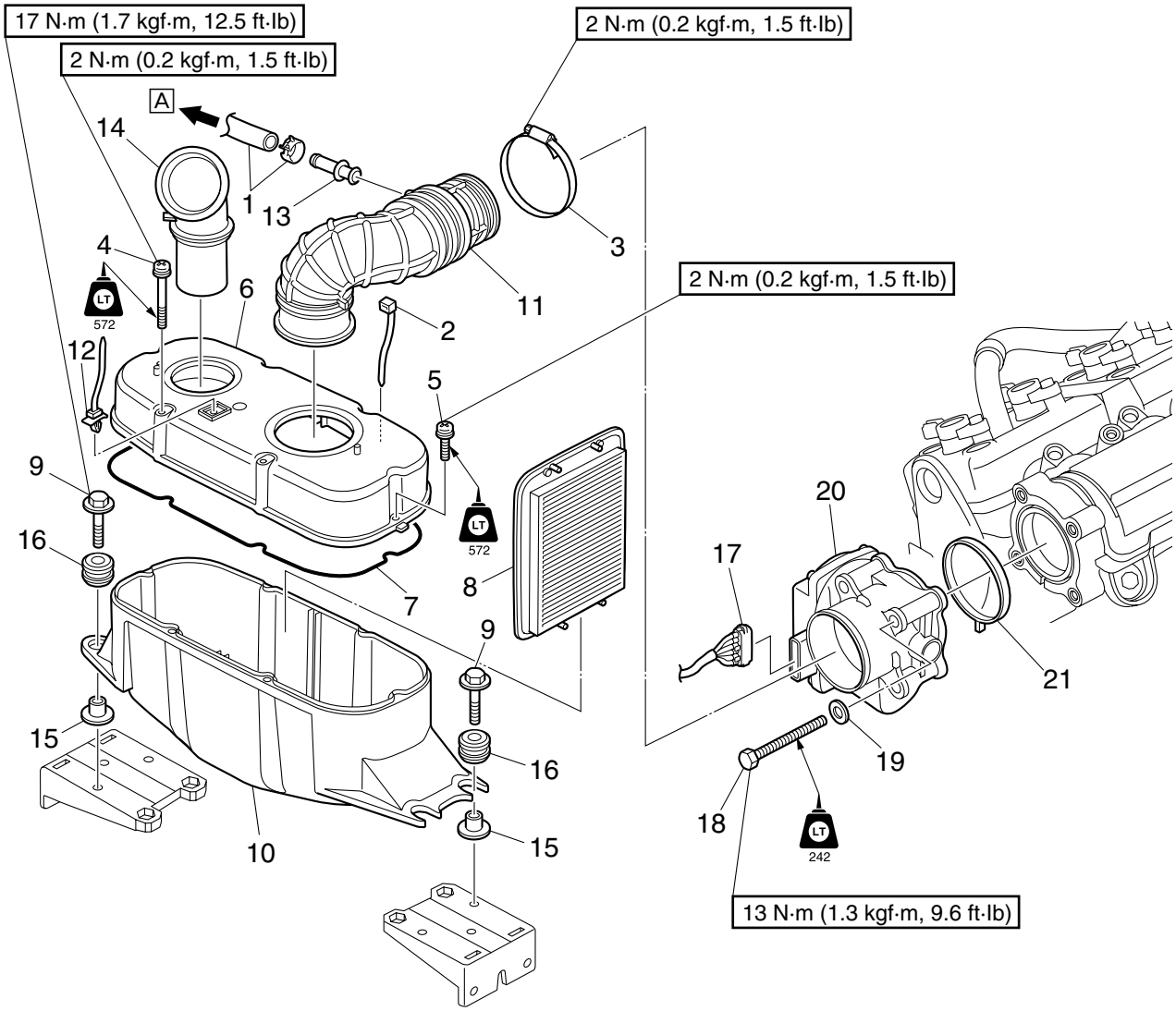

No.	Part name	Q'ty	Remarks
1	Clamp/breather hose	1/1	A To oil separator
2	Plastic tie	2	
3	Clamp	1	
4	Screw	2	ø5 × 75 mm
5	Screw	4	ø5 × 25 mm
6	Air filter case cover	1	
7	Gasket	1	**Not reusable**
8	Air filter element	1	
9	Bolt	4	M8 × 35 mm
10	Air filter case	1	
11	Air intake pipe	1	
12	Plastic tie	1	
13	Connection	1	
14	Air intake duct	1	
15	Collar	4	
16	Grommet	4	

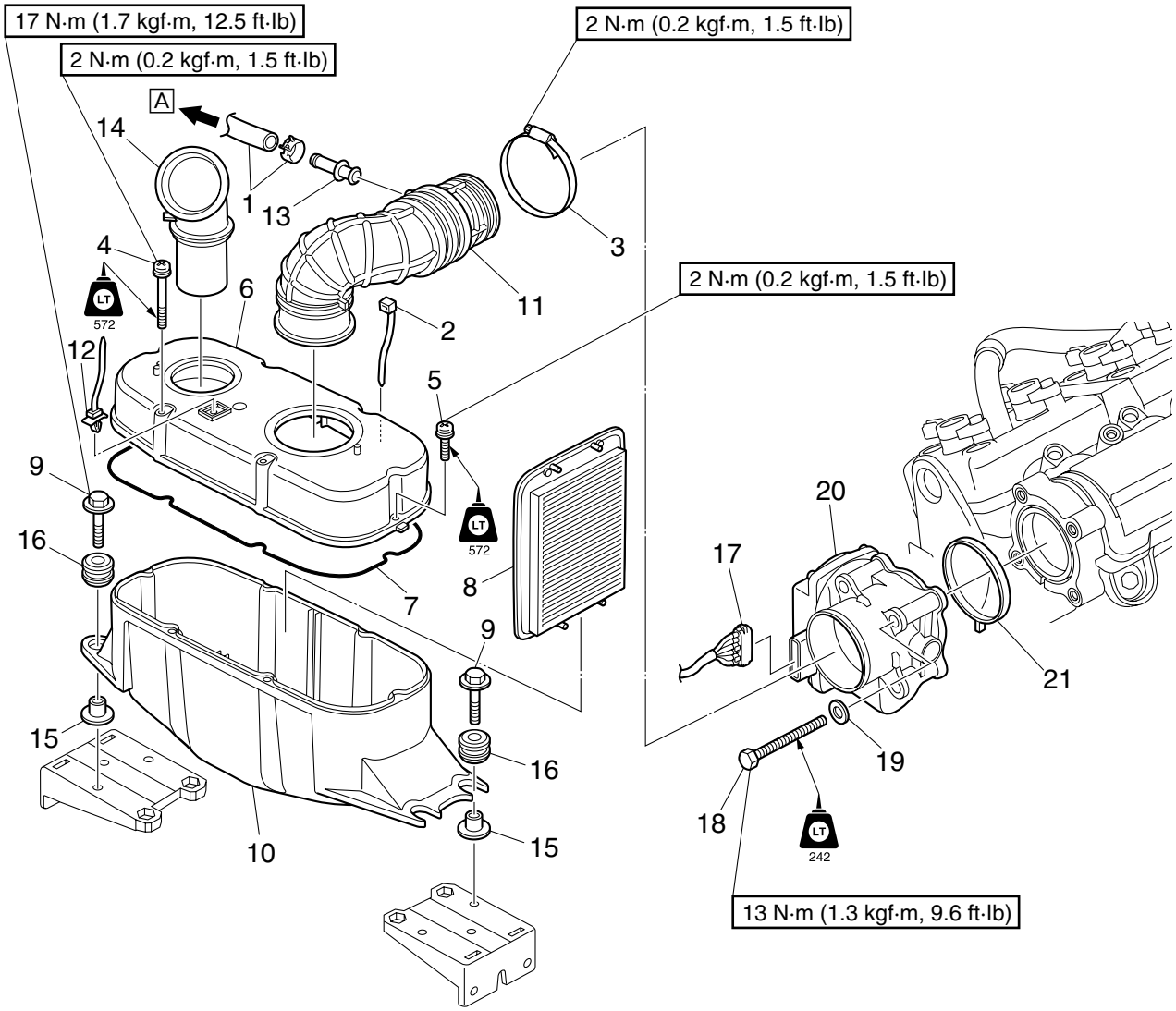

No.	Part name	Q'ty	Remarks
17	Throttle body assy. coupler	1	
18	Bolt	4	M8 × 65 mm
19	Washer	4	
20	Throttle body assy.	1	
21	Gasket	1	**Not reusable**

Air filter case removal

1. Remove the water separator. See “Ventilation hose and water separator” (8-21).

2. Remove the fuel hose ① and holder ②.

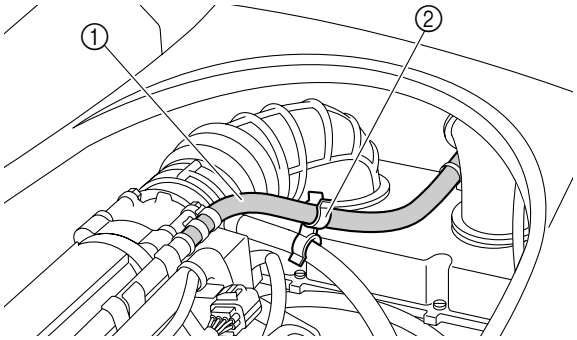

3. Disconnect the breather hose ③ from the air intake pipe ④.

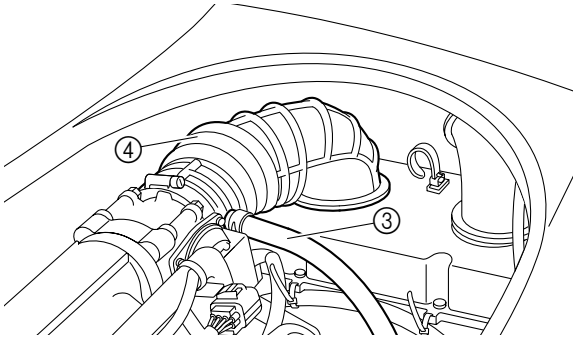

4. Remove the plastic ties ⑤, and then loosen the clamp ⑥.

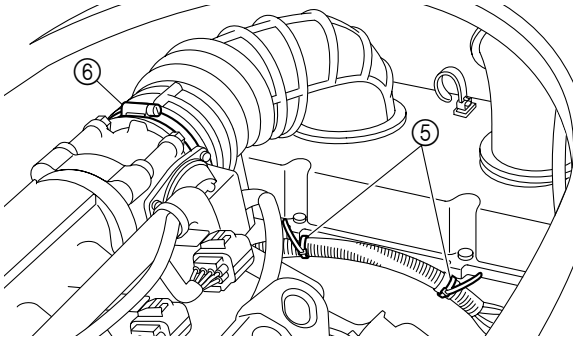

5. Remove the screws ⑦ and ⑧.

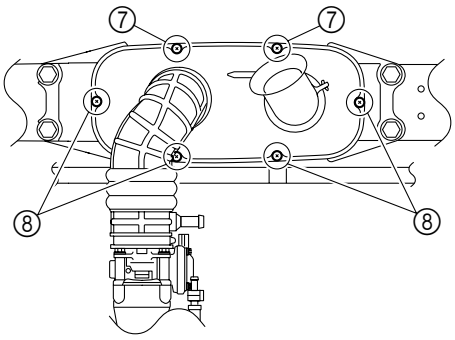

6. Disconnect the air intake pipe ④, and then turn the air intake pipe ④.

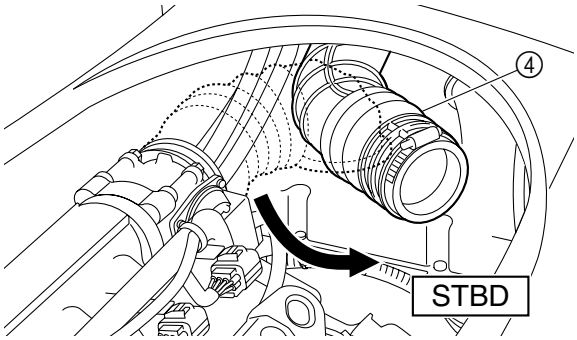

7. Remove the air filter case cover ⑨.

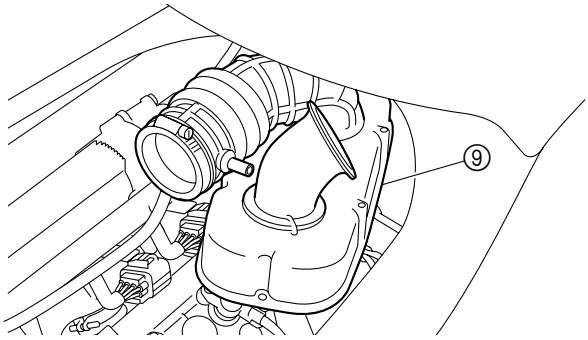

8. Remove the air filter element ⑩, bolts ⑪, and air filter case ⑫.

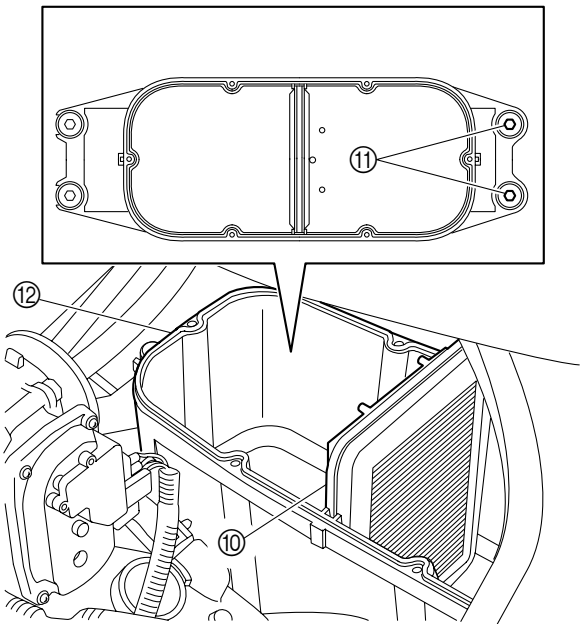

9. Remove the air intake pipe ④, clamp ⑥, plastic tie ⑬, connection ⑭, and air intake duct ⑮.

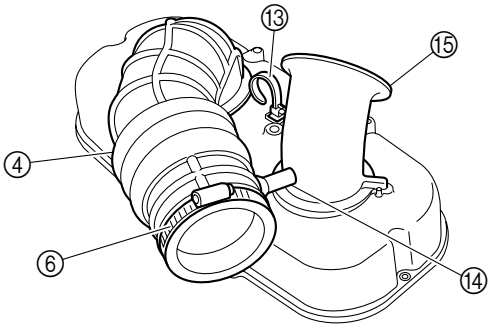

10. Remove the collars ⑯ and grommets ⑰.

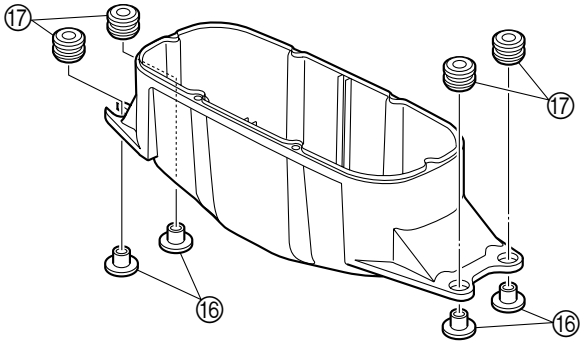

11. Install the water separator. See “Ventilation hose and water separator” (8-21).

Air filter element check

1. Check the air filter element. Replace if damaged or dirty.

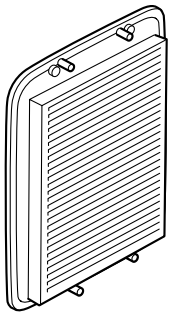

Air filter case assy. check

1. Check the air intake pipe ①, air intake duct ②, air filter case cover ③, and air filter case ④. Replace if cracked or damaged.

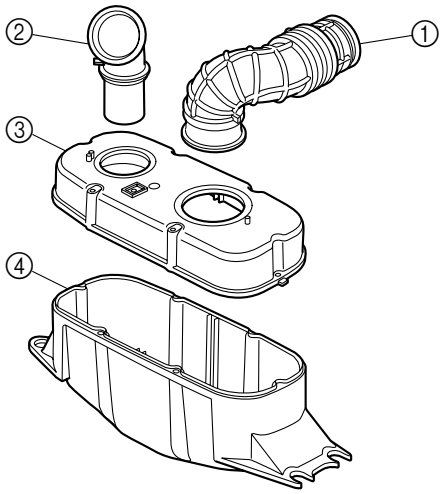

Air filter case installation

NOTICE

Do not reuse a gasket, always replace it with a new one.

1. Remove the water separator. See “Ventilation hose and water separator” (8-21).

2. Install the air intake duct ①, the air intake pipe ②, the plastic tie ③, the clamp ④, the connection ⑤, and a new gasket ⑥.

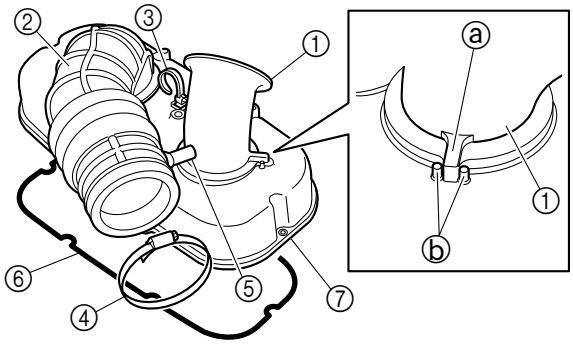

TIP:

- Install the air intake pipe ② to the air filter case cover ⑦ at the angle shown.
- Fit the projection ⓐ on the air intake duct ① between the projections ⓑ on the air filter case cover ⑦.

3. Install the grommets ⑧ and collars ⑨ to the air filter case ⑩.

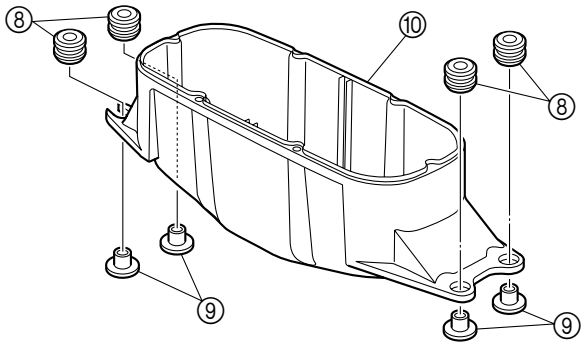

4. Install the air filter case ⑩, and then tighten the bolts ⑪ to the specified torque.

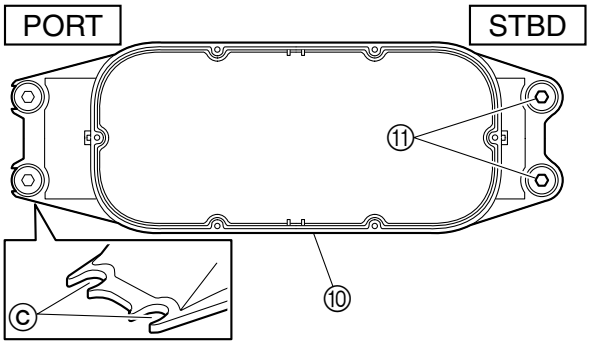

Air filter case bolt ⑪: 17 N·m (1.7 kgf·m, 12.5 ft·lb)

TIP:
Face the slots ⓒ in the air filter case ⑩ to port.

5. Install the air filter element ⑫.

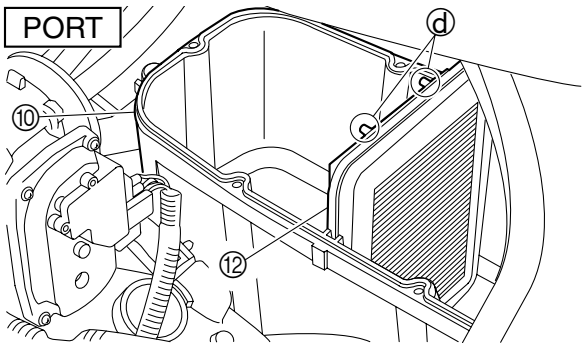

TIP:
Face the projections ⓓ on the air filter element ⑫ to port.

6. Install the air filter case cover ⑦.

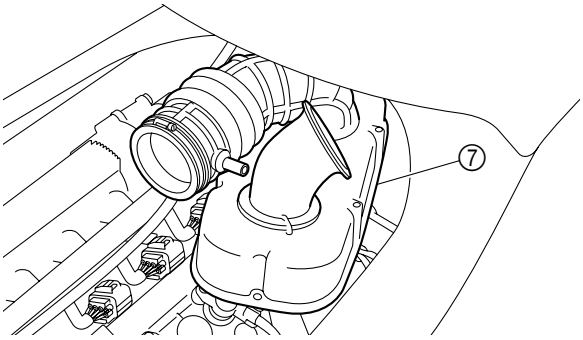

7. Turn the air intake pipe ②, and then connect the air intake pipe to the throttle body assy. ⑬.

8. Tighten the clamp ④ to the specified torque.

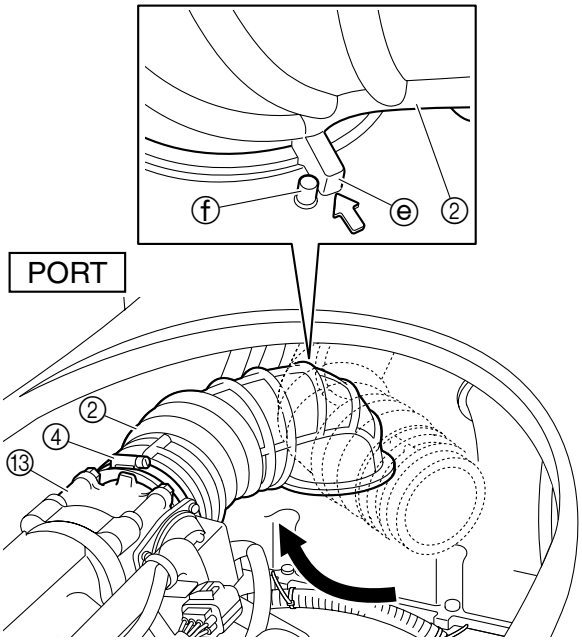

Air intake pipe clamp ④: 2 N·m (0.2 kgf·m, 1.5 ft·lb)

TIP:
Make sure that the projection ⓔ on the air intake pipe ② contacts the projection ⓕ on the air filter case cover.

9. Tighten the screws ⑭ and ⑮ to the specified torque.

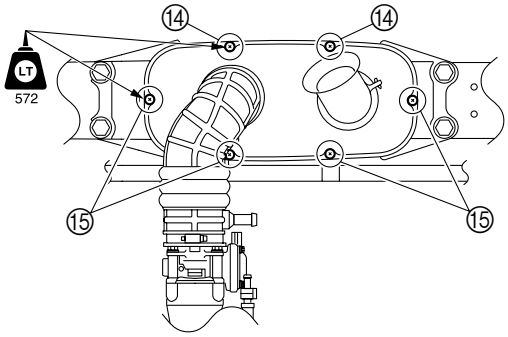

Air filter case cover screw (ø5 × 75 mm) ⑭:
Air filter case cover screw (ø5 × 25 mm) ⑮:
2 N·m (0.2 kgf·m, 1.5 ft·lb)

10. Fasten the corrugated tube ⑯ with the plastic ties ⑰.

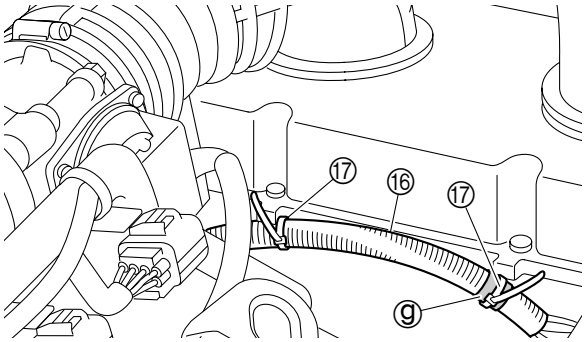

TIP:
Align the plastic tie ⑰ with the gray tape ⓖ on the corrugated tube ⑯.

11. Connect the breather hose ⑱, and then fasten the hose with the clamp ⑲.

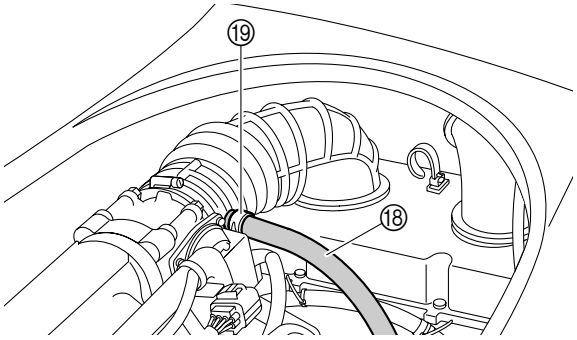

12. Fasten the fuel hose ⑳ with the holder ㉑ and plastic tie ③.

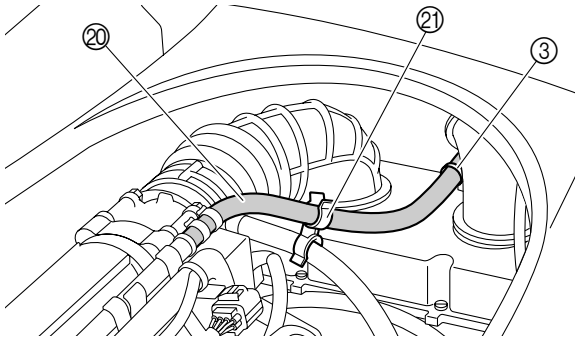

13. Install the water separator. See “Ventilation hose and water separator” (8-21).

Throttle body assy. removal

1. Remove the air intake pipe. See “Air filter case removal” (4-12).

2. Disconnect the throttle body assy. coupler ⓐ.

3. Remove the throttle body assy. ① and gasket ②.

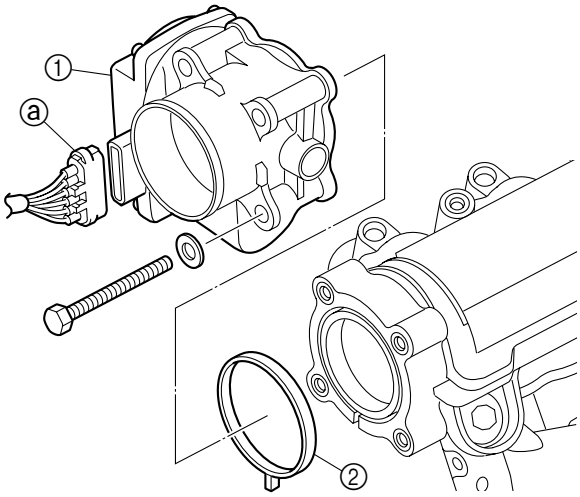

Throttle body assy. check

NOTICE

- **Do not disassemble the throttle body assy.**
- **Do not loosen the throttle stop screw nut ⓐ and do not turn the throttle stop screw ⓑ.**
- **Do not loosen or remove the throttle valve shaft screws ⓒ.**

1. Check the throttle body assy. Replace if cracked or damaged.

2. Check the throttle valve opening. See “Throttle position sensor” (7-18).

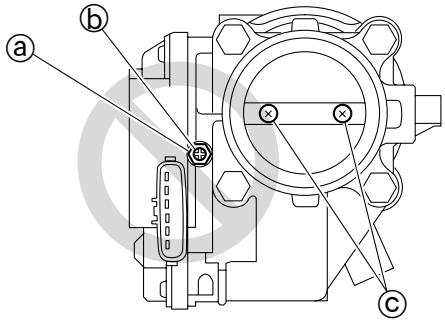

Throttle body assy. installation

NOTICE

Do not reuse a gasket, always replace it with a new one.

1. Install a new gasket ① and the throttle body assy. ②, and then tighten the bolts ③ to the specified torque.

2. Connect the throttle body assy. coupler ⓐ.

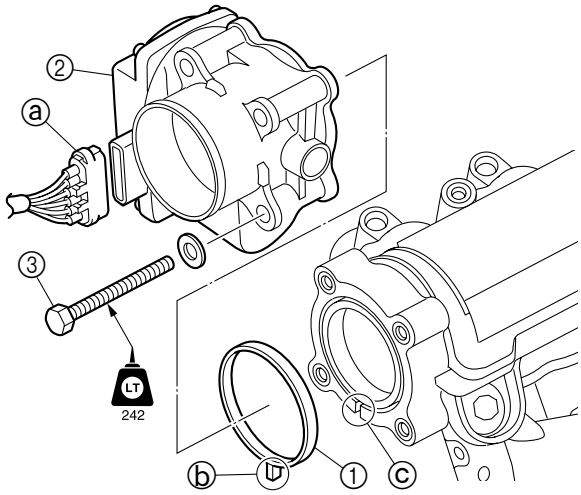

Throttle body assy. bolt ③: 13 N·m (1.3 kgf·m, 9.6 ft·lb)

TIP:

Fit the protrusion ⓑ on the gasket ① into the slot ⓒ in the intake manifold.

3. Install the air intake pipe. See “Air filter case installation” (4-13).

Fuel tank

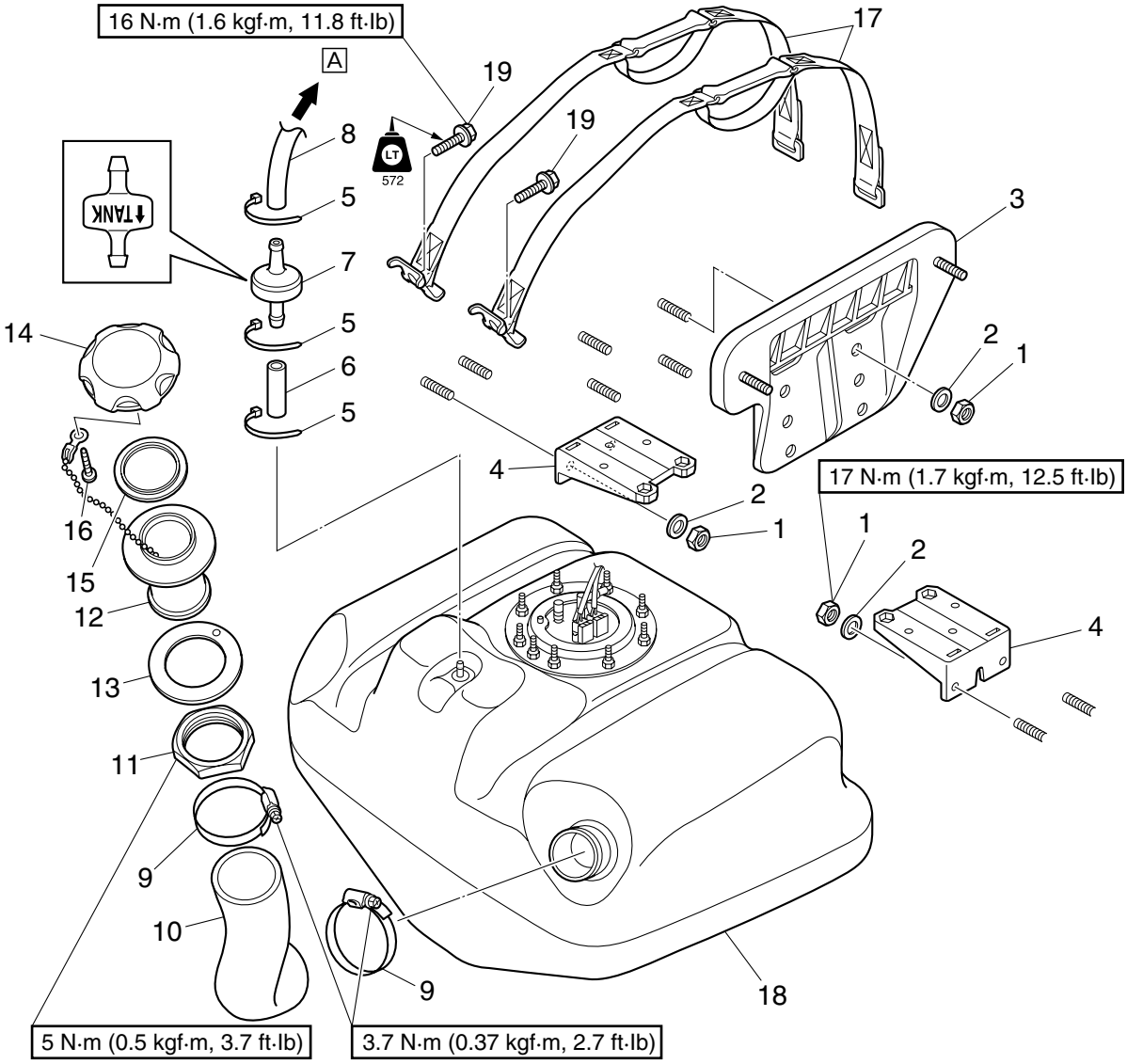

No.	Part name	Q'ty	Remarks
1	Nut	8	
2	Washer	8	
3	Fuse box bracket	1	
4	Air filter case bracket	2	
5	Band	3	**Not reusable**
6	Fuel tank breather hose	1	
7	Check valve	1	
8	Fuel tank breather hose	1	A To water separator
9	Clamp	2	
10	Fuel filler hose	1	
11	Nut	1	
12	Fuel filler neck	1	
13	Packing	1	**Not reusable**
14	Fuel filler cap	1	
15	Packing	1	**Not reusable**
16	Screw	1	ø4 × 12 mm

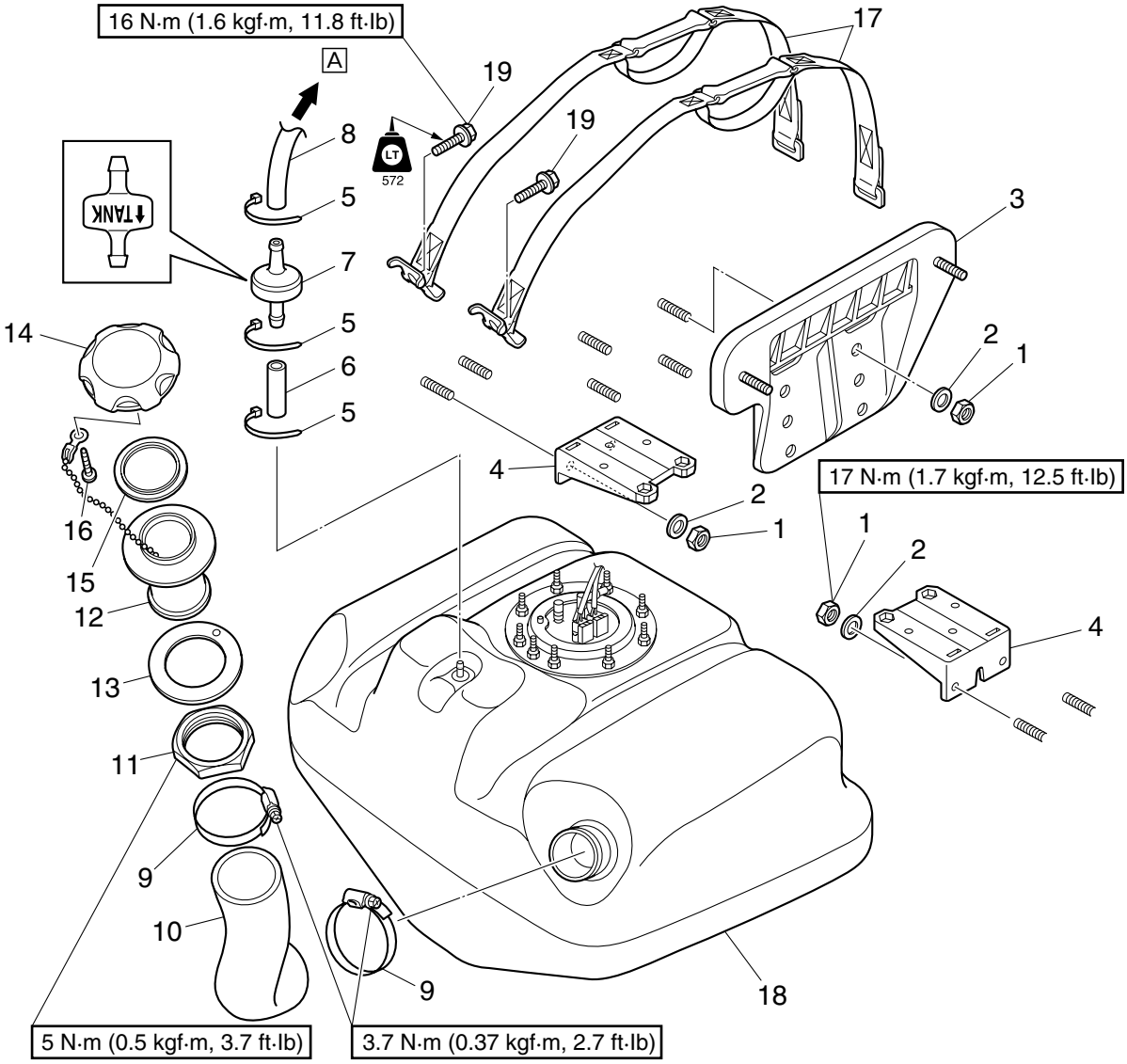

No.	Part name	Q'ty	Remarks
17	Strap	2	
18	Fuel tank	1	
19	Bolt	2	M8 × 18 mm

Fuel tank removal

1. Extract the fuel using a siphon pump ①.

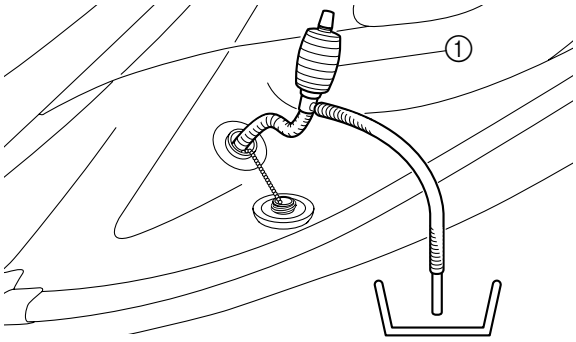

TIP:
Use a commercially available siphon pump ① to extract the fuel.

2. Remove the air filter case. See “Air filter case removal” (4-12).

3. Remove the engine unit. See “Engine unit removal” (5-5).

4. Remove the nuts ② and washers ③, and then remove the fuse box bracket ④ and air filter case brackets ⑤.

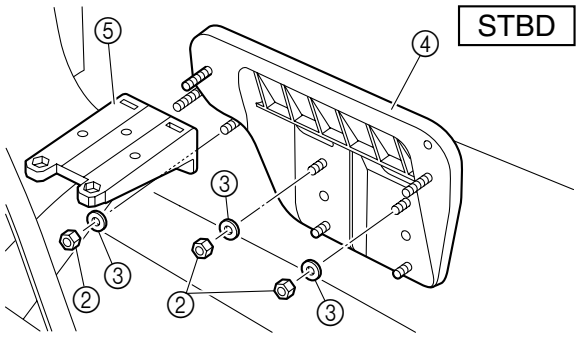

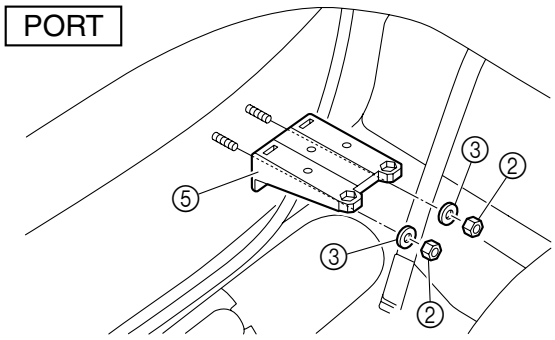

5. Remove the bands ⑥, fuel tank breather hoses ⑦, and check valve ⑧.

6. Disconnect the fuel sender coupler ⓐ and fuel pump module coupler ⓑ.

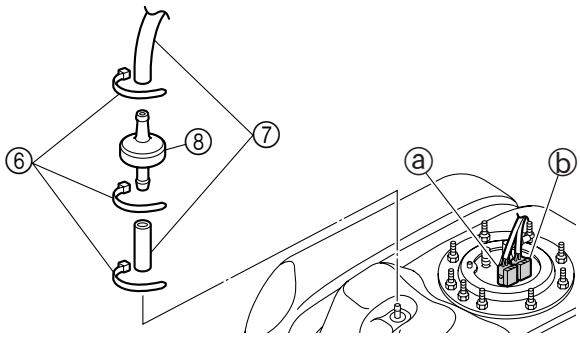

7. Remove the clamps ⑨ and fuel filler hose ⑩.

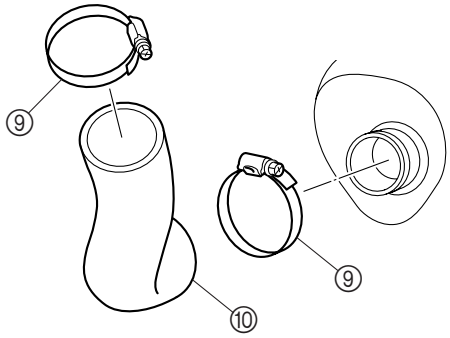

8. Remove the nut ⑪, and then remove the fuel filler neck ⑫, packing ⑬, and fuel filler cap ⑭.

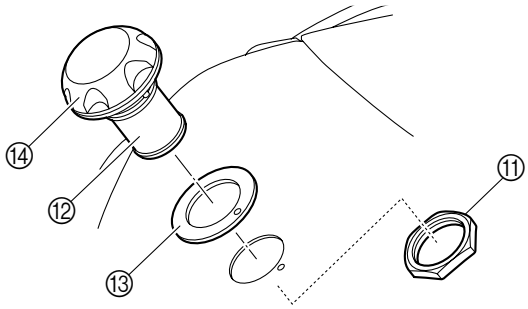

9. Remove the straps ⑮, and then remove the fuel tank ⑯.

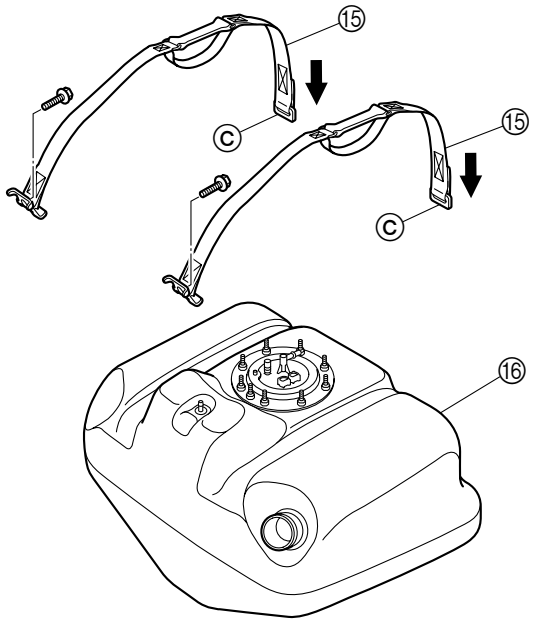

TIP:

Pull the straps ⑮ in the directions of the arrows to unhook the metal loops ⓒ on the end of the straps.

10. Remove the fuel pump module. See "Fuel pump module removal" (4-3).

Check valve check

1. Blow into the end ⓐ of the check valve, and make sure that airflow from the end ⓑ is unrestricted. Replace if the air flow is restricted.

2. Blow into the end ⓑ of the check valve, and make sure that airflow from the end ⓐ is restricted. Replace if the air flow is unrestricted.

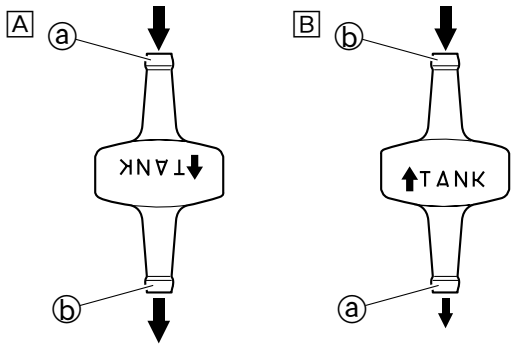

A Upright
B Inverted

Fuel filler neck and hose check

1. Check the fuel filler cap ①, fuel filler neck ②, nut ③, and fuel filler hose ④. Replace if cracked or damaged.

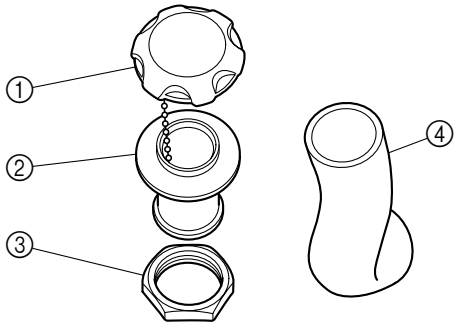

Fuel filler cap check

1. Install the fuel filler cap ① onto the fuel filler neck ②, and then hold the fuel filler neck ②.

2. Turn the fuel filler cap ① clockwise A and check that it clicks when tightened completely. Replace if it does not click.

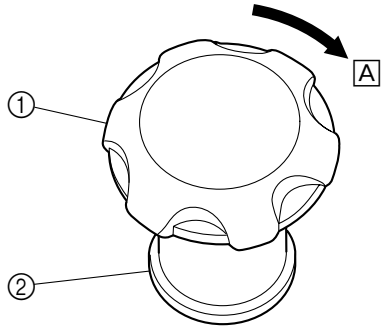

Fuel tank check

1. Check the fuel tank. Replace if cracked or damaged.

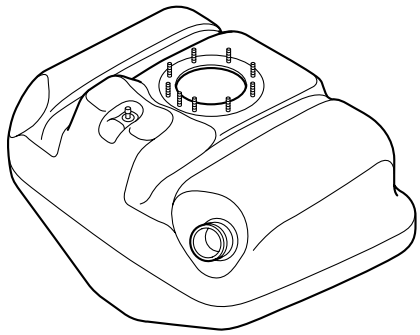

Fuel tank installation

NOTICE

Do not reuse a packing or band, always replace it with a new one.

1. Install the fuel pump module. See “Fuel pump module installation” (4-8).

2. Install the straps ①, and then tighten the bolts ② to the specified torque.

3. Install the fuel tank ③, and then fasten the fuel tank with the straps ①.

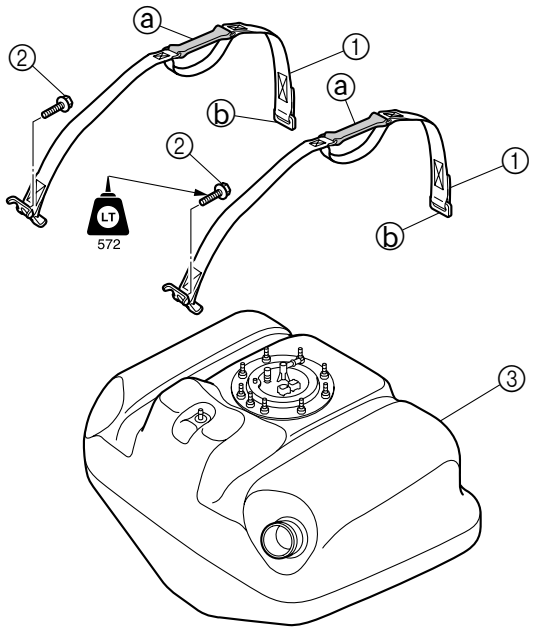

Strap bolt ②: 16 N·m (1.6 kgf·m, 11.8 ft·lb)

TIP:

- Install the straps ① so that the rubber band portions ⓐ of the straps are positioned on top.
- Make sure that the metal loops ⓑ on the end of the straps ① are securely hooked onto the holders on the hull.

4. Install a new packing ④, fuel filler neck ⑤, and the fuel filler cap ⑥.

5. Tighten the nut ⑦ to the specified torque.

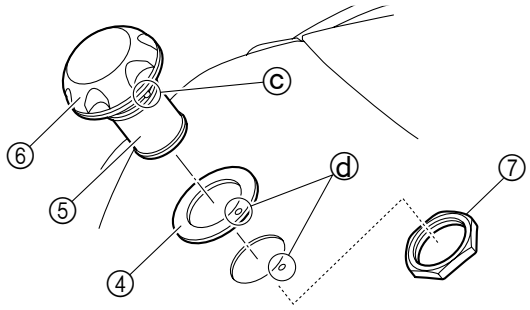

Fuel filler neck nut ⑦: 5 N·m (0.5 kgf·m, 3.7 ft·lb)

TIP:

Align the projection ⓒ on the fuel filler neck ⑤ with the holes ⓓ in the packing ④ and deck.

6. Install the fuel filler hose ⑧, and then tighten the clamps ⑨ to the specified torque.

7. Check that the distance ⓔ is within specification.

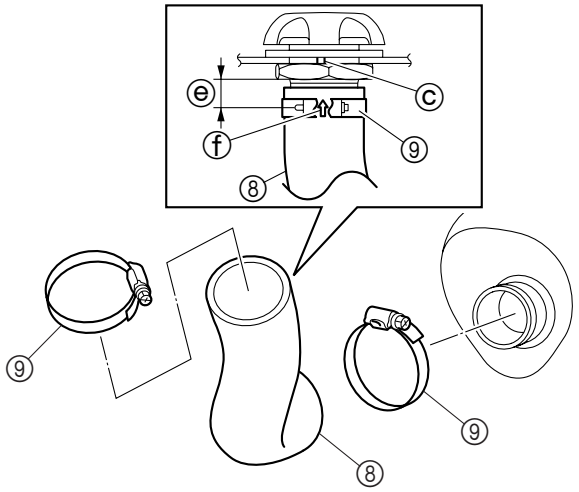

Distance ⓔ: 30–40 mm (1.2–1.6 in)

Fuel filler hose clamp ⑨: 3.7 N·m (0.37 kgf·m, 2.7 ft·lb)

TIP:

Align the arrow mark ⓕ on the fuel filler hose ⑧ with the projection ⓒ on the fuel filler neck.

8. Connect the fuel sender coupler ⓖ and fuel pump module coupler ⓗ.

9. Install the fuel tank breather hoses ⑩ and check valve ⑪.

10. Fasten the fuel tank breather hoses ⑩ with new bands ⑫.

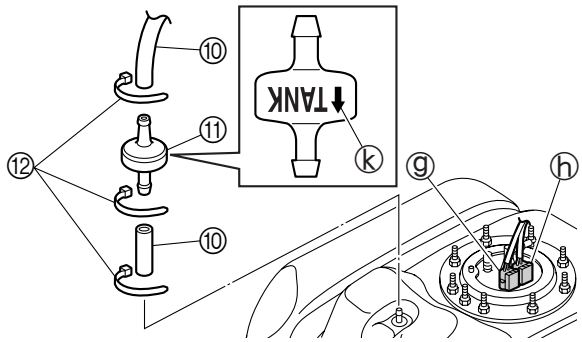

TIP:
Point the arrow mark ⓚ toward the fuel tank.

11. Install the air filter case brackets ⑬, fuse box bracket ⑭, and washers ⑮, and then tighten the nuts ⑯ to the specified torque.

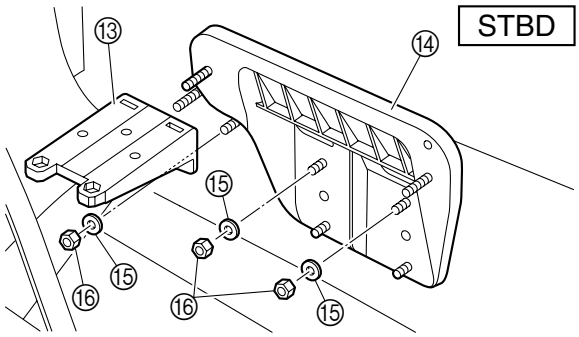

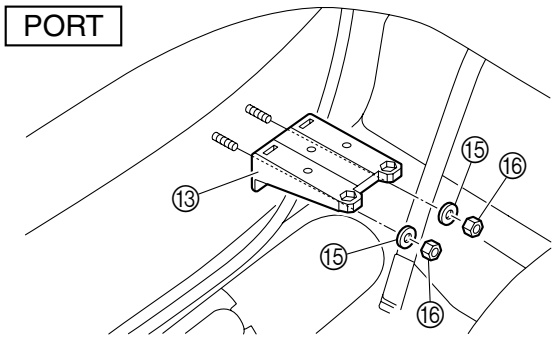

Air filter case bracket nut ⑯: Fuse box bracket nut ⑯: 17 N·m (1.7 kgf·m, 12.5 ft·lb)

12. Install the engine unit. See “Engine unit installation” (5-8).

13. Install the air filter case. See “Air filter case installation” (4-13).

4

Power unit

Engine unit

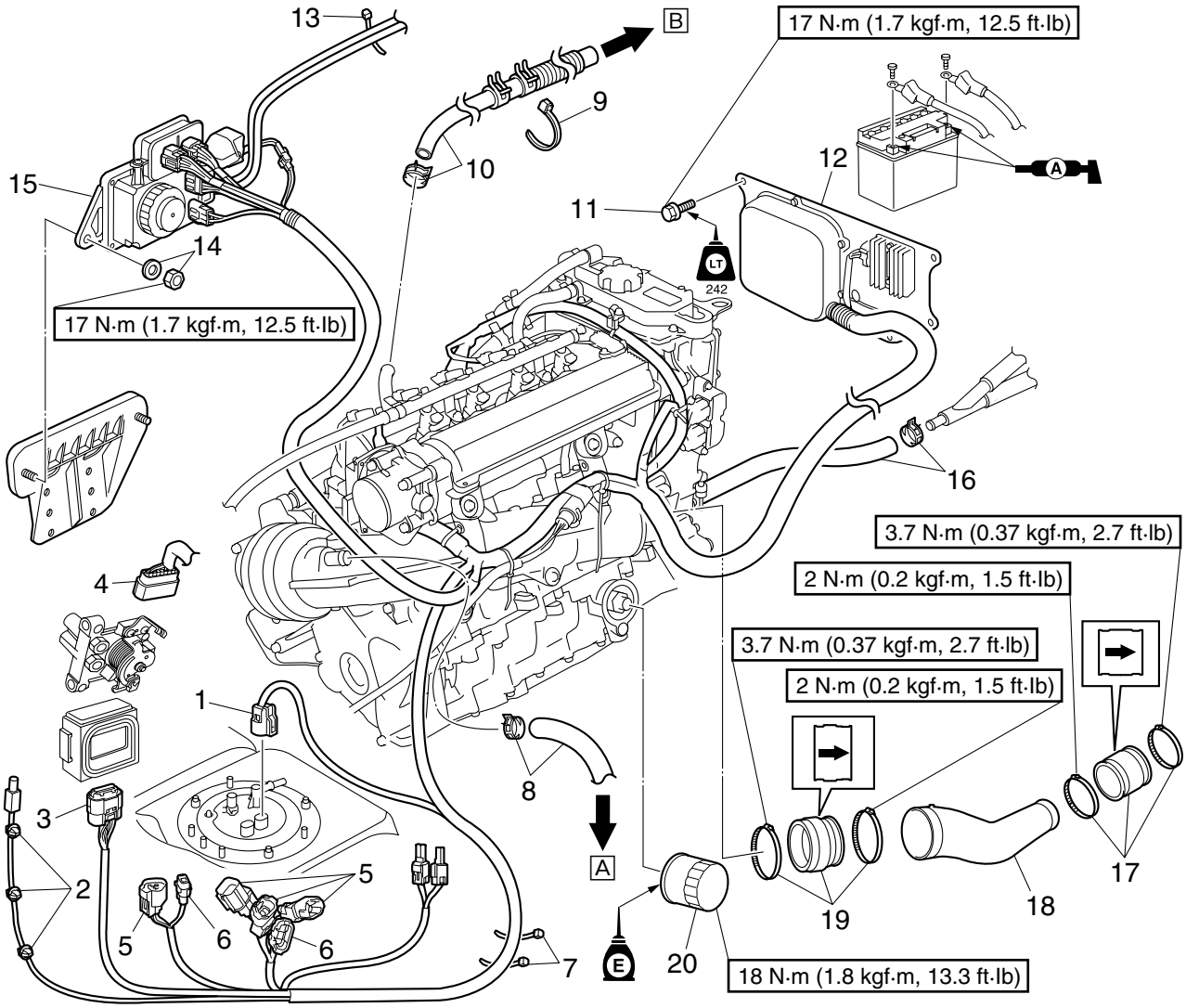

No.	Part name	Q'ty	Remarks
	Battery cables		See "Exhaust system" (8-26).
	Engine oil		See "Engine oil change" (3-10).
	Service lid		See "Front hood" (8-8).
	Fuel hose/air filter case		See "Air filter case removal" (4-12).
1	Fuel pump module coupler	1	
2	Antenna holder	3	VX Cruiser and VX Deluxe
3	Remote control receiver coupler	1	VX Cruiser and VX Deluxe
4	APS coupler	1	
5	Coupler	4	
6	Coupler	2	VX Cruiser and VX Deluxe
7	Plastic tie	2	
8	Cooling water hose/clamp	1/1	A To cooling water pilot outlet
9	Band	1	**Not reusable**
10	Cooling water hose/clamp	1/1	B To transom plate
11	Bolt	4	M8 × 18 mm
12	Electrical plate assy.	1	

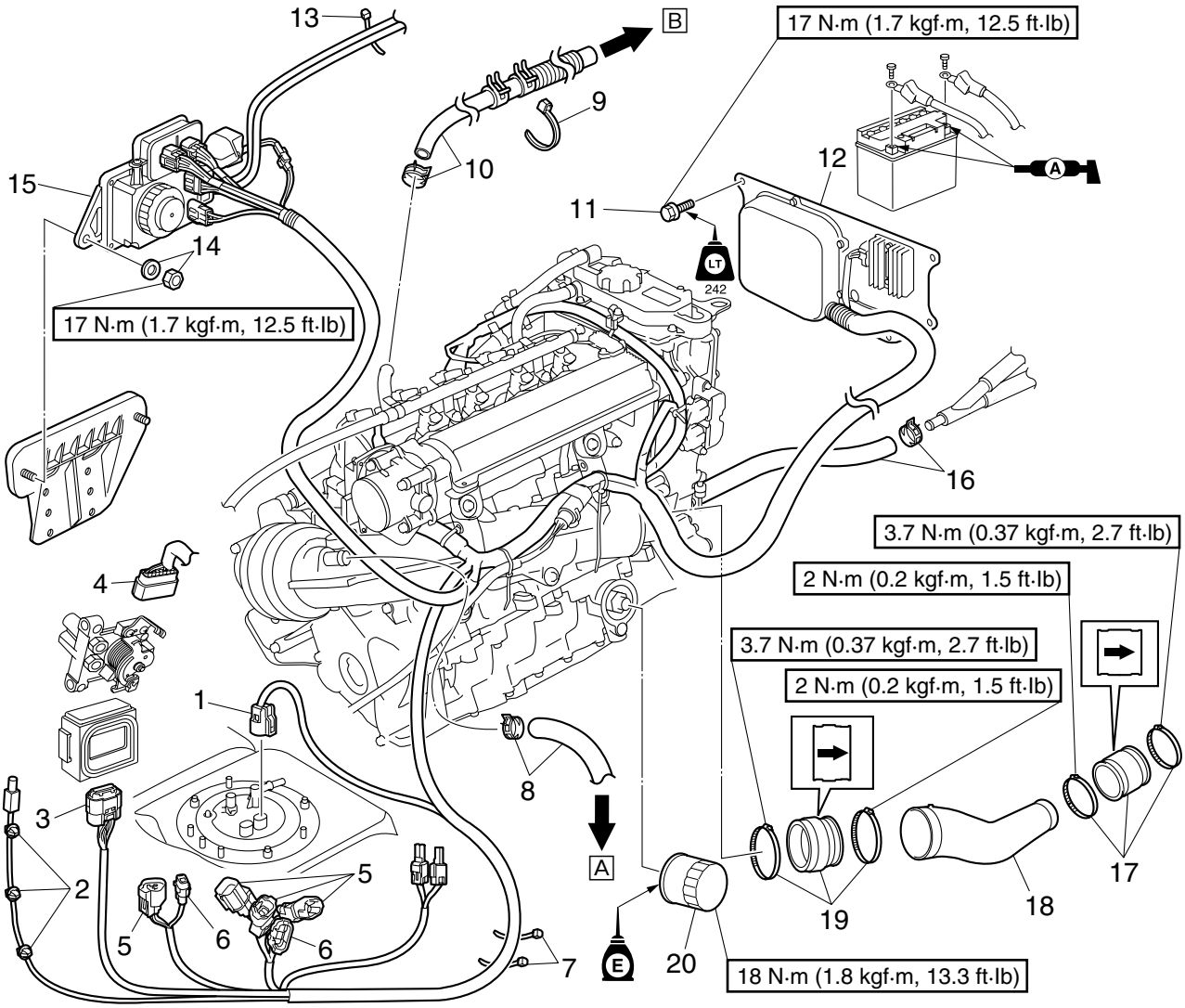

No.	Part name	Q'ty	Remarks
13	Plastic tie	1	
14	Nut/washer	2/2	
15	Fuse box assy.	1	
16	Cooling water hose/clamp	1/1	
17	Joint/clamp	1/2	
18	Exhaust joint	1	
19	Joint/clamp	1/2	
20	Oil filter	1	

Engine unit and coupling cover

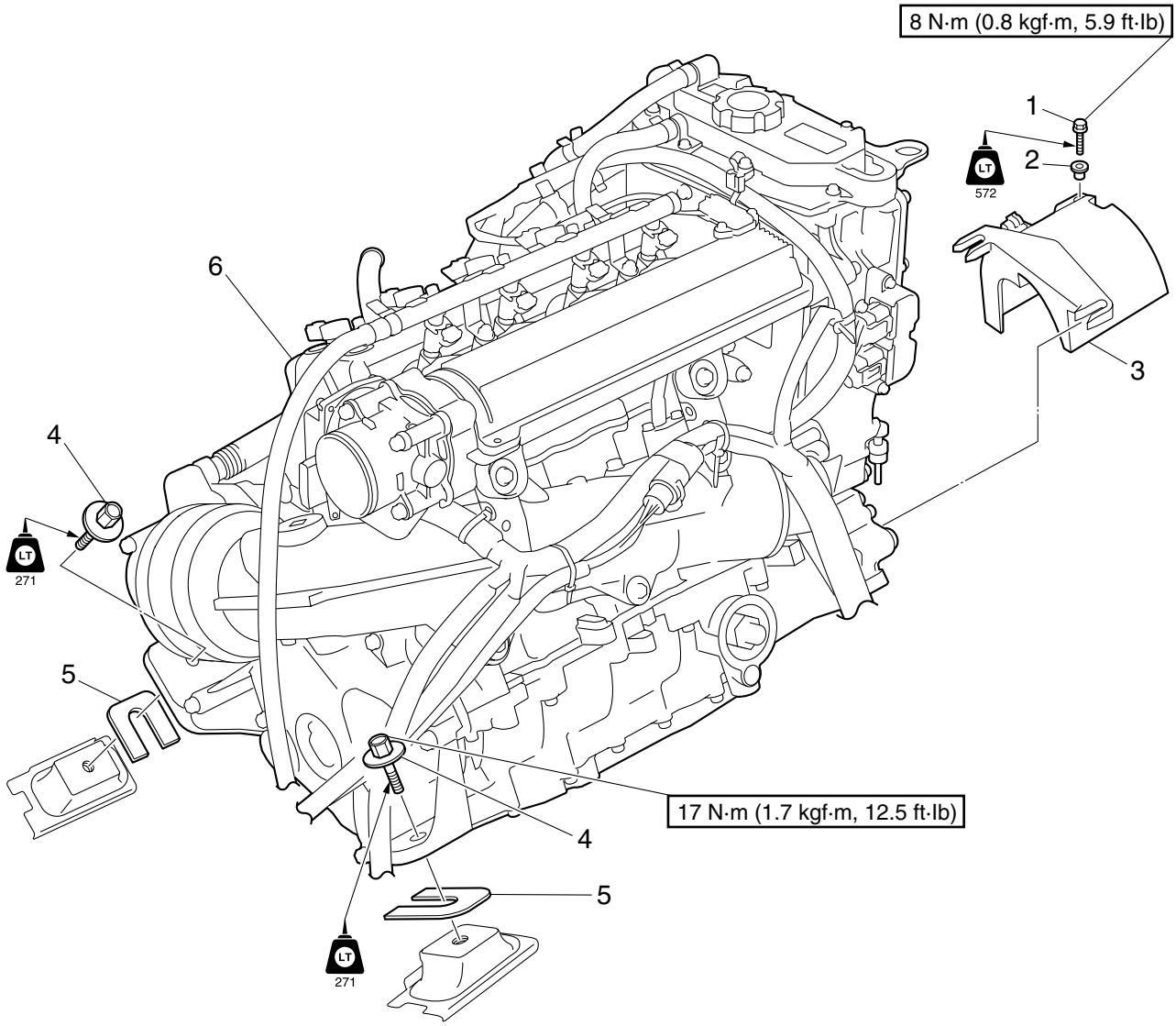

No.	Part name	Q'ty	Remarks
1	Bolt	1	M6 × 25 mm
2	Collar	1	
3	Coupling cover	1	
4	Engine mounting bolt	4	M8 × 35 mm
5	Shim	*	
6	Engine unit	1	

*: As required.

Engine mount and stopper

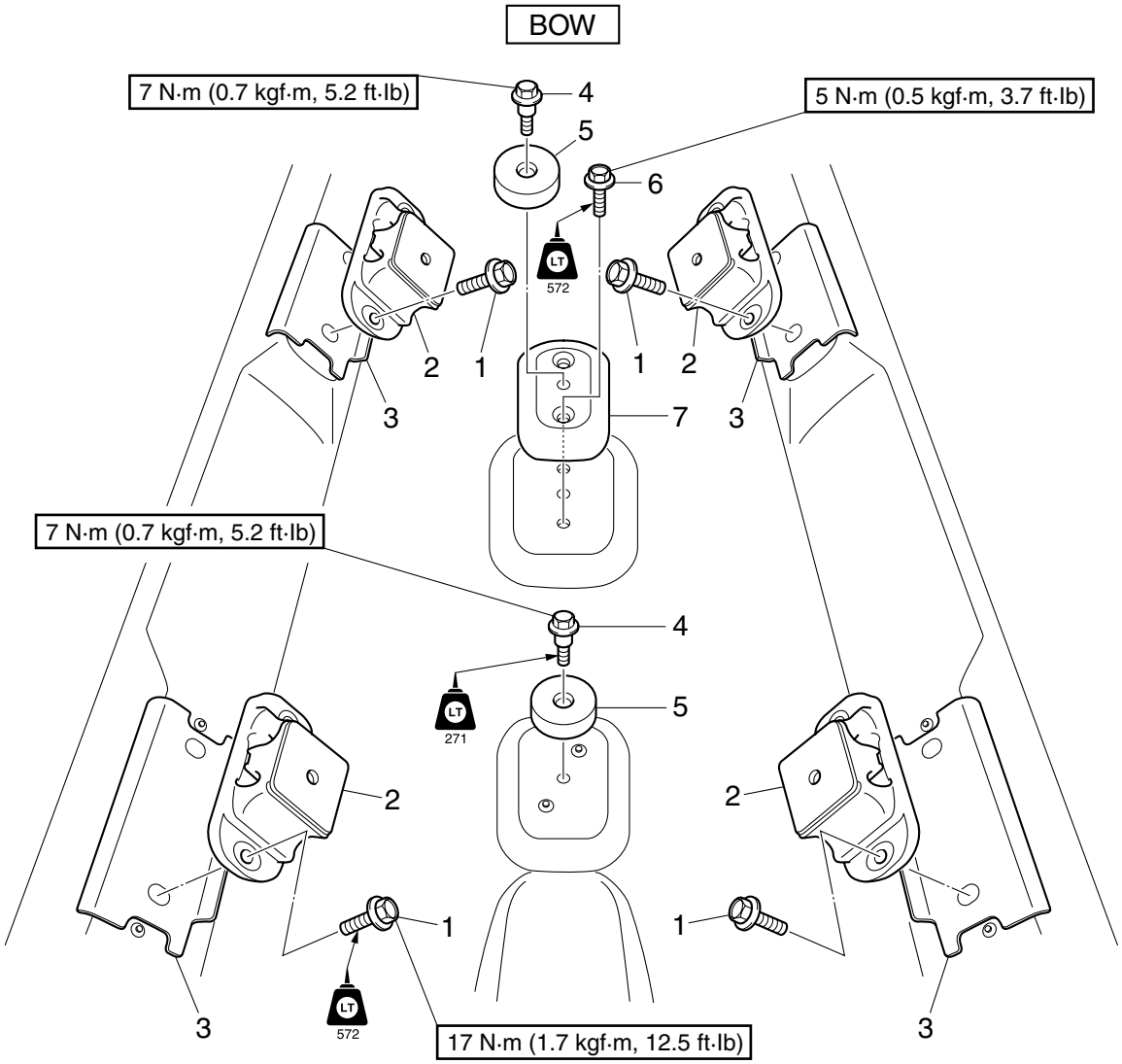

No.	Part name	Q'ty	Remarks
1	Bolt	8	M8 × 35 mm
2	Engine mount	4	
3	Liner	4	
4	Bolt	2	M6 × 13 mm
5	Stopper	2	
6	Bolt	2	M6 × 25 mm
7	Spacer	1	

Engine unit removal

NOTICE

Before removing the engine, make sure to take adequate measures to protect the deck opening from damage.

1. Disconnect the negative battery cable ①, and then disconnect the positive battery cable ②.

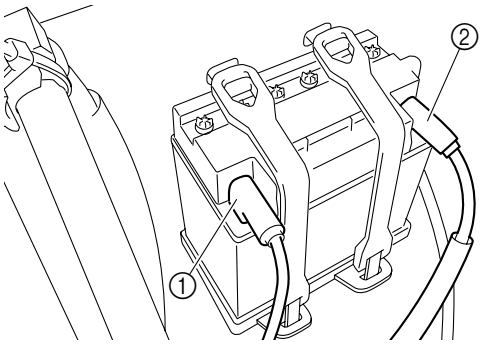

2. Extract the engine oil. See “Engine oil change” (3-10).

3. Remove the service lid ③.

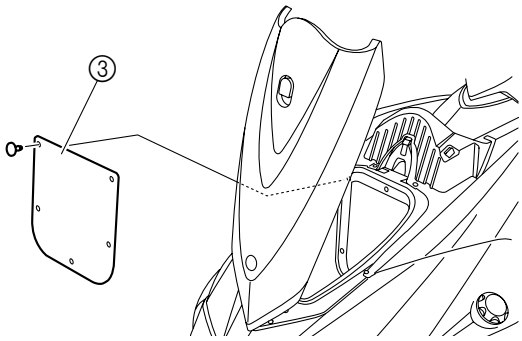

4. Remove the fuel hose ④ and air filter case assy. ⑤. See “Air filter case removal” (4-12). **WARNING! Make sure to disconnect the quick connector slowly, otherwise pressurized fuel could spray out.**

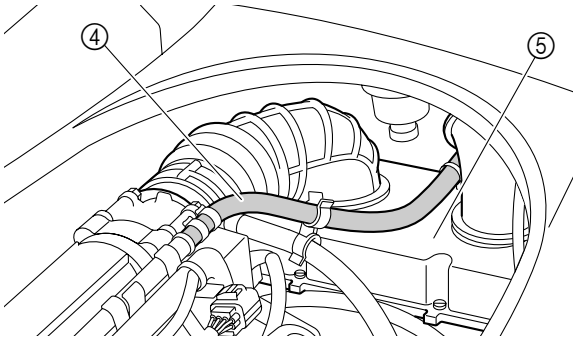

5. Disconnect the fuel pump module coupler ⑥.

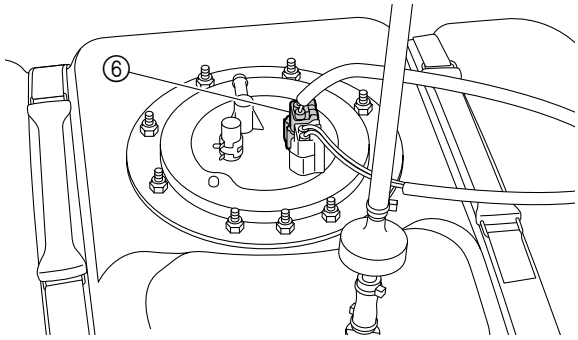

6. Remove the antenna holders ⑦. (VX Cruiser and VX Deluxe)

7. Disconnect the remote control receiver coupler ⑧. (VX Cruiser and VX Deluxe)

8. Disconnect the APS coupler ⑨.

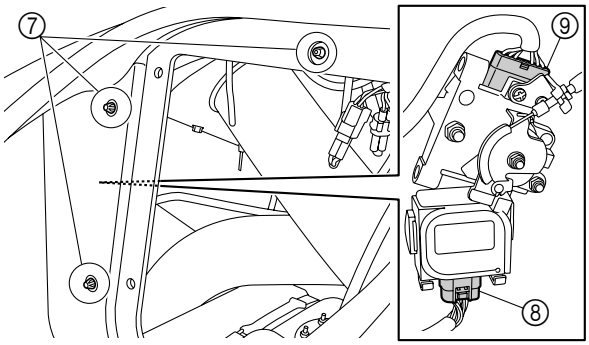

9. Disconnect the multifunction meter, sensor, and switch couplers ⑩.

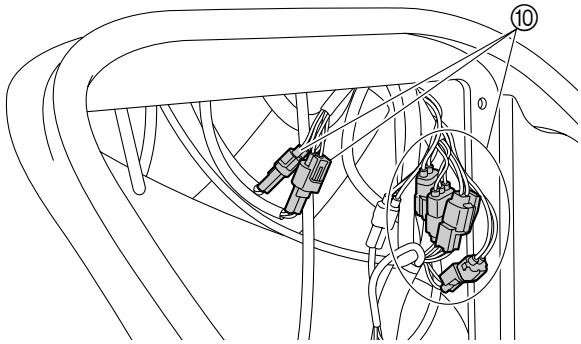

10. Remove the wiring harness from the plastic ties ⑪.

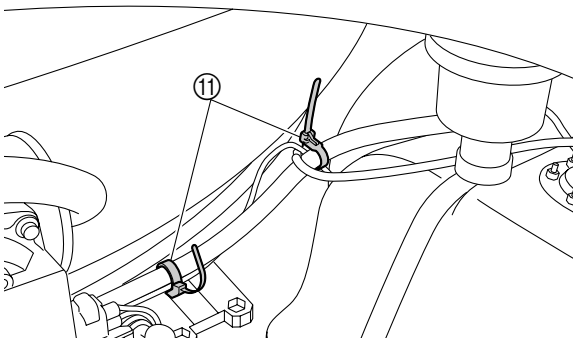

11. Disconnect the cooling water hose ⑫ from exhaust pipe 2.

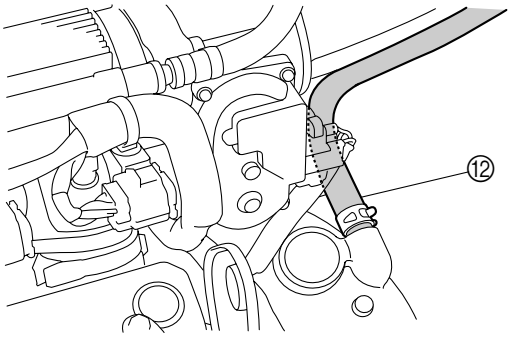

12. Remove the band ⑬, and then disconnect the cooling water hose ⑭ from the cylinder head.

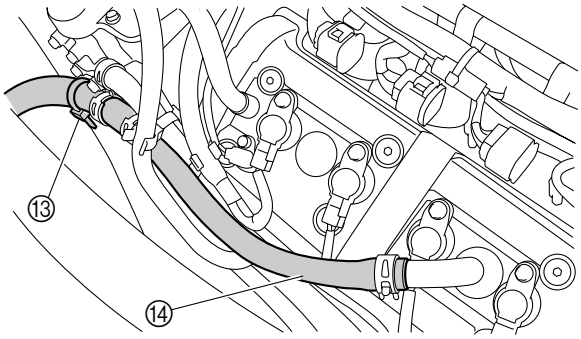

13. Remove the electrical plate assy. ⑮.

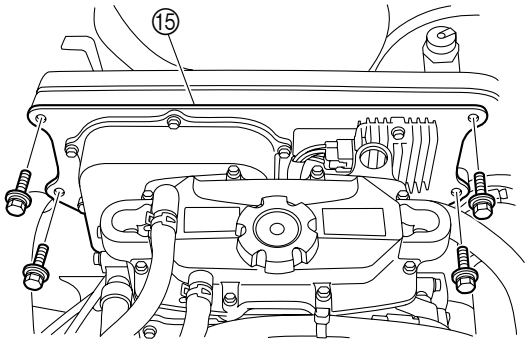

14. Remove the wiring harness from the plastic tie ⑯.

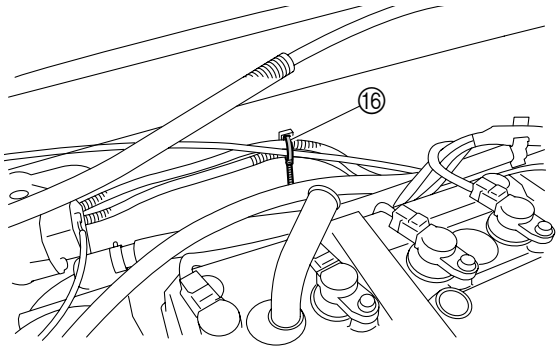

15. Remove the fuse box assy. ⑰.

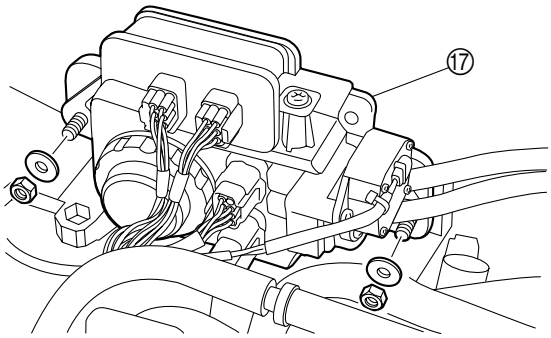

16. Disconnect the cooling water hose ⑱ from hose joint 1 ⑲.

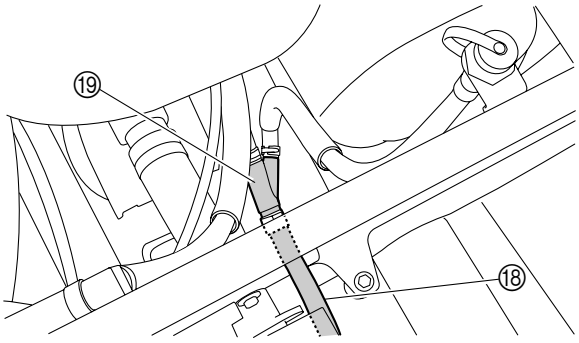

17. Remove the joints ⑳ and exhaust joint ㉑.

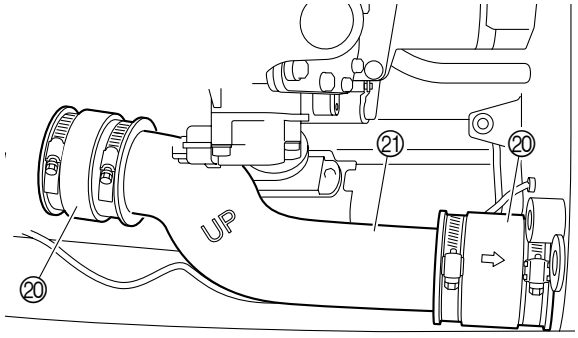

18. Place a cloth under the oil filter ㉒, and then remove it with the special service tool ㉓.

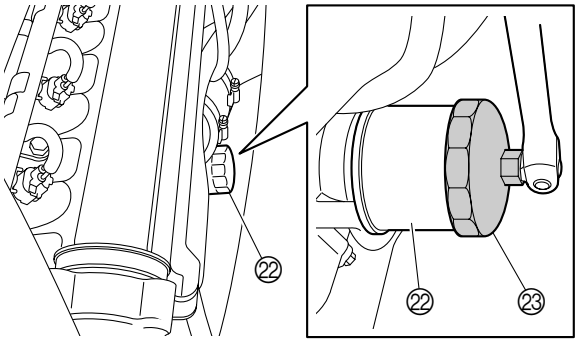

Oil filter wrench 64 ㉓:
YB-01426/90890-01426

TIP:
Make sure to clean up any oil spills.

19. Remove the coupling cover ㉔ and collar ㉕.

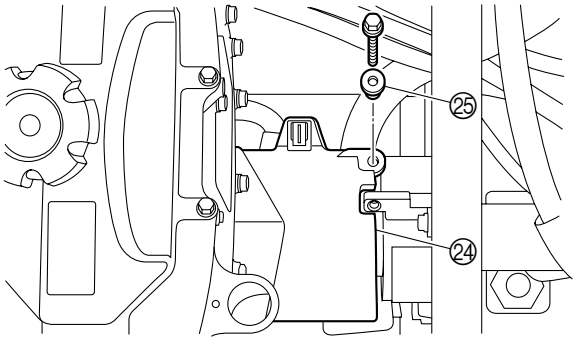

20. Loosen the engine mounting bolts ㉖.

21. Lift the engine unit slightly, remove the shims ㉗, and then lower the unit.

TIP:
Make a note of the position of each removed shim so that it can be installed in its original position.

22. Remove the engine mounting bolts ㉖.

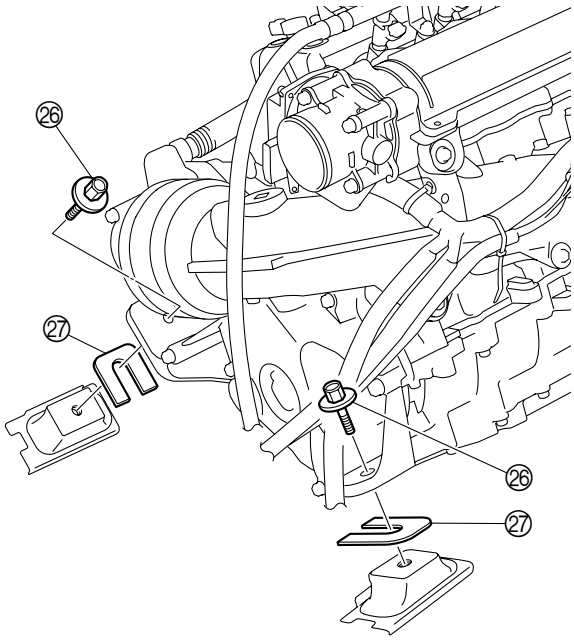

23. Suspend the engine unit using all 3 engine hangers, and then separate the unit from the engine mounts and move it forward to disconnect the coupling.

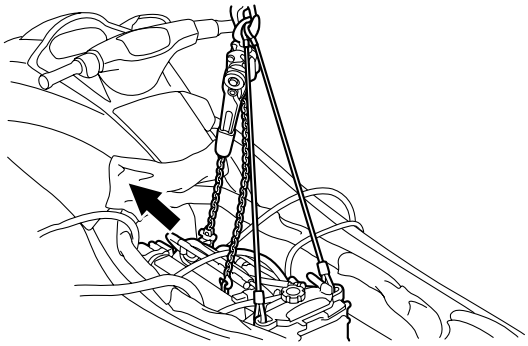

24. Lift the engine unit slightly, and then lower the front of the unit. Repeat this step until the engine unit can be removed from the engine compartment. ***NOTICE:*** **When removing the engine unit, take care to avoid causing damage to the hull liner and deck opening.**

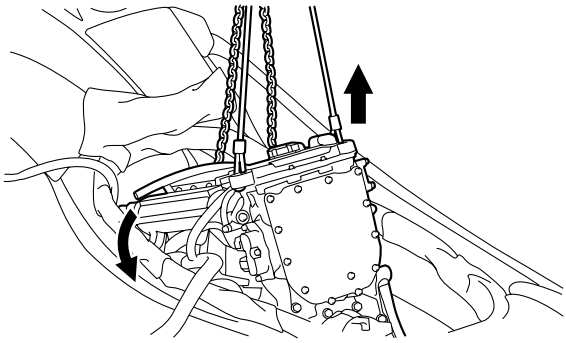

25. Lift the engine unit out vertically.

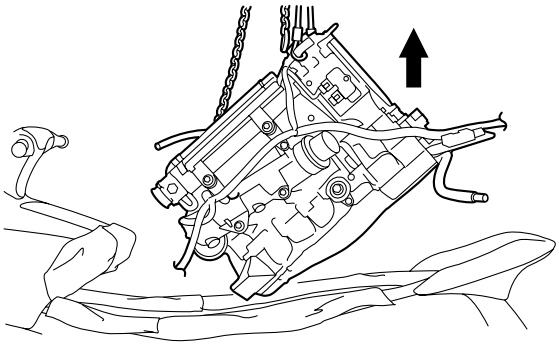

Engine mount, stopper, and spacer check

1. Check the engine mounts ①. Replace if cracked or damaged.

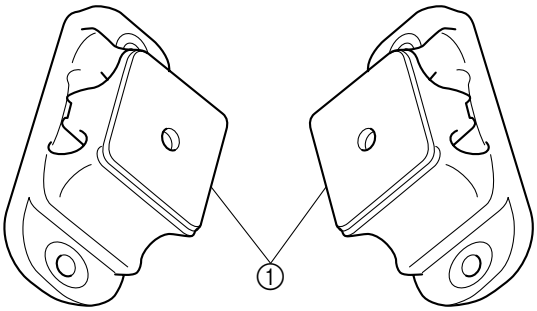

TIP:

- Make a note of the position of each engine mount so that it can be installed in its original position.
- When replacing the engine mounts, make sure to check the coupling clearance.

2. Check the stoppers ② and spacer ③. Replace if cracked or damaged.

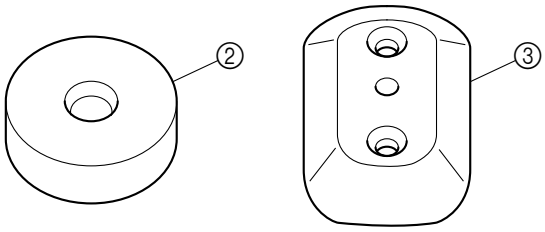

Engine unit installation

NOTICE

When installing the engine unit, take care to avoid causing damage to the hull liner and deck opening.

1. Suspend the engine unit using all 3 engine hangers.
2. Lower the front of the engine unit.
3. Lower the engine unit into the engine compartment vertically.

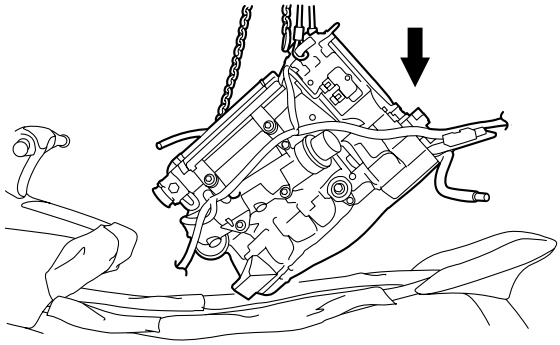

4. Lift the front of the engine unit slightly, and then lower the unit. Repeat this step until the drive and driven couplings are aligned.

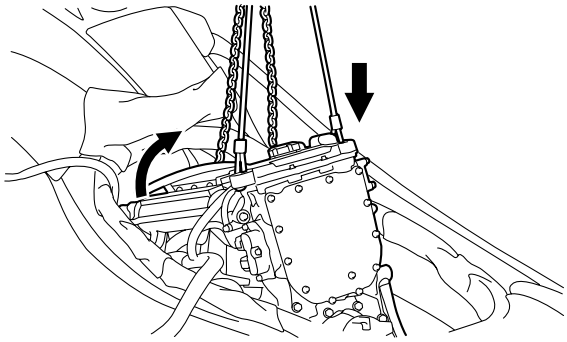

5. Move the engine unit rearward to connect the coupling ①, and then lower the unit onto the engine mounts.

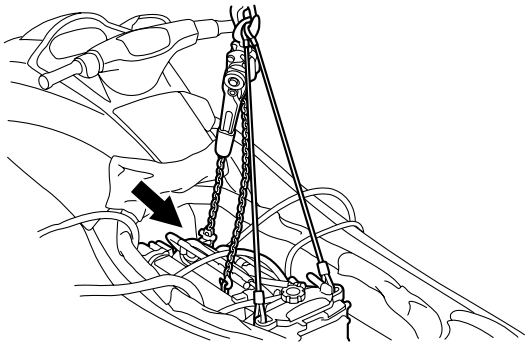

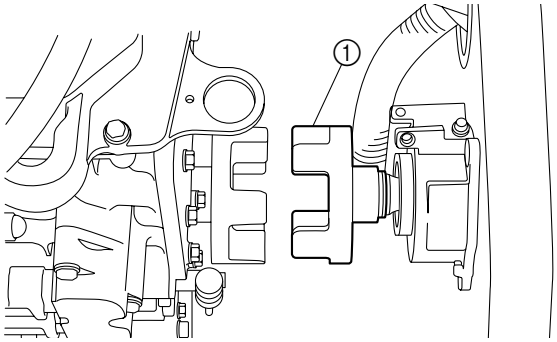

TIP:
Do not install the rubber damper until the coupling clearance adjustment has been made.

6. Temporarily install the engine mounting bolts ②.

7. Lift the engine unit slightly, install the shims ③, and then lower the unit.

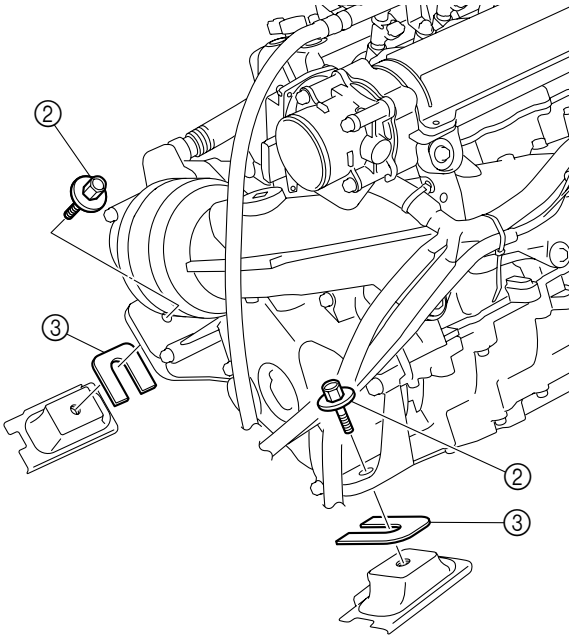

TIP:
Install the shims in their original positions.

8. Measure the coupling clearance ⓐ, and if necessary, add or remove shims ③ so that the clearance is within specification.

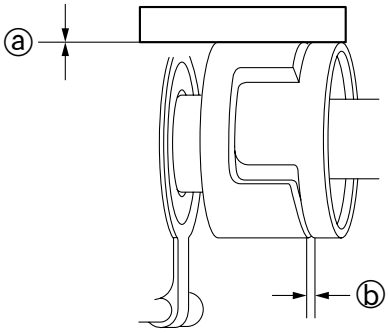

Clearance ⓐ:
Less than 1.0 mm (0.039 in) (without rubber damper)
Clearance ⓑ:
2.0–4.0 mm (0.079–0.157 in)

Available shim thicknesses:
0.10, 0.30, 0.50, 1.00, and 2.00 mm

9. Lift the engine unit slightly, remove the shims, and then lower the engine unit.

10. Remove the engine mounting bolts.

11. Separate the engine unit from the engine mounts and move it forward to disconnect the coupling.

12. Install the rubber damper ④.

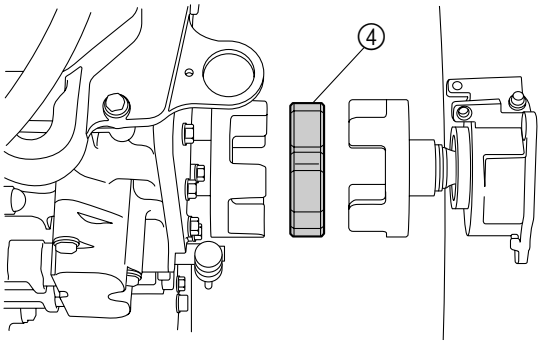

13. Adjust the position of the engine unit so that the coupling clearances ⓐ and ⓑ are within specification.

14. Tighten the engine mounting bolts ② to the specified torque.

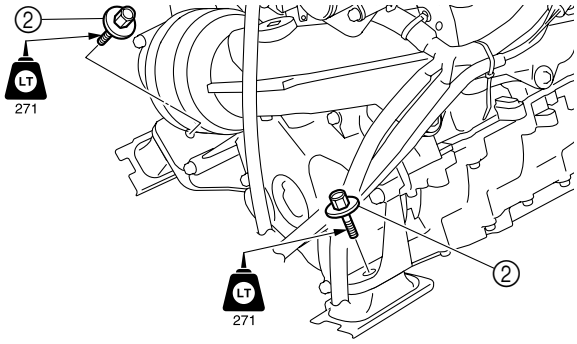

Engine mounting bolt ②: 17 N·m (1.7 kgf·m, 12.5 ft·lb)

15. Check that the coupling clearances ⓐ and ⓑ are within specification. Readjust if out of specification.

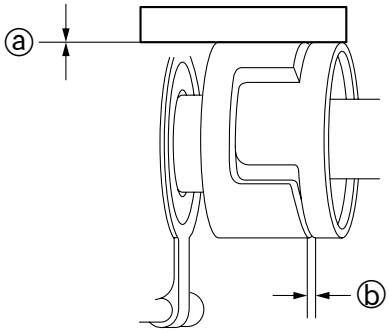

Clearance ⓐ: Less than 0.5 mm (0.020 in) (with rubber damper) Clearance ⓑ: 2.0–4.0 mm (0.079–0.157 in)

16. Install the coupling cover ⑤ and collar ⑥, and then tighten the bolt ⑦ to the specified torque.

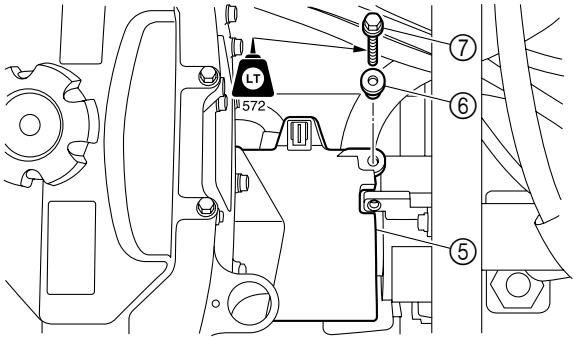

Coupling cover bolt ⑦: 8 N·m (0.8 kgf·m, 5.9 ft·lb)

17. Apply a thin coat of engine oil to the O-ring ⓒ of the oil filter ⑧.

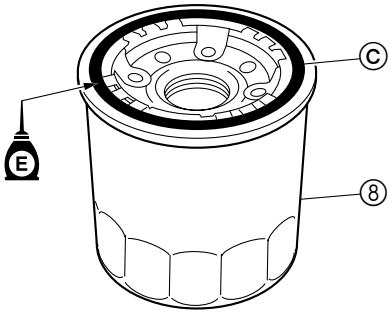

18. Install the oil filter ⑧, and then tighten it to the specified torque with the special service tool ⑨.

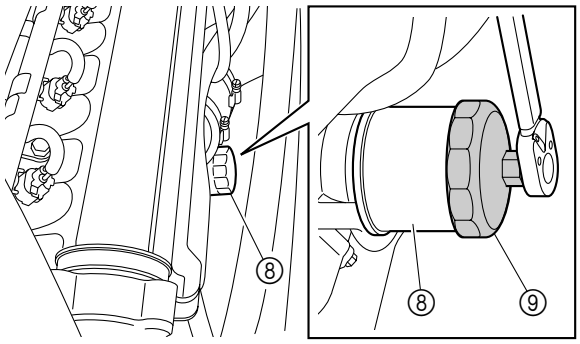

Oil filter wrench 64 ⑨: YB-01426/90890-01426

Oil filter ⑧: 18 N·m (1.8 kgf·m, 13.3 ft·lb)

19. Install the joint ⑩ and exhaust joint ⑪, and then tighten the clamps ⑫ and ⑬ to the specified torques.

20. Install the joint ⑭, and then tighten the clamps ⑮ and ⑯ to the specified torques.

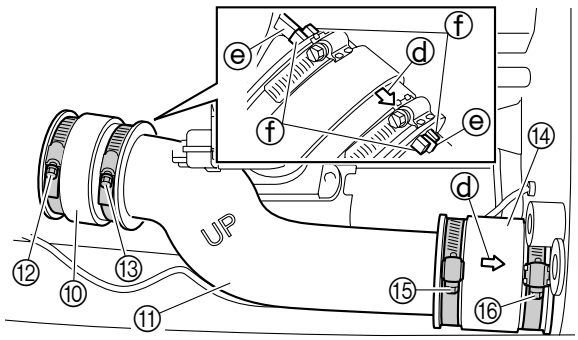

Joint clamps ⑫ and ⑯: 3.7 N·m (0.37 kgf·m, 2.7 ft·lb) Joint clamps ⑬ and ⑮: 2 N·m (0.2 kgf·m, 1.5 ft·lb)

TIP:
- Point the arrow mark ⓓ toward the stern.
- Fit the protrusions ⓔ on exhaust pipe 2 and the exhaust joint between the protrusions ⓕ on the joint.

21. Connect the cooling water hose ⑰ to hose joint 1 ⑱.

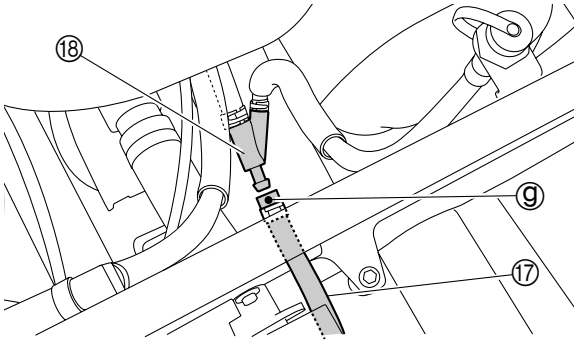

TIP:
Make sure that the white paint mark ⓖ on the cooling water hose faces up.

22. Install the fuse box assy. ⑲, and then tighten the nuts ⑳ to the specified torque.

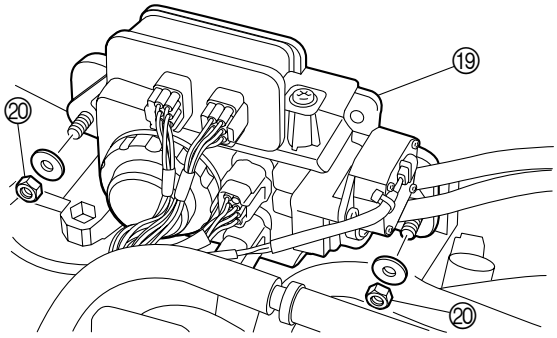

Fuse box nut ⑳: 17 N·m (1.7 kgf·m, 12.5 ft·lb)

23. Fasten the wiring harness with the plastic tie ㉑.

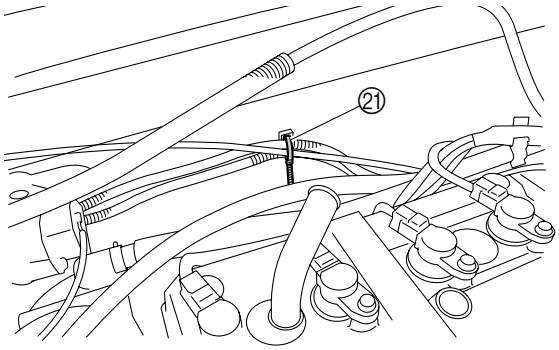

24. Install the electrical plate assy. ㉒, and then tighten the bolts ㉓ to the specified torque.

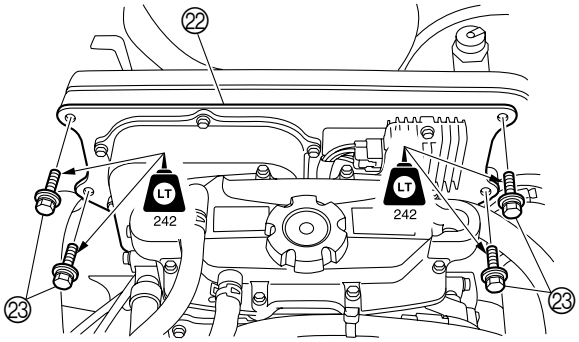

Electrical plate bolt ㉓: 17 N·m (1.7 kgf·m, 12.5 ft·lb)

25. Connect the cooling water hose ㉔ to the cylinder head, and then install a new band ㉕. ***NOTICE:*** **Do not reuse a band, always replace it with a new one.**

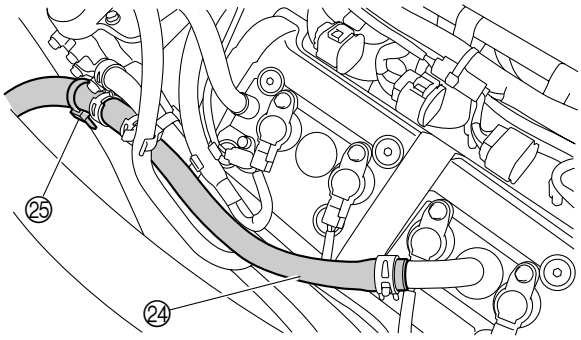

26. Connect the cooling water hose ㉖ to exhaust pipe 2.

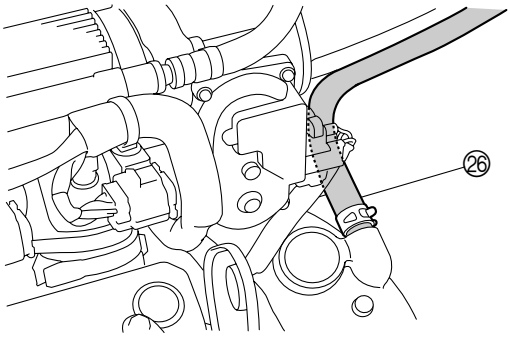

27. Fasten the wiring harness with the plastic ties ㉗.

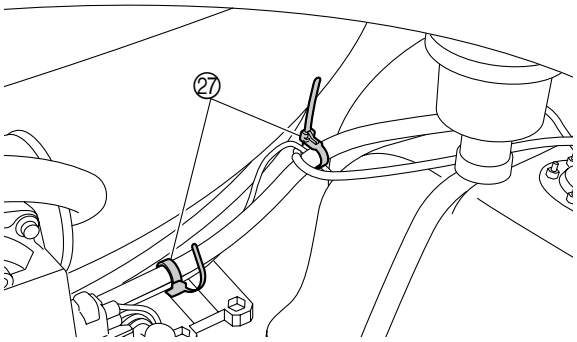

28. Connect the multifunction meter, sensor, and switch couplers ㉘.

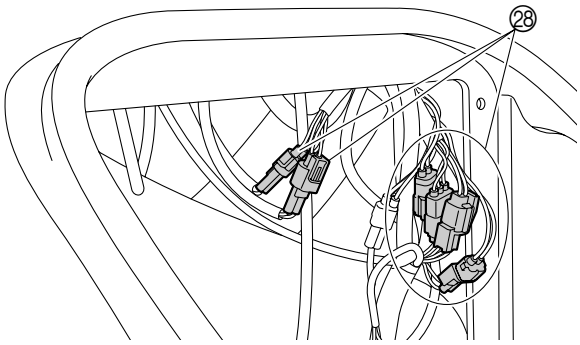

29. Connect the APS coupler ㉙.

30. Connect the remote control receiver coupler ㉚. (VX Cruiser and VX Deluxe)

31. Install the antenna holders ㉛. (VX Cruiser and VX Deluxe)

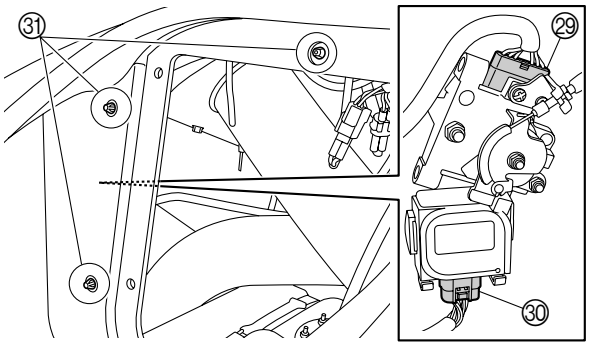

32. Connect the fuel pump module coupler ㉜ to the fuel pump module.

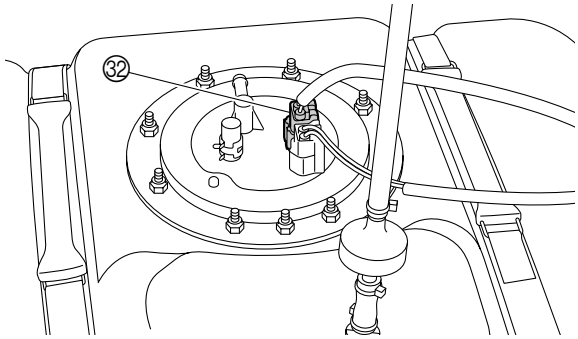

33. Install the air filter case assy. ㉝ and fuel hose ㉞. See “Air filter case installation” (4-13).

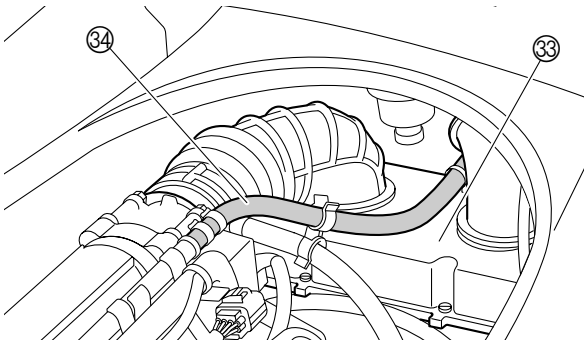

34. Install the service lid ㉟.

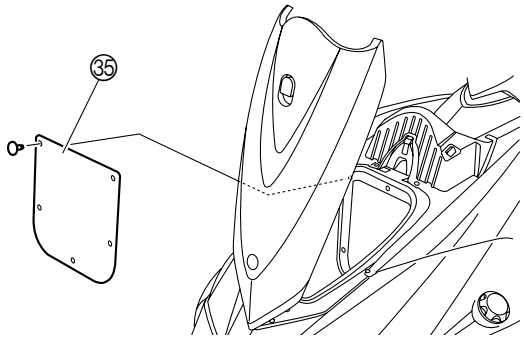

35. Fill the engine oil. See “Engine oil change” (3-10).

36. Connect the positive battery cable ㊱, and then connect the negative battery cable ㊲.

37. Coat the battery cable terminals and battery terminals with water resistance grease.

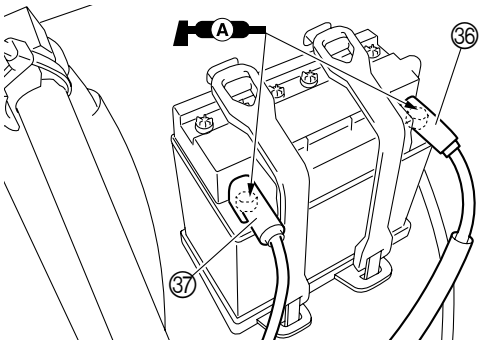

Wiring harness assy. and starter motor

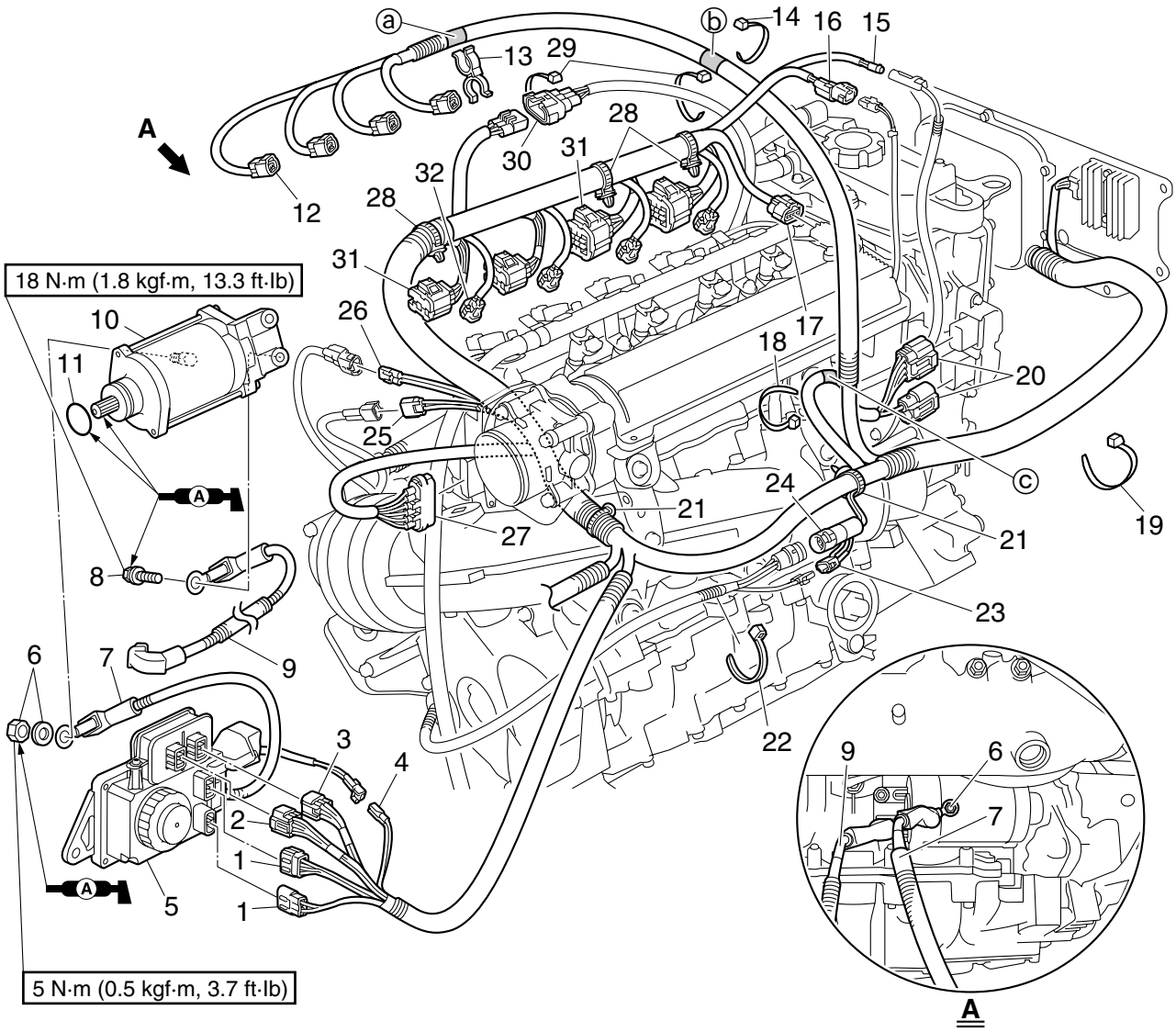

No.	Part name	Q'ty	Remarks
1	Fuse box coupler	2	
2	Main and fuel pump relay coupler	1	
3	ETV relay coupler	1	
4	Slant detection switch coupler	1	
5	Fuse box assy.	1	
6	Nut/Washer	1/1	
7	Starter motor cable	1	
8	Bolt	2	M8 × 30 mm
9	Negative battery cable	1	
10	Starter motor	1	
11	O-ring	1	
12	Ignition coil coupler	4	
13	Holder	1	ⓐ Gray tape
14	Plastic tie	1	ⓑ Gray tape
15	Oil pressure switch coupler	1	
16	Thermoswitch (exhaust) coupler	1	

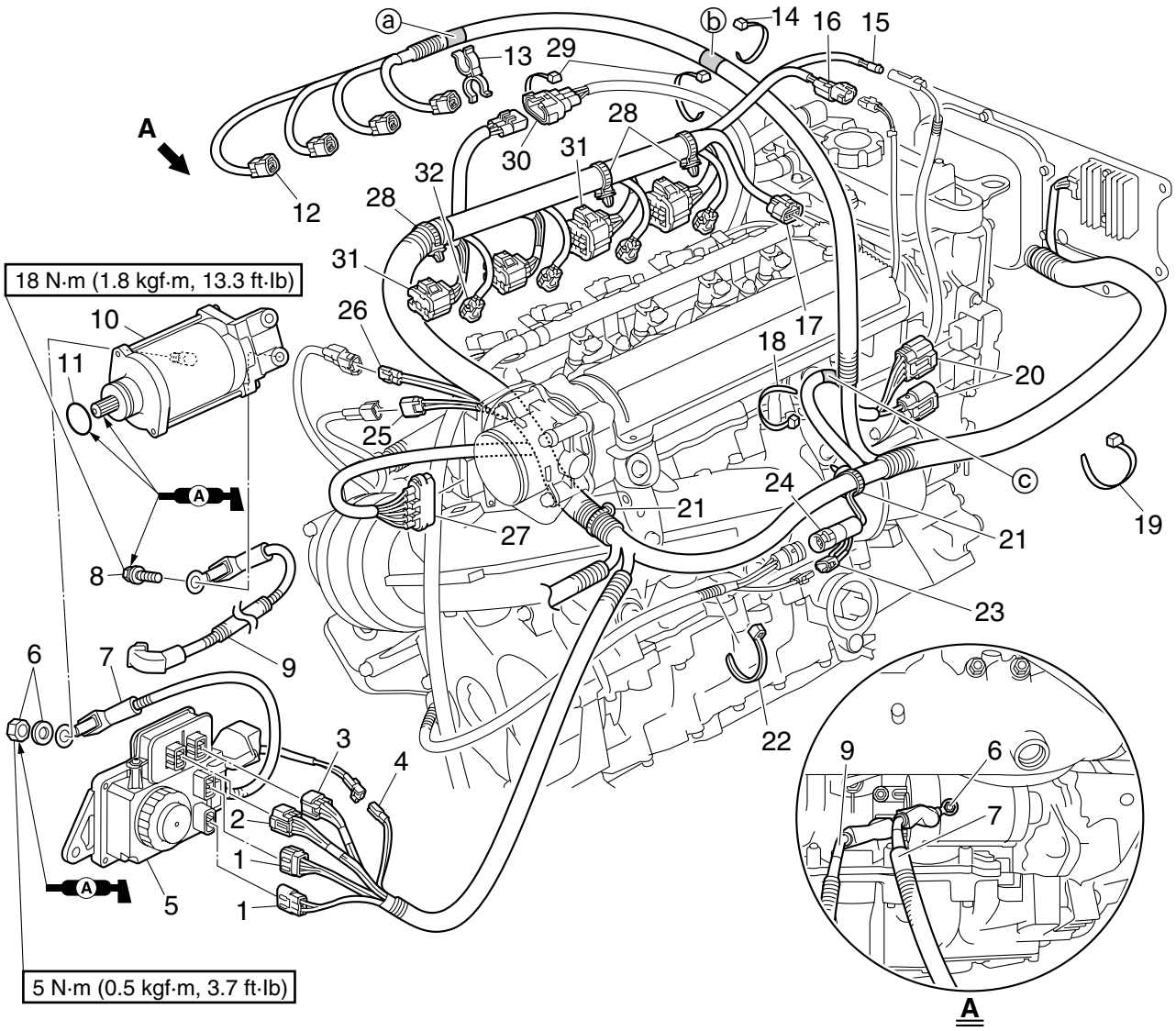

No.	Part name	Q'ty	Remarks
17	Sensor assy. coupler	1	
18	Plastic tie	1	ⓒ Gray tape
19	Plastic tie	1	
20	Earth plate coupler	2	
21	Holder	2	
22	Plastic tie	1	
23	Pickup coil coupler	1	
24	Stator coil coupler	1	
25	Engine temperature sensor coupler	1	
26	Thermoswitch (engine) coupler	1	
27	Throttle body assy. coupler	1	
28	Holder	3	
29	Band	2	**Not reusable**
30	Cam position sensor coupler	1	
31	Joint coupler	4	
32	Injector coupler	4	

Wiring harness assy. and starter motor removal

1. Disconnect the fuse box couplers ⓐ, main and fuel pump relay coupler ⓑ, ETV relay coupler ⓒ, and slant detection switch coupler ⓓ.

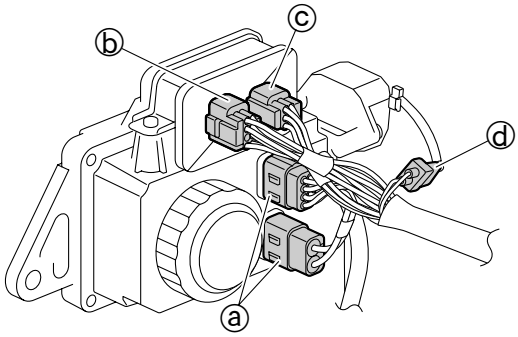

2. Disconnect the starter motor cable ① and negative battery cable ②, and then remove the starter motor ③.

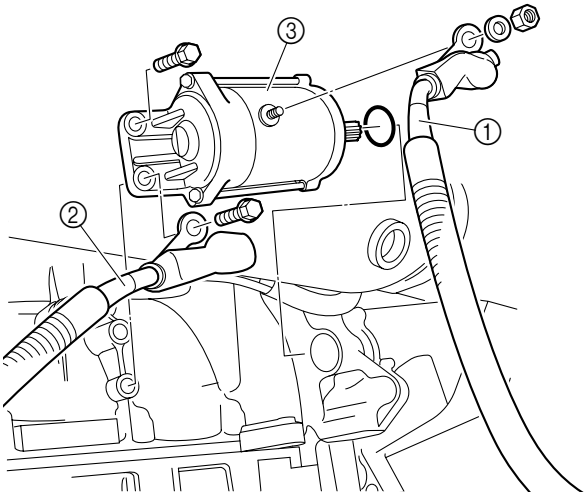

3. Disconnect the ignition coil couplers ⓔ, and remove the holder ④.

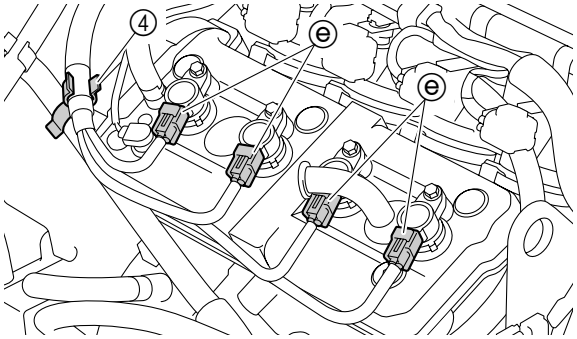

4. Remove the plastic tie ⑤, and then disconnect the oil pressure switch coupler ⓕ, thermoswitch (exhaust) coupler ⓖ, and sensor assy. coupler ⓗ.

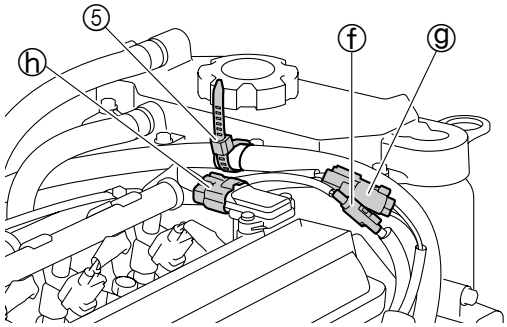

5. Remove the plastic tie ⑥, and then disconnect the earth plate couplers ⓚ.

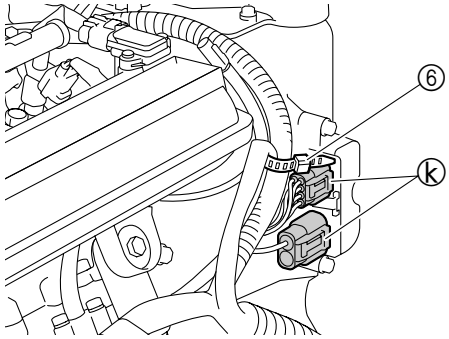

6. Remove the clamps ⑦ and plastic tie ⑧, and then disconnect the pickup coil coupler ⓜ and stator coil coupler ⓝ.

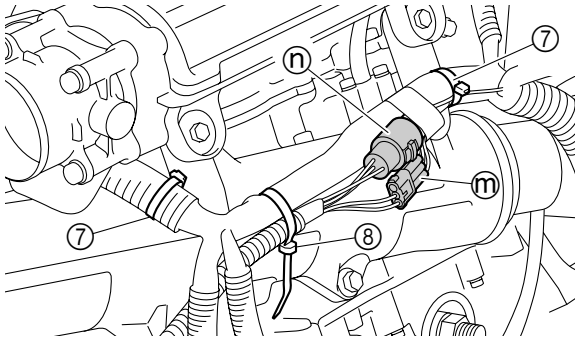

7. Disconnect the engine temperature sensor coupler ⓟ, thermoswitch (engine) coupler ⓡ, and throttle body assy. coupler ⓢ.

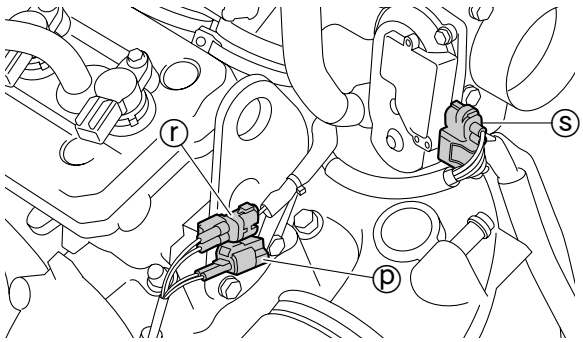

8. Remove the clamps ⑨ and bands ⑩, and then disconnect the cam position sensor coupler ⓣ and joint couplers ⓤ.

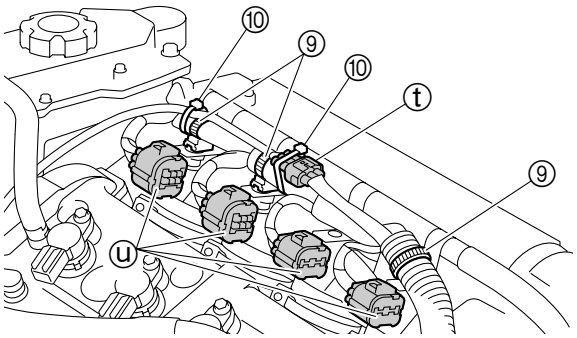

9. Disconnect the injector couplers ⓥ.

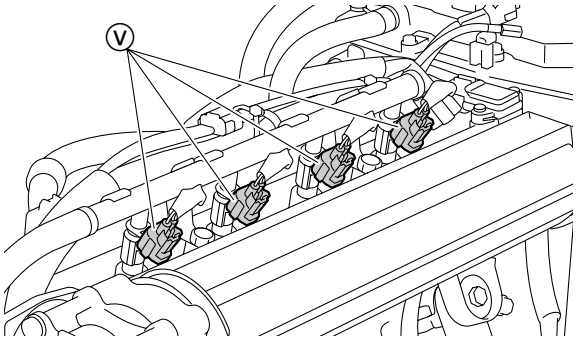

10. Disconnect the ECM couplers and rectifier regulator coupler. See “ECM and rectifier regulator” (7-6).

Wiring harness assy. check

1. Check the wiring harness assy. and couplers. Replace if cracked or damaged.

2. Check the wiring harness assy. for continuity. Replace if there is no continuity. See “Wiring diagram”.

Starter motor check

1. Check the starter motor. Replace if cracked or damaged. See “Starter motor” (7-32).

Wiring harness assy. and starter motor installation

1. Connect the ECM couplers and rectifier regulator coupler. See “ECM and rectifier regulator” (7-6).

2. Connect the injector couplers ⓐ.

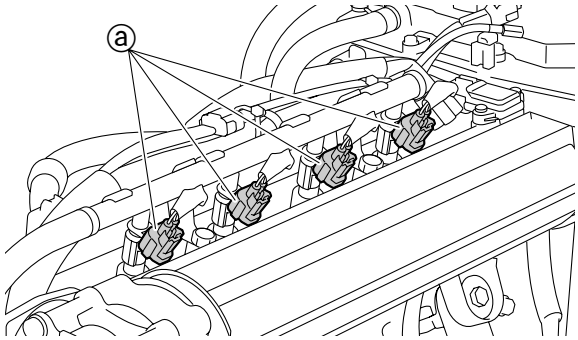

3. Connect the joint couplers ⓑ and cam position sensor coupler ⓒ, and then install the clamps ① and new bands ②.
NOTICE: **Do not reuse a band, always replace it with a new one.**

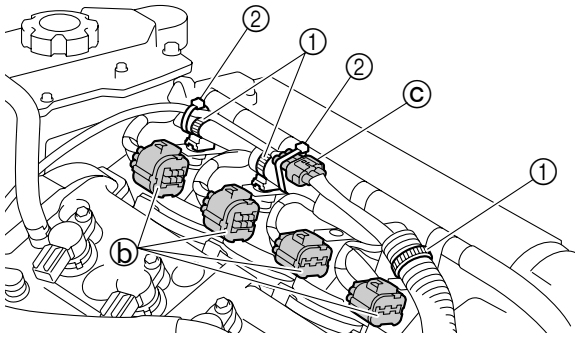

4. Connect the throttle body assy. coupler ⓓ, thermoswitch (engine) coupler ⓔ, and engine temperature sensor coupler ⓕ.

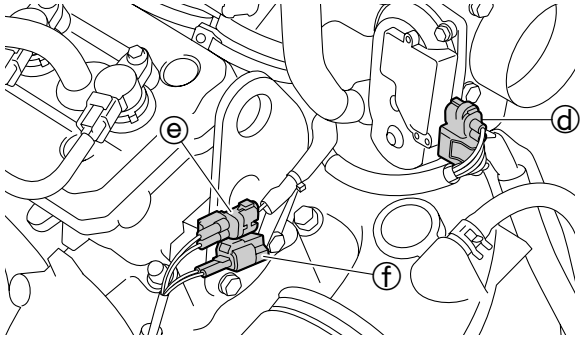

5. Connect the pickup coil coupler ⓖ and stator coil coupler ⓗ, and then install the clamps ③ and plastic tie ④.

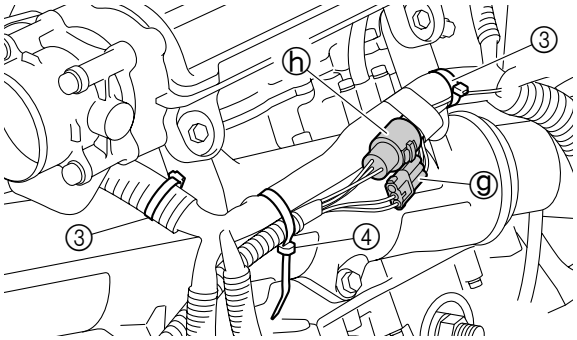

6. Connect the earth plate couplers ⓚ, and then install the plastic tie ⑤ and ⑥.

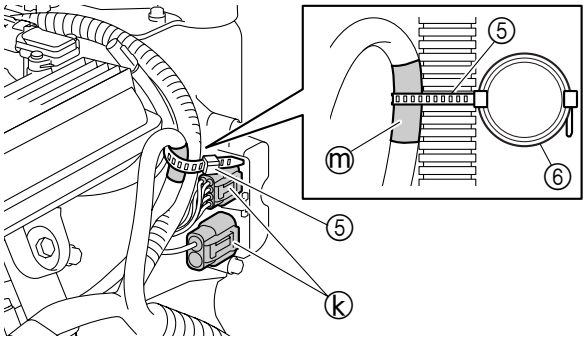

TIP:
Align the plastic tie ⑤ with the gray tape ⓜ on the wiring harness assy.

7. Connect the oil pressure switch coupler ⓝ, thermoswitch (exhaust) coupler ⓟ, and sensor assy. coupler ⓡ, and then install the plastic tie ⑦.

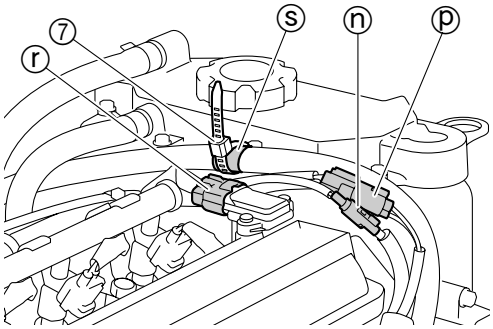

TIP:
Align the plastic tie ⑦ with the gray tape ⓢ on the wiring harness assy.

8. Connect the ignition coil couplers ⓣ, and then install the holder ⑧ to the cooling water hose (water jacket to exhaust pipe 1) ⑨.

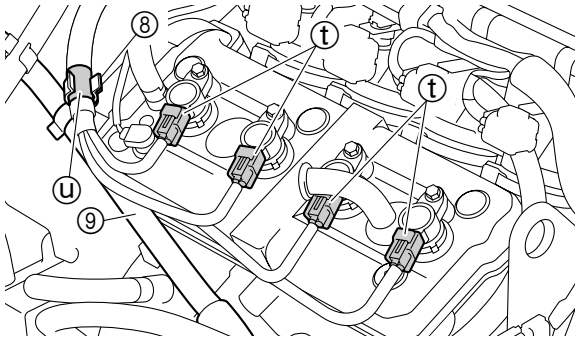

TIP:
Align the holder ⑧ with the gray tape ⓤ on the wiring harness assy.

9. Install the starter motor ⑩, new O-ring ⑪ and negative battery cable ⑫, and then tighten the bolts ⑬ to the specified torque. ***NOTICE:*** **Do not reuse an O-ring, always replace it with a new one.**

10. Install the starter motor cable ⑭, and then tighten the nut ⑮ to the specified torque.

11. Coat the negative battery cable terminal and starter motor cable terminal with water resistance grease.

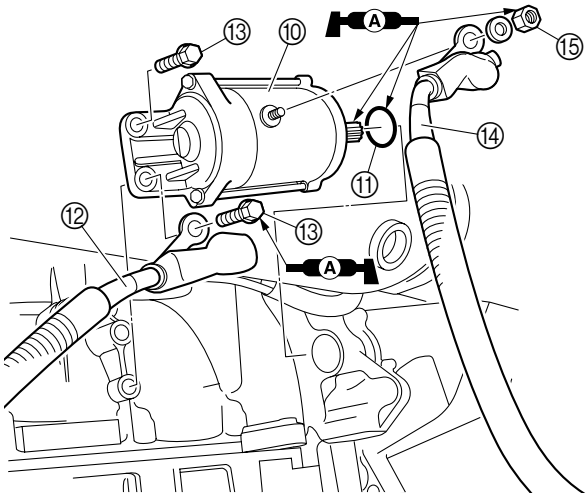

Starter motor bolt ⑬: 18 N·m (1.8 kgf·m, 13.3 ft·lb) Starter motor nut ⑮: 5 N·m (0.5 kgf·m, 3.7 ft·lb)

5

12. Connect the fuse box couplers ⓥ, main and fuel pump relay coupler ⓦ, ETV relay coupler ⓧ, and slant detection switch coupler ⓨ.

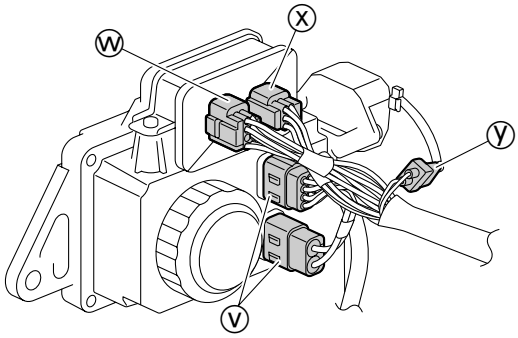

Intake assy.

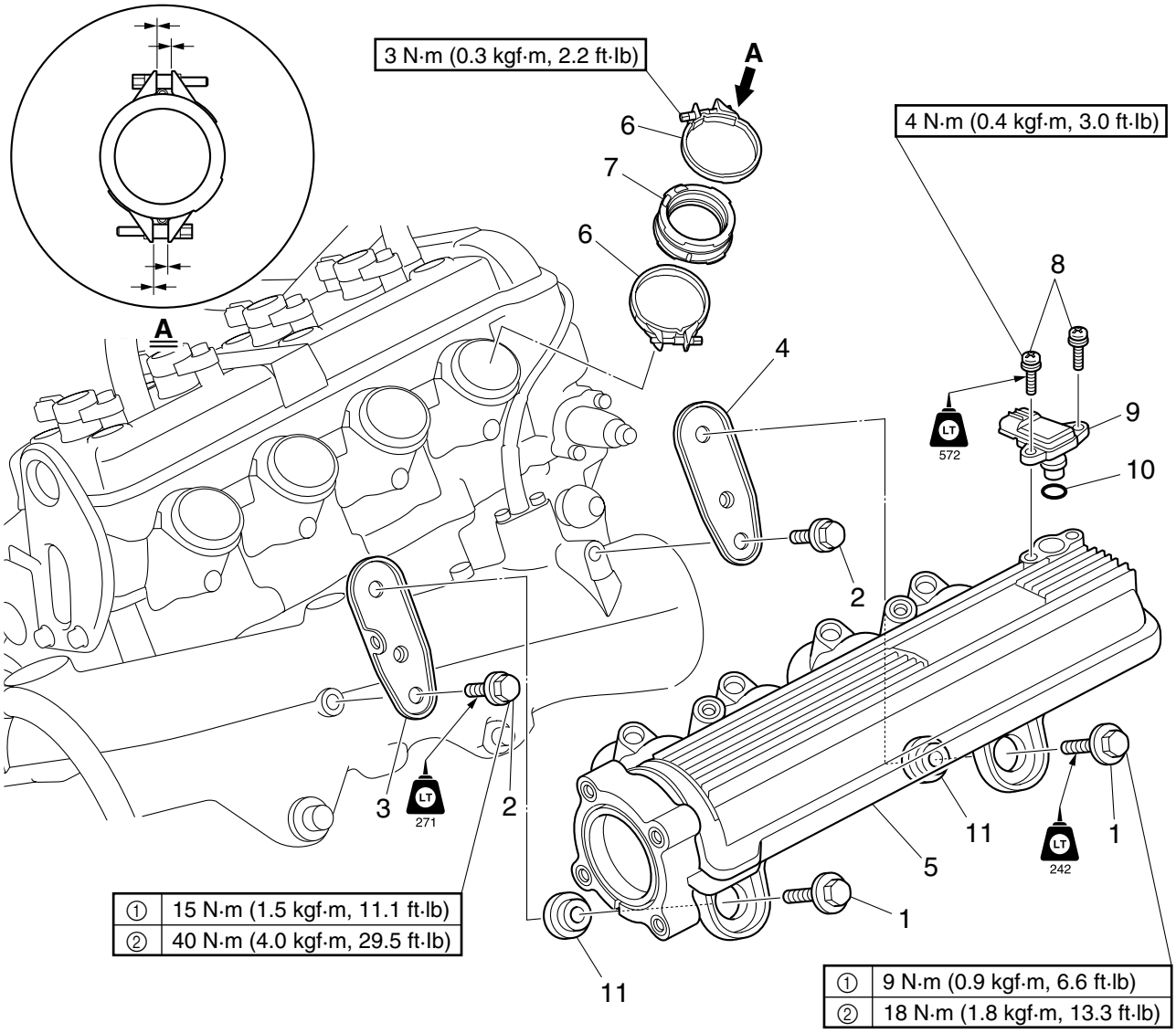

No.	Part name	Q'ty	Remarks
	Throttle body assy.		See "Air filter case and throttle body assy." (4-10).
	Fuel rail/fuel injector		See "Fuel pump module, fuel hose, and fuel rail" (4-1).
1	Bolt	2	M8 × 30 mm
2	Bolt	2	M8 × 20 mm
3	Stay	1	
4	Stay	1	
5	Intake manifold	1	
6	Clamp	8	
7	Intake manifold joint	4	
8	Screw	2	M5 × 15 mm
9	Sensor assy.	1	
10	O-ring	1	**Not reusable**
11	Collar	2	

Intake manifold removal

1. Remove the fuel rail and fuel injectors. See “Fuel pump module, fuel hose, and fuel rail” (4-1).

2. Remove the throttle body assy. See “Air filter case and throttle body assy.” (4-10).

3. Remove the stays ①.

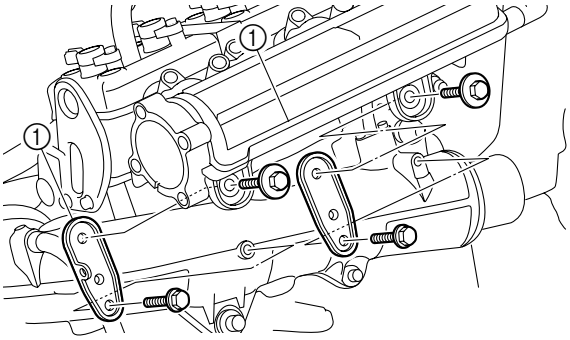

4. Loosen the engine side clamps ②, and then remove the intake manifold assy. ③.

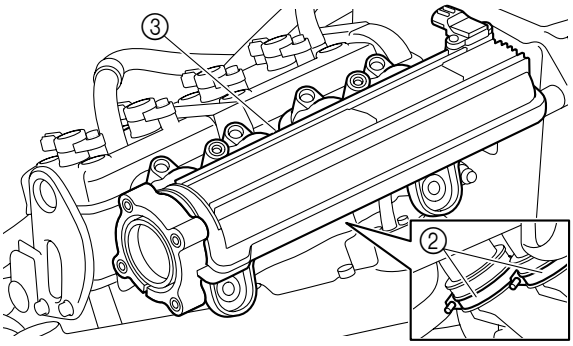

5. Remove the intake manifold joints ④ and clamps ⑤ from the intake manifold.

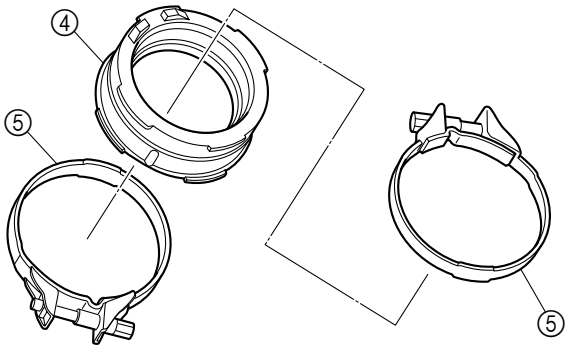

Intake manifold disassembly

1. Remove the sensor assy. ①, O-ring ②, and collars ③.

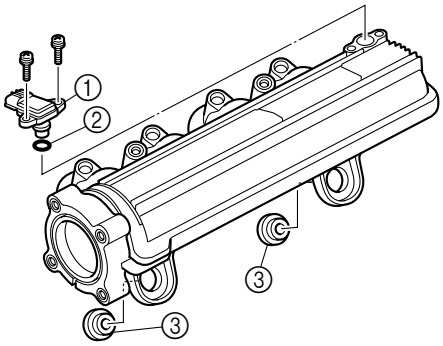

Intake manifold check

1. Check the intake manifold. Replace if cracked or damaged.

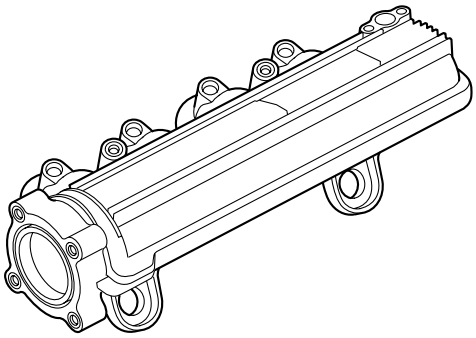

Intake manifold joint check

1. Check the intake manifold joints. Replace if cracked or damaged.

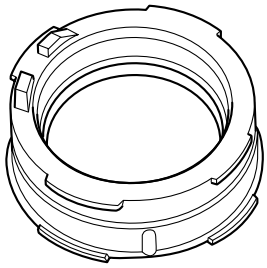

Intake manifold assembly

NOTICE

Do not reuse an O-ring, always replace it with a new one.

1. Install the collars ①, a new O-ring ②, and the sensor assy. ③, and then tighten the screws ④ to the specified torque.

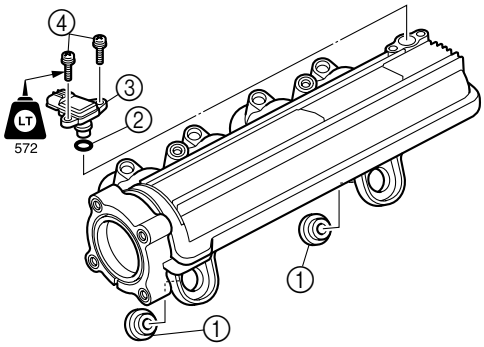

Sensor assy. screw ④: 4 N·m (0.4 kgf·m, 3.0 ft·lb)

Intake manifold installation

1. Install the clamps ① onto the intake manifold joints ②.

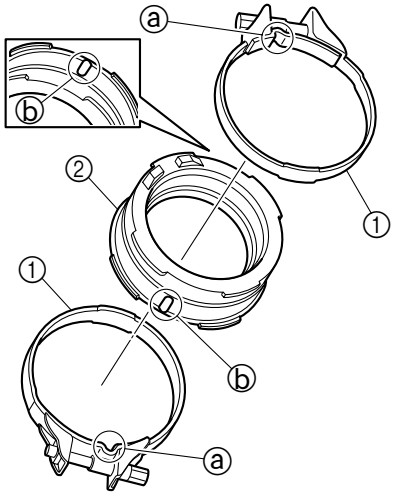

TIP:

- Align the recess ⓐ in the clamps ① with the protrusions ⓑ on the intake manifold joint ②.
- Install the clamps ① so that the clamp bolts are pointing in the directions shown.

2. Install each intake manifold joint assy. ③.

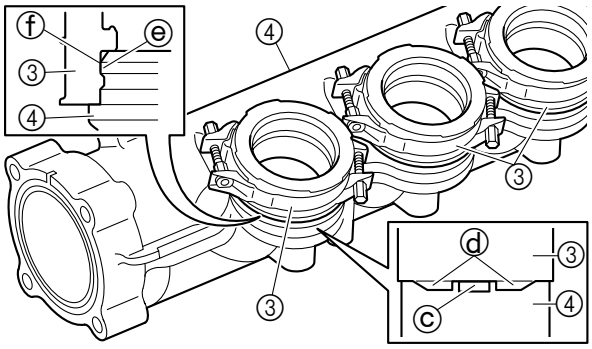

TIP:

- Fit the protrusion ⓒ on the intake manifold ④ between the protrusions ⓓ on the intake manifold joint assy. ③.
- Fit the lip ⓔ on the intake manifold ④ into the groove ⓕ in the intake manifold joint assy. ③.

3. Tighten the bolts ⑤ until the ends of the clamps ⑥ contact the spacers ⑦ around the bolts, and then tighten the bolts ⑤ to the specified torque.

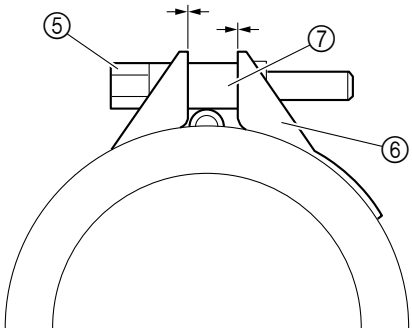

Intake manifold joint clamp bolt ⑤: 3 N·m (0.3 kgf·m, 2.2 ft·lb)

4. Install the intake manifold assy. ⑧.

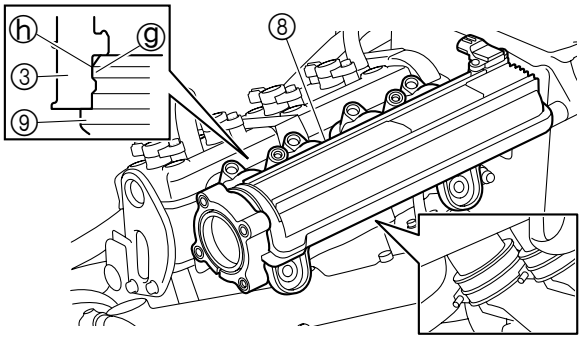

TIP:

Fit the lip ⓖ on the cylinder head ⑨ into the groove ⓗ in the intake manifold joint assy. ③.

5. Install the stays ⑩, temporarily install the bolts ⑪ and ⑫, and then tighten the bolts ⑪ to the specified torques in 2 stages.

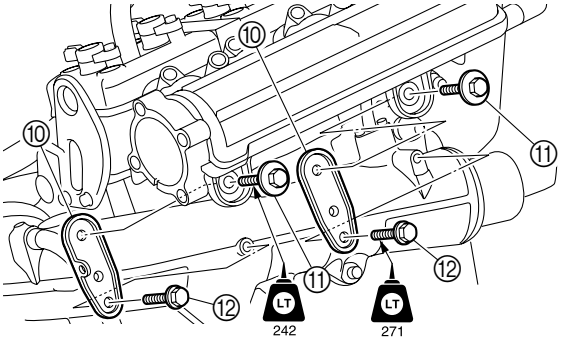

Intake manifold bolt ⑪: 1st: 9 N·m (0.9 kgf·m, 6.6 ft·lb) 2nd: 18 N·m (1.8 kgf·m, 13.3 ft·lb)

6. Tighten the bolts ⑫ to the specified torques in 2 stages.

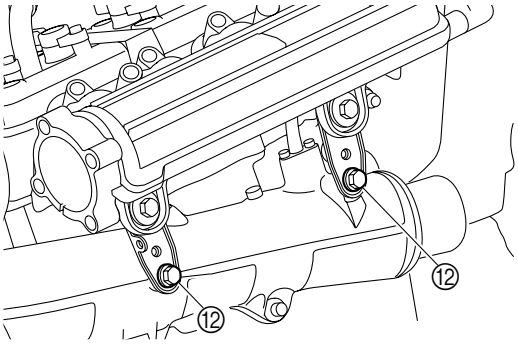

Stay bolt ⑫: 1st: 15 N·m (1.5 kgf·m, 11.1 ft·lb) 2nd: 40 N·m (4.0 kgf·m, 29.5 ft·lb)

7. Tighten the bolts ⑬ until both ends of the clamps ⑭ contact the spacers ⑮ around the bolts, and then tighten the bolts ⑬ to the specified torque.

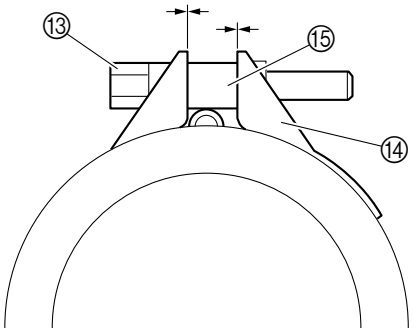

Intake manifold joint clamp bolt ⑬: 3 N·m (0.3 kgf·m, 2.2 ft·lb)

Muffler

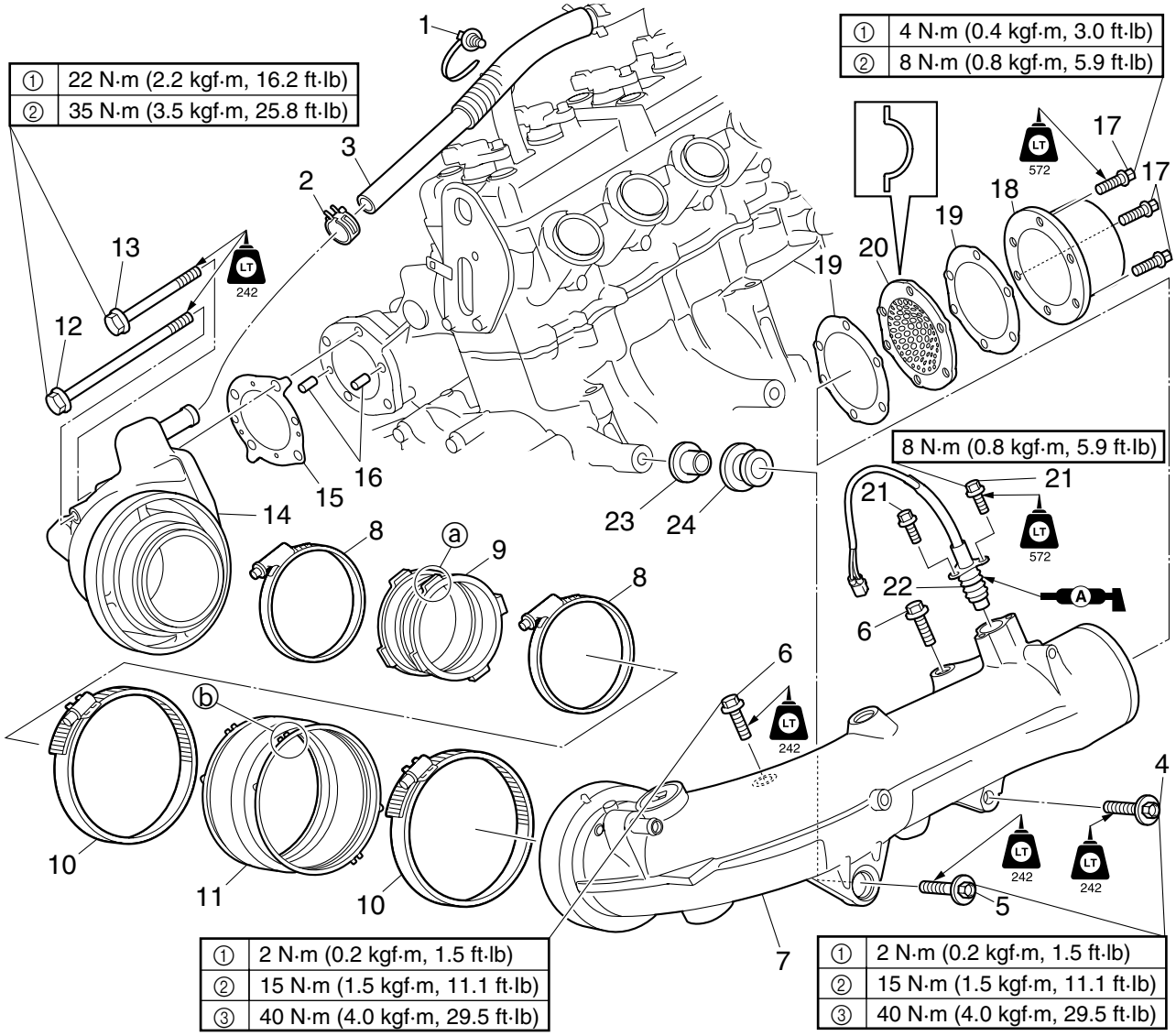

No.	Part name	Q'ty	Remarks
1	Plastic tie	1	
2	Clamp	1	
3	Cooling water hose	1	
4	Bolt	1	M10 × 40 mm
5	Bolt	1	M10 × 45 mm
6	Bolt	2	M10 × 35 mm
7	Exhaust pipe 2	1	
8	Clamp	2	
9	Inner exhaust joint	1	ⓐ Protrusion
10	Clamp	2	
11	Outer exhaust joint	1	ⓑ Protrusions
12	Bolt	2	M8 × 125 mm
13	Bolt	2	M8 × 75 mm
14	Exhaust pipe 1	1	
15	Gasket	1	**Not reusable**
16	Dowel pin	2	

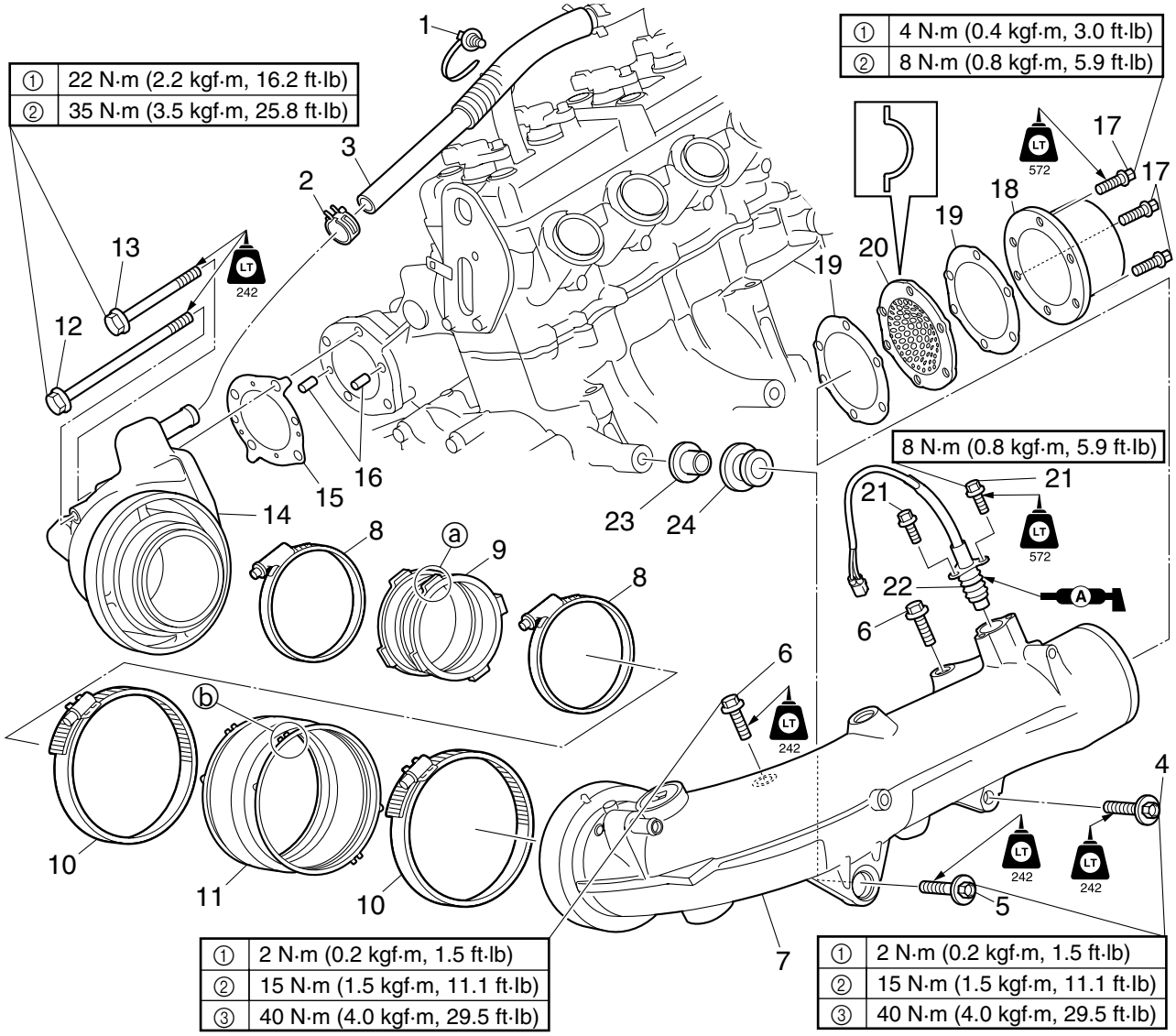

No.	Part name	Q'ty	Remarks
17	Bolt	3	M6 × 20 mm
18	Exhaust pipe end	1	
19	Gasket	2	**Not reusable**
20	Silencer	1	
21	Bolt	2	M6 × 16 mm
22	Thermoswitch (exhaust)	1	
23	Collar	1	
24	Grommet	1	

Exhaust manifold

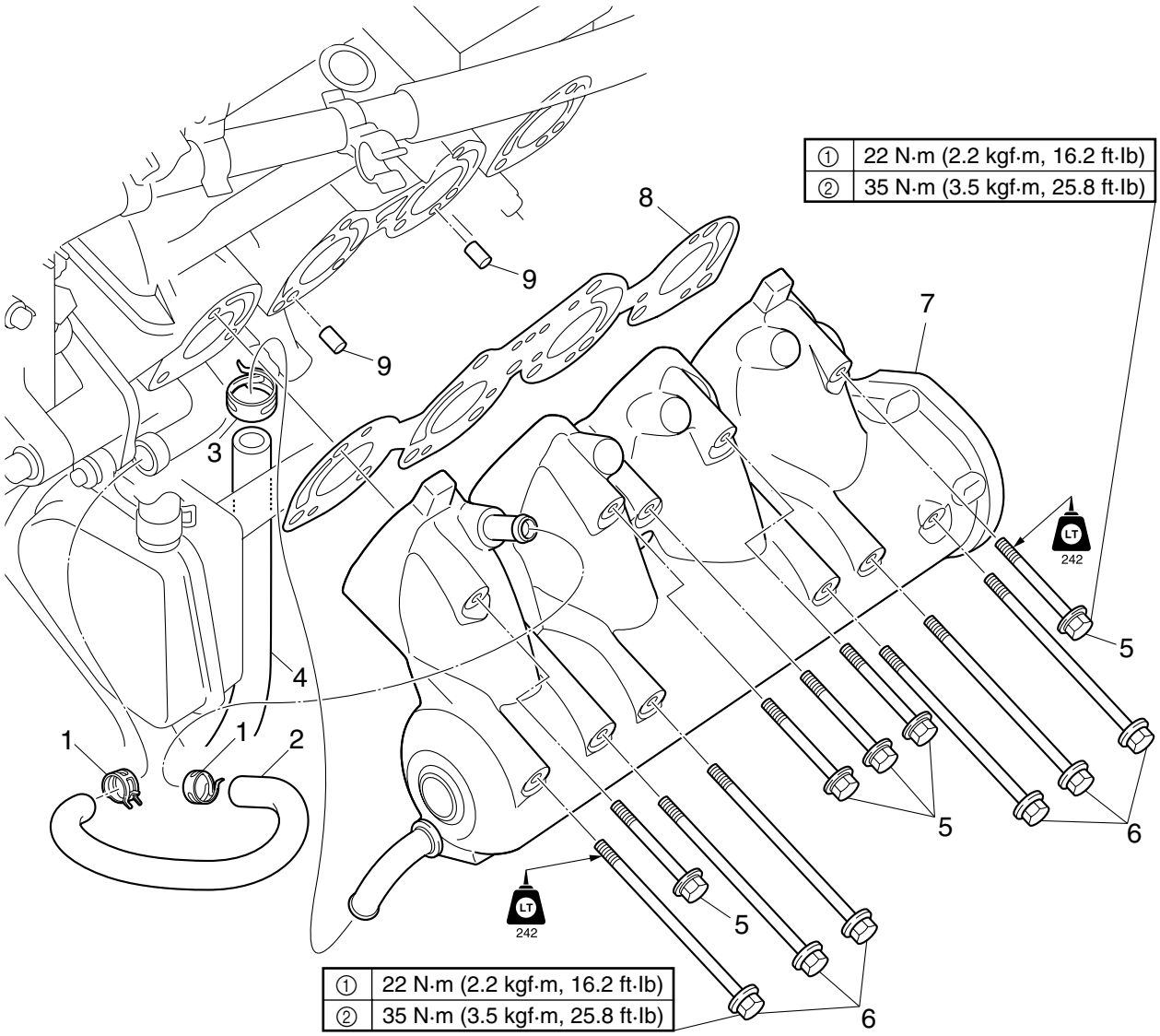

No.	Part name	Q'ty	Remarks
1	Clamp	2	
2	Cooling water hose	1	
3	Clamp	1	
4	Cooling water hose	1	
5	Bolt	5	M8 × 75 mm
6	Bolt	6	M8 × 154 mm
7	Exhaust manifold	1	
8	Gasket	1	**Not reusable**
9	Dowel pin	2	

Exhaust pipe removal

1. Remove the plastic tie ①.

2. Disconnect the cooling water hose ②.

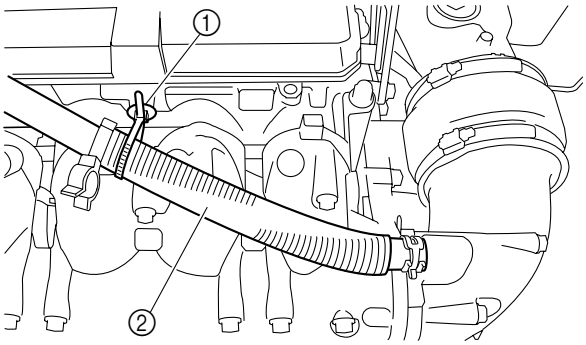

3. Loosen the clamps ③, and then slide the outer exhaust joint ④ toward exhaust pipe 1 ⑤.

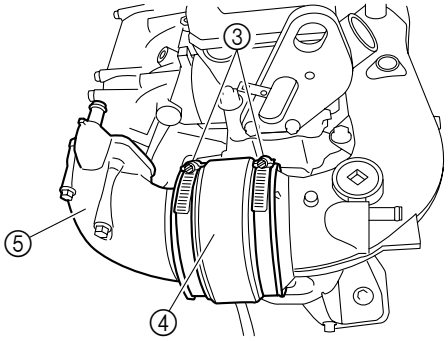

4. Loosen the clamps ⑥.

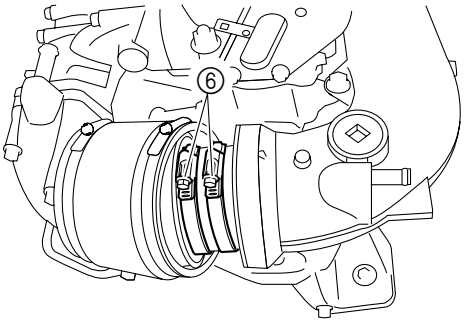

5. Remove exhaust pipe 2 ⑦, the collar, and the grommet.

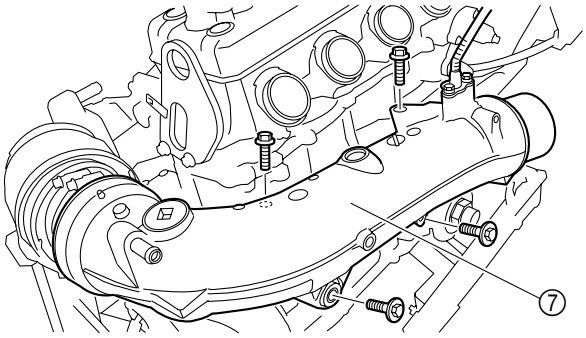

6. Remove the inner exhaust joint ⑧.

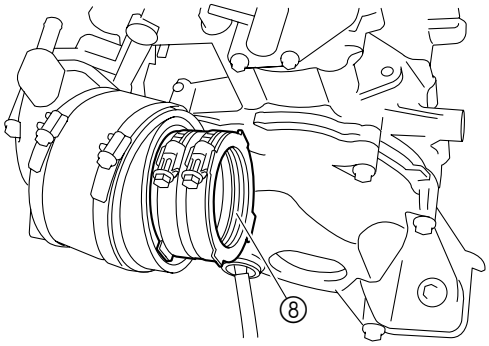

7. Remove the outer exhaust joint ⑨.

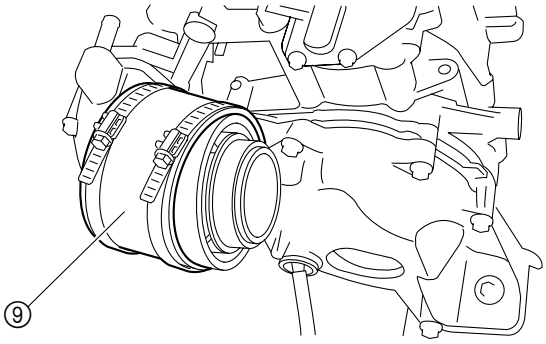

8. Remove exhaust pipe 1 ⑩, the gasket ⑪, and the dowel pins ⑫.

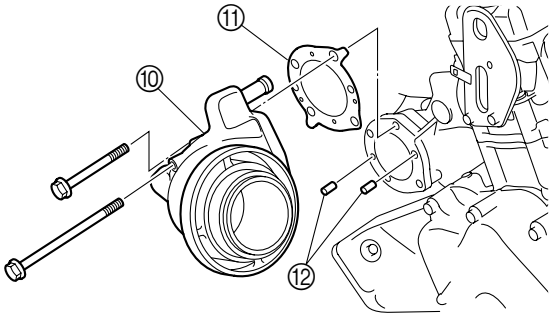

Exhaust manifold removal

1. Remove the cooling water hose ①.

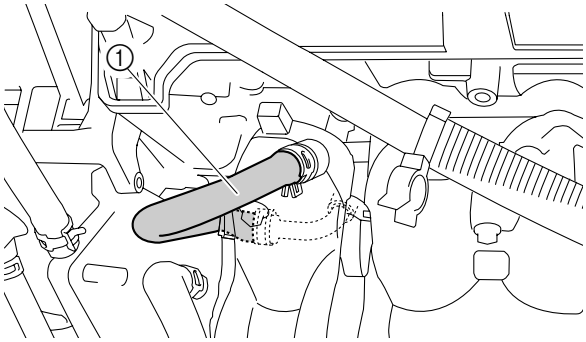

2. Disconnect the cooling water hose ②.

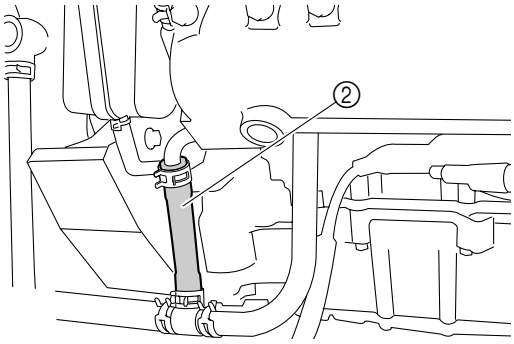

3. Remove the exhaust manifold ③, gasket, ④ and dowel pins ⑤.

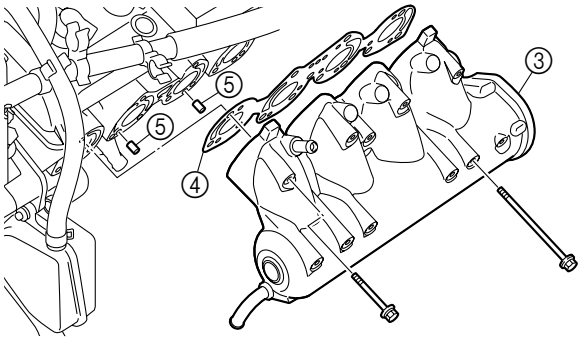

Exhaust pipe disassembly

1. Remove the exhaust pipe end ①, gaskets ②, and silencer ③.

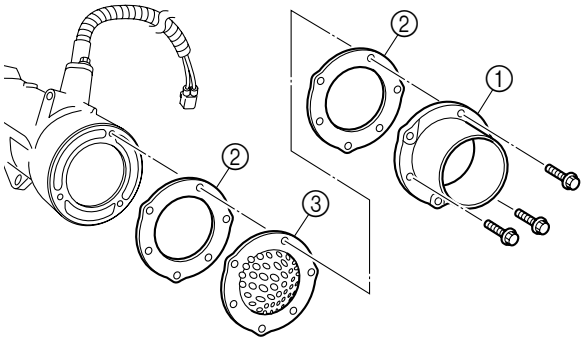

2. Remove the thermoswitch (exhaust) ④.

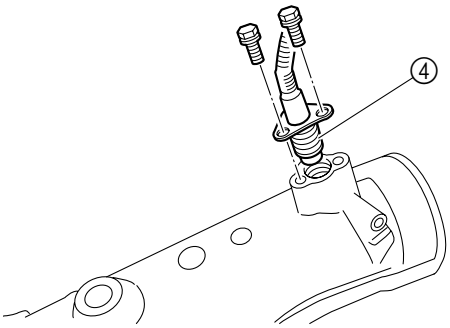

3. Remove the collar ⑤ and grommet ⑥.

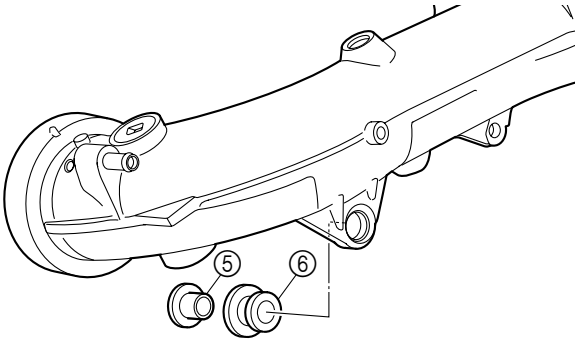

Exhaust pipe end and silencer check

1. Check the exhaust pipe end ① and silencer ②. Replace if cracked or damaged.

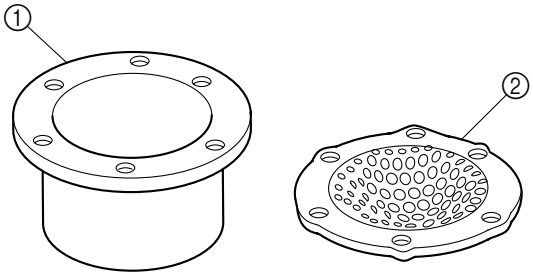

Exhaust pipe 1 and exhaust pipe 2 check

1. Check exhaust pipe 1 ① and exhaust pipe 2 ②. Replace if cracked or damaged.

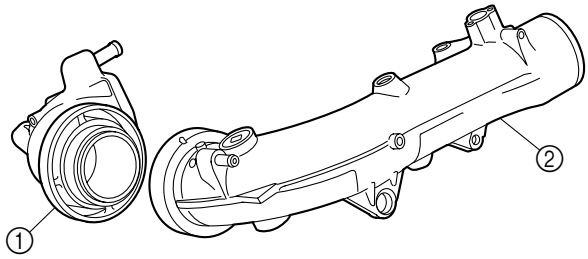

Exhaust manifold check

1. Check the exhaust manifold. Replace if cracked or damaged.

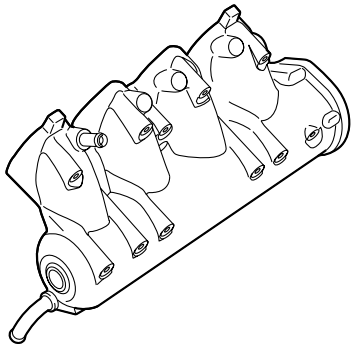

Exhaust joint check

1. Check the exhaust joints ①. Replace if cracked or damaged.

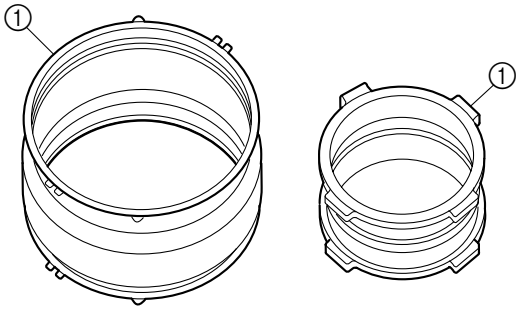

Thermoswitch (exhaust) check

1. Check the thermoswitch (exhaust). See “Thermoswitch (exhaust)” (7-16).

Exhaust pipe assembly

1. Install the grommet ① and collar ②.

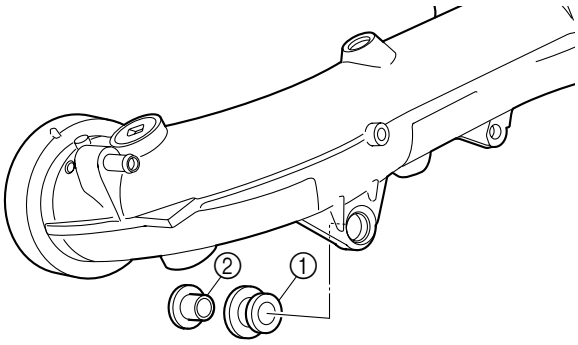

2. Install the thermoswitch (exhaust) ③, and then tighten the bolts ④ to the specified torque.

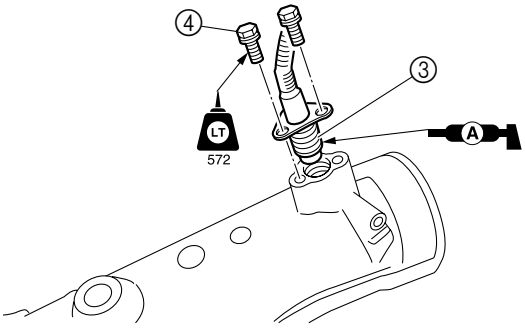

Thermoswitch bolt ④: 8 N·m (0.8 kgf·m, 5.9 ft·lb)

3. Install new gaskets ⑤, the silencer ⑥, and the exhaust pipe end ⑦, and then tighten the bolts ⑧ to the specified torques in 2 stages. ***NOTICE:*** **Do not reuse a gasket, always replace it with a new one.**

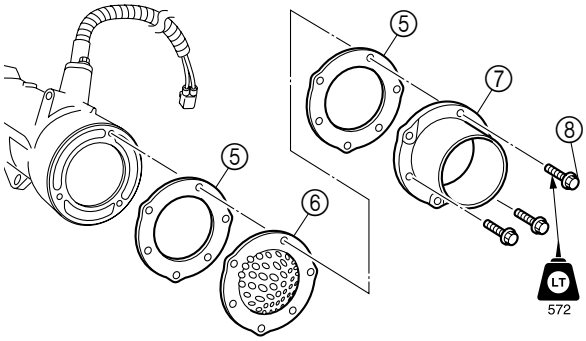

Exhaust pipe end bolt ⑧: 1st: 4 N·m (0.4 kgf·m, 3.0 ft·lb) 2nd: 8 N·m (0.8 kgf·m, 5.9 ft·lb)

Exhaust manifold installation

1. Install the dowel pins ①, a new gasket ②, and the exhaust manifold ③. ***NOTICE:*** **Do not reuse a gasket, always replace it with a new one.**

2. Tighten the bolts ④ to the specified torques in 2 stages and in the order [1], [2], and so on.

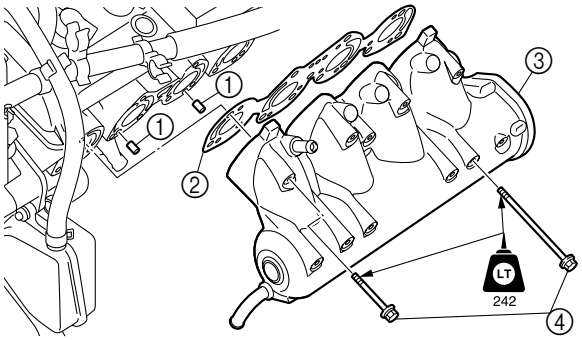

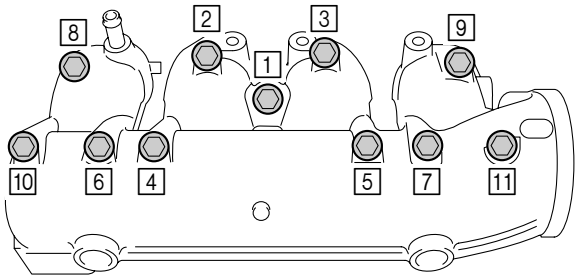

Exhaust manifold bolt ④: 1st: 22 N·m (2.2 kgf·m, 16.2 ft·lb) 2nd: 35 N·m (3.5 kgf·m, 25.8 ft·lb)

3. Connect the cooling water hose ⑤.

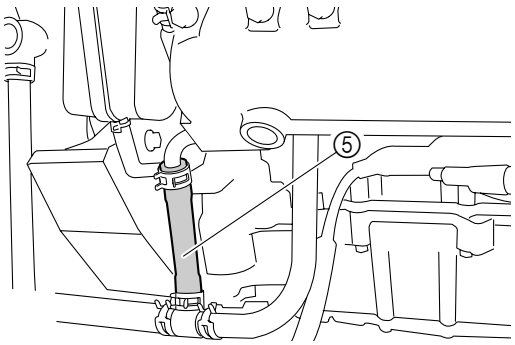

4. Install the cooling water hose ⑥.

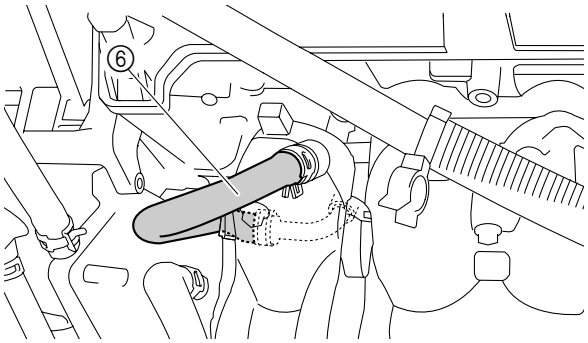

Exhaust pipe installation

1. Install the dowel pins ①, a new gasket ②, and exhaust pipe 1 ③, and then tighten the bolts ④ to the specified torques in 2 stages. ***NOTICE:*** **Do not reuse a gasket, always replace it with a new one.**

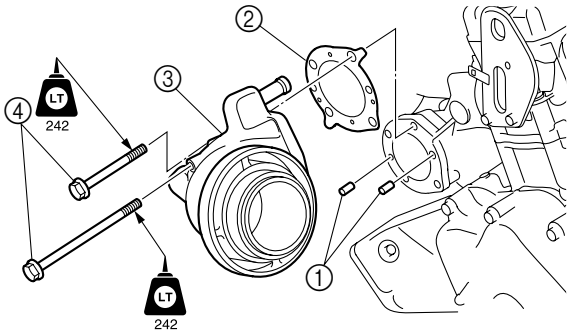

Exhaust pipe 1 bolt ④: 1st: 22 N·m (2.2 kgf·m, 16.2 ft·lb) 2nd: 35 N·m (3.5 kgf·m, 25.8 ft·lb)

2. Install the outer exhaust joint ⑤ in the position shown.

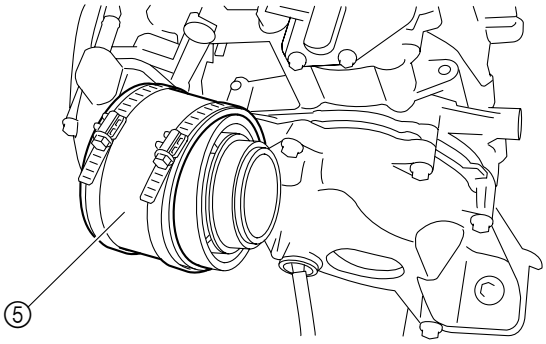

3. Install the inner exhaust joint ⑥.

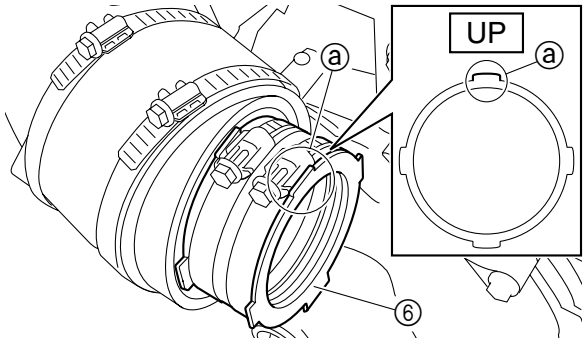

TIP:

Point 1 tab ⓐ on the inner exhaust joint ⑥ up.

4. Insert the end of exhaust pipe 2 ⑦ into the inner exhaust joint ⑥, install exhaust pipe 2 ⑦, and then tighten the bolts ⑧ and ⑨ to the specified torques in 3 stages and in the order 1, 2, and so on.

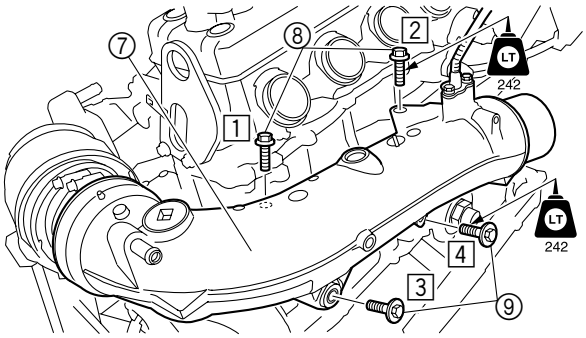

Exhaust pipe 2 bolts ⑧ and ⑨: 1st: 2 N·m (0.2 kgf·m, 1.5 ft·lb) 2nd: 15 N·m (1.5 kgf·m, 11.1 ft·lb) 3rd: 40 N·m (4.0 kgf·m, 29.5 ft·lb)

5. Tighten the clamps ⑩ to the specified torque.

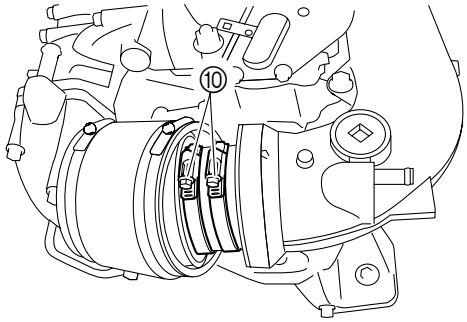

Inner exhaust joint clamp ⑩: 3 N·m (0.3 kgf·m, 2.2 ft·lb)

6. Slide the outer exhaust joint ⑤ toward exhaust pipe 2 ⑦, and then tighten the clamps ⑪ to the specified torque.

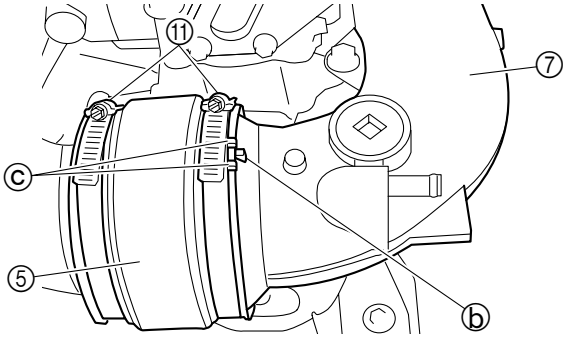

Outer exhaust joint clamp ⑪: 3 N·m (0.3 kgf·m, 2.2 ft·lb)

TIP:

Align the protrusion ⓑ on exhaust pipe 2 ⑦ between the protrusions ⓒ on the outer exhaust joint ⑤.

7. Connect the cooling water hose ⑫.

8. Install the plastic tie ⑬.

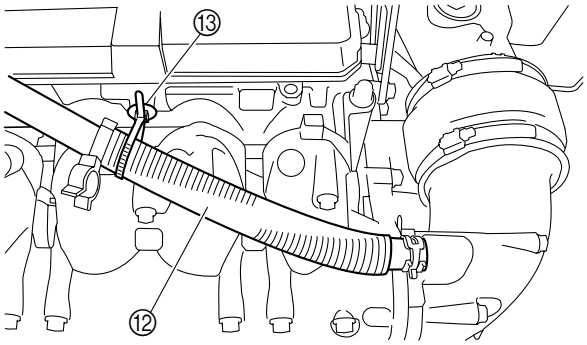

Cooling water hose

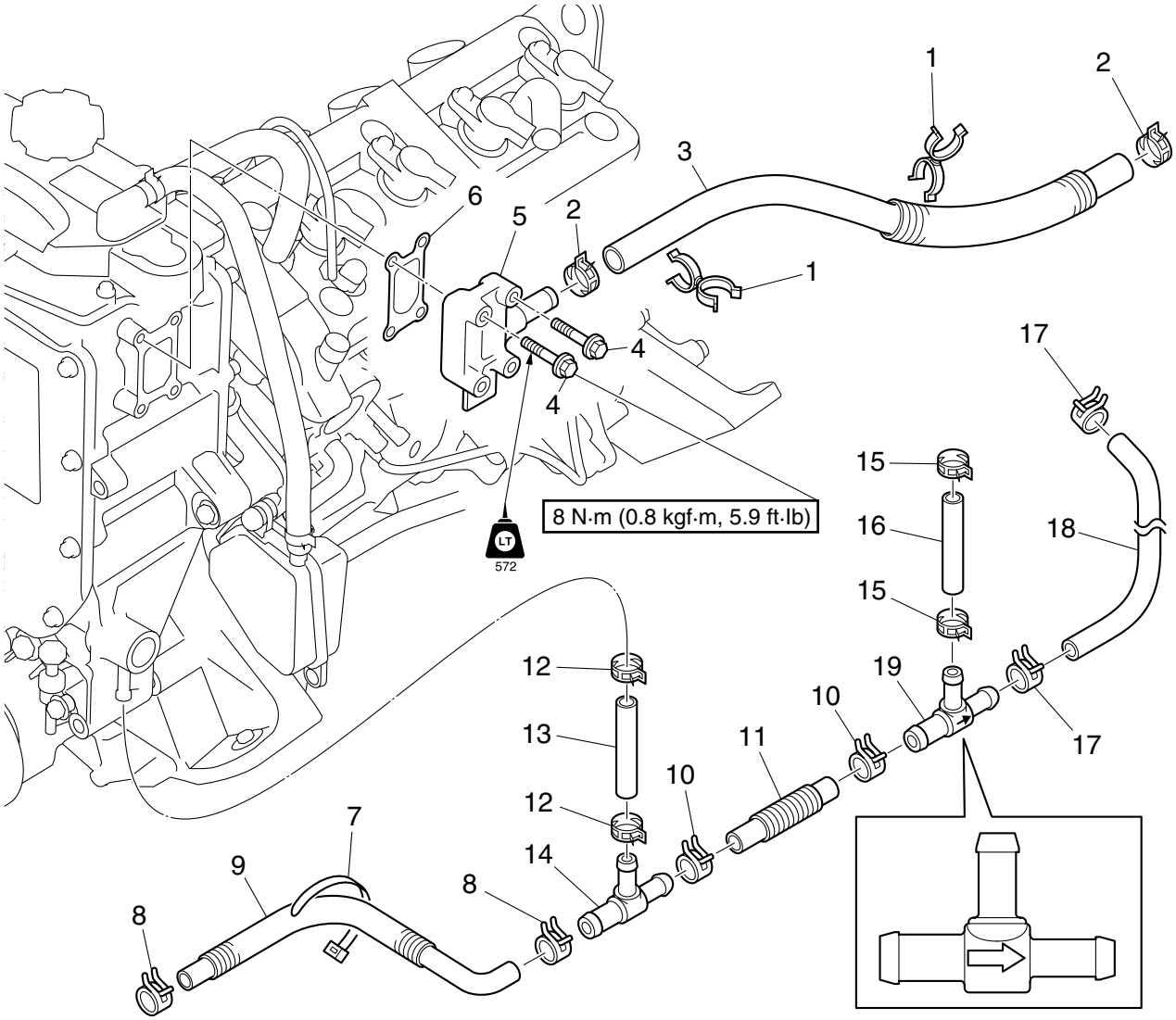

No.	Part name	Q'ty	Remarks
1	Holder	2	
2	Clamp	2	
3	Corrugated tube/cooling water hose	1/1	
4	Bolt	4	M6 × 35 mm
5	Water jacket	1	
6	Gasket	1	**Not reusable**
7	Band	1	**Not reusable**
8	Clamp	2	
9	Corrugated tube/cooling water hose	1/1	
10	Clamp	2	
11	Corrugated tube/cooling water hose	1/1	
12	Clamp	2	
13	Cooling water hose	1	
14	Joint	1	
15	Clamp	2	
16	Cooling water hose	1	

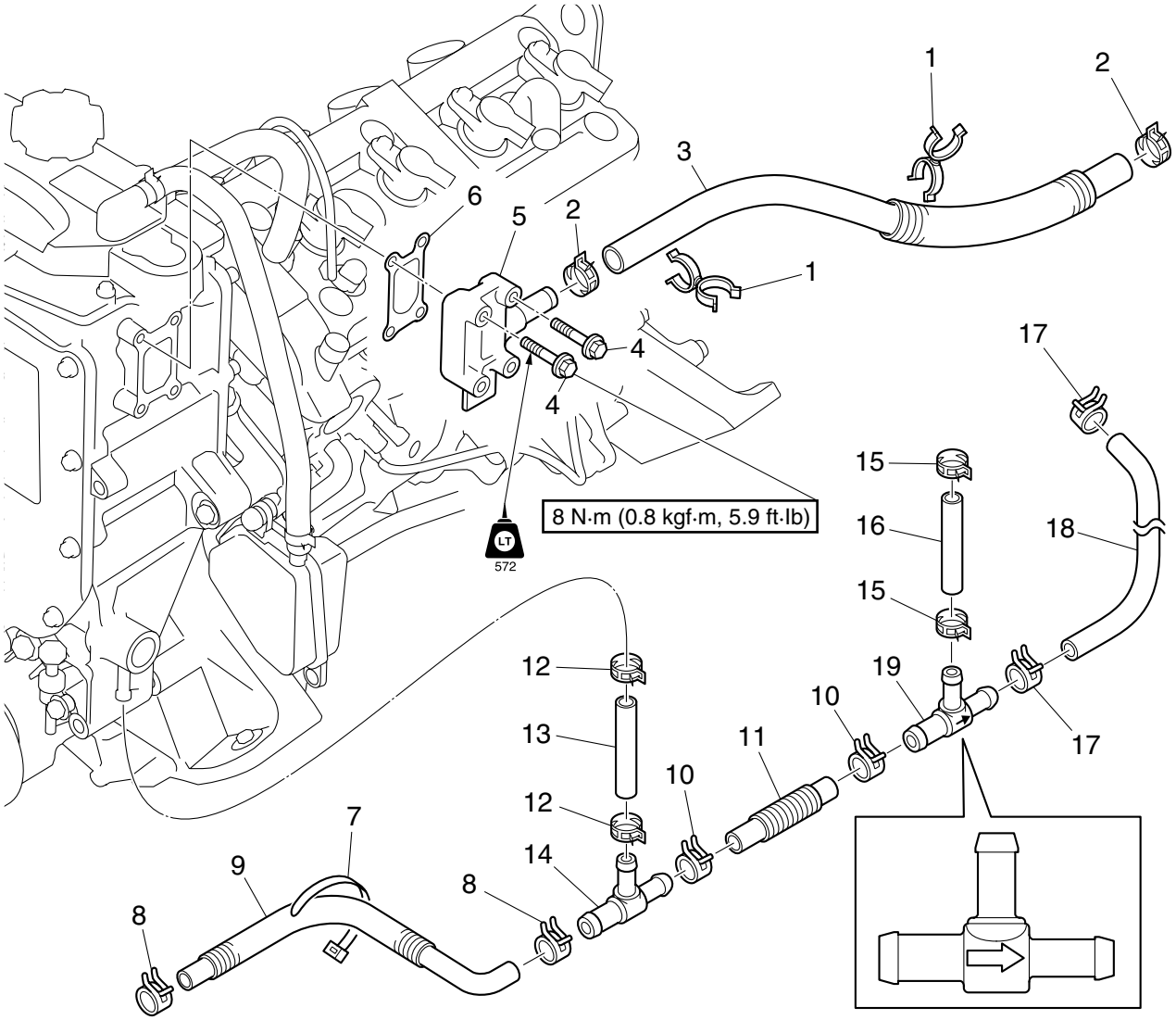

No.	Part name	Q'ty	Remarks
17	Clamp	2	
18	Cooling water hose	1	
19	Joint	1	

Oil tank assy.

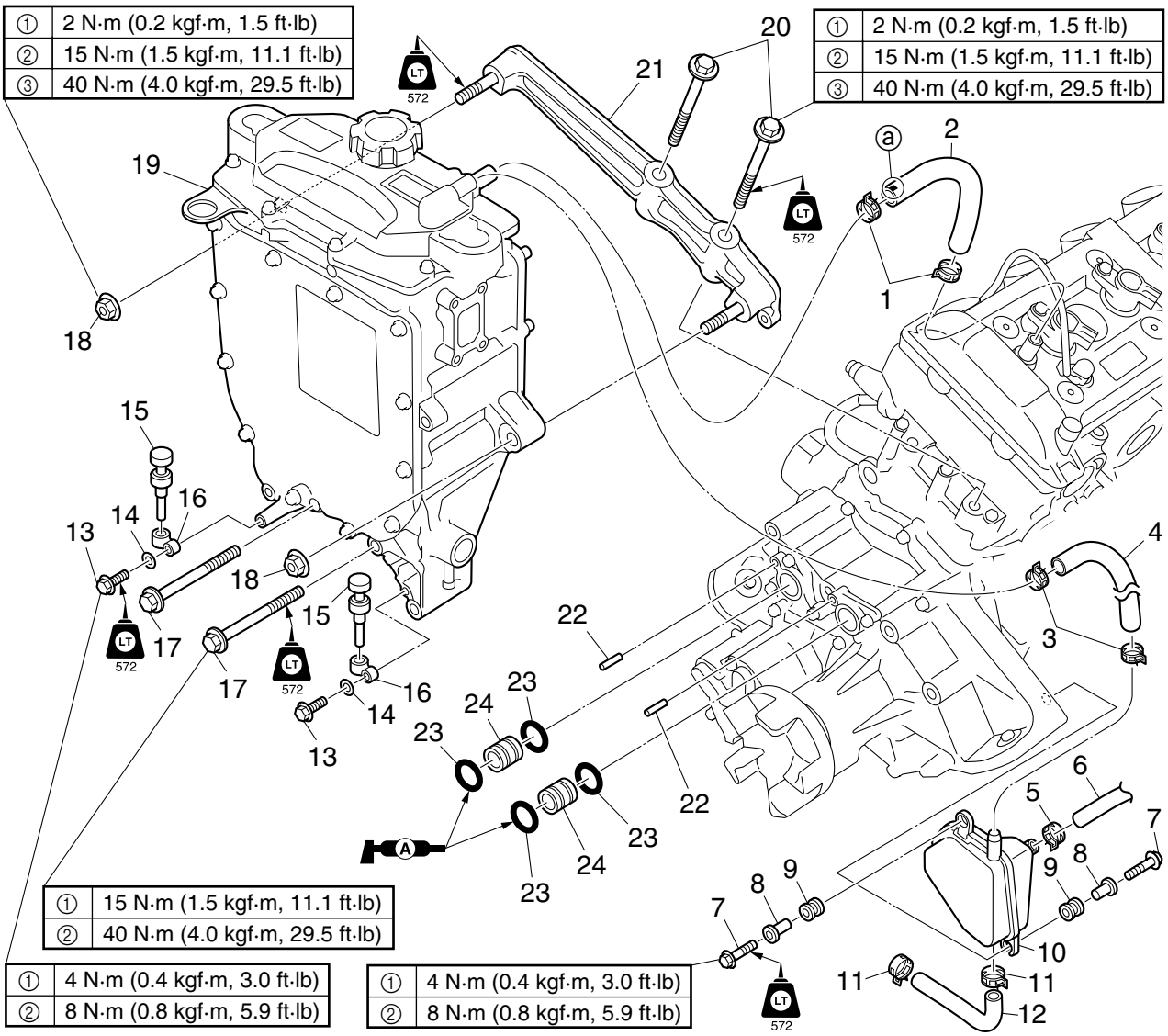

No.	Part name	Q'ty	Remarks
	Engine oil		See "Engine oil change" (3-10).
1	Clamp	2	
2	Breather hose	1	ⓐ White paint mark
3	Clamp	2	
4	Breather hose	1	
5	Clamp	1	
6	Breather hose	1	
7	Bolt	2	M6 × 30 mm
8	Collar	2	
9	Grommet	2	
10	Oil separator	1	
11	Clamp	2	
12	Breather hose	1	
13	Bolt	2	M6 × 20 mm
14	Washer	2	
15	Grommet	2	

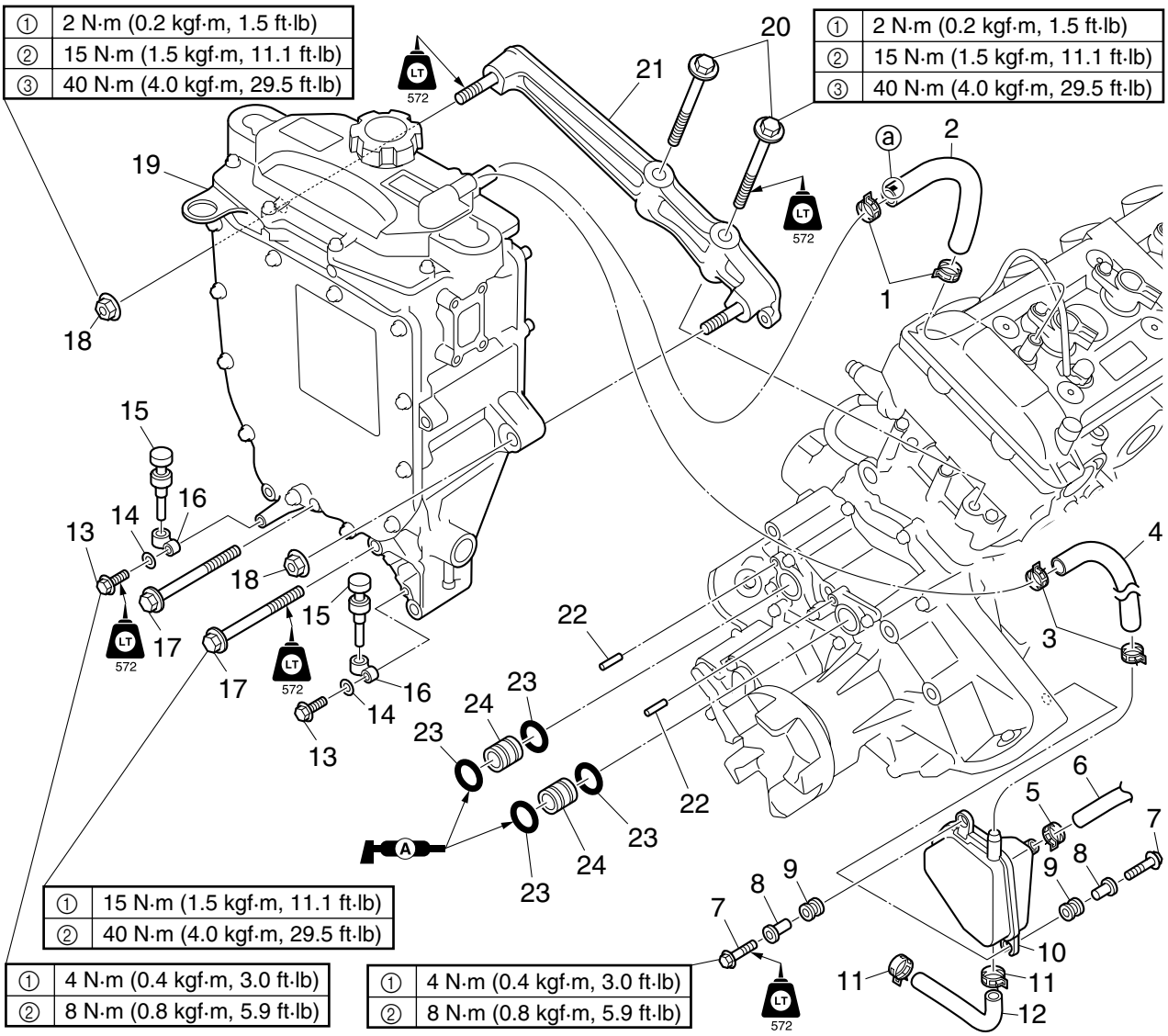

No.	Part name	Q'ty	Remarks
16	Bracket	2	
17	Bolt	5	M10 × 85 mm
18	Nut	2	
19	Oil tank assy.	1	
20	Bolt	2	M10 × 70 mm
21	Oil tank stay	1	
22	Dowel pin	2	
23	O-ring	4	**Not reusable**
24	Connector	2	

Oil tank

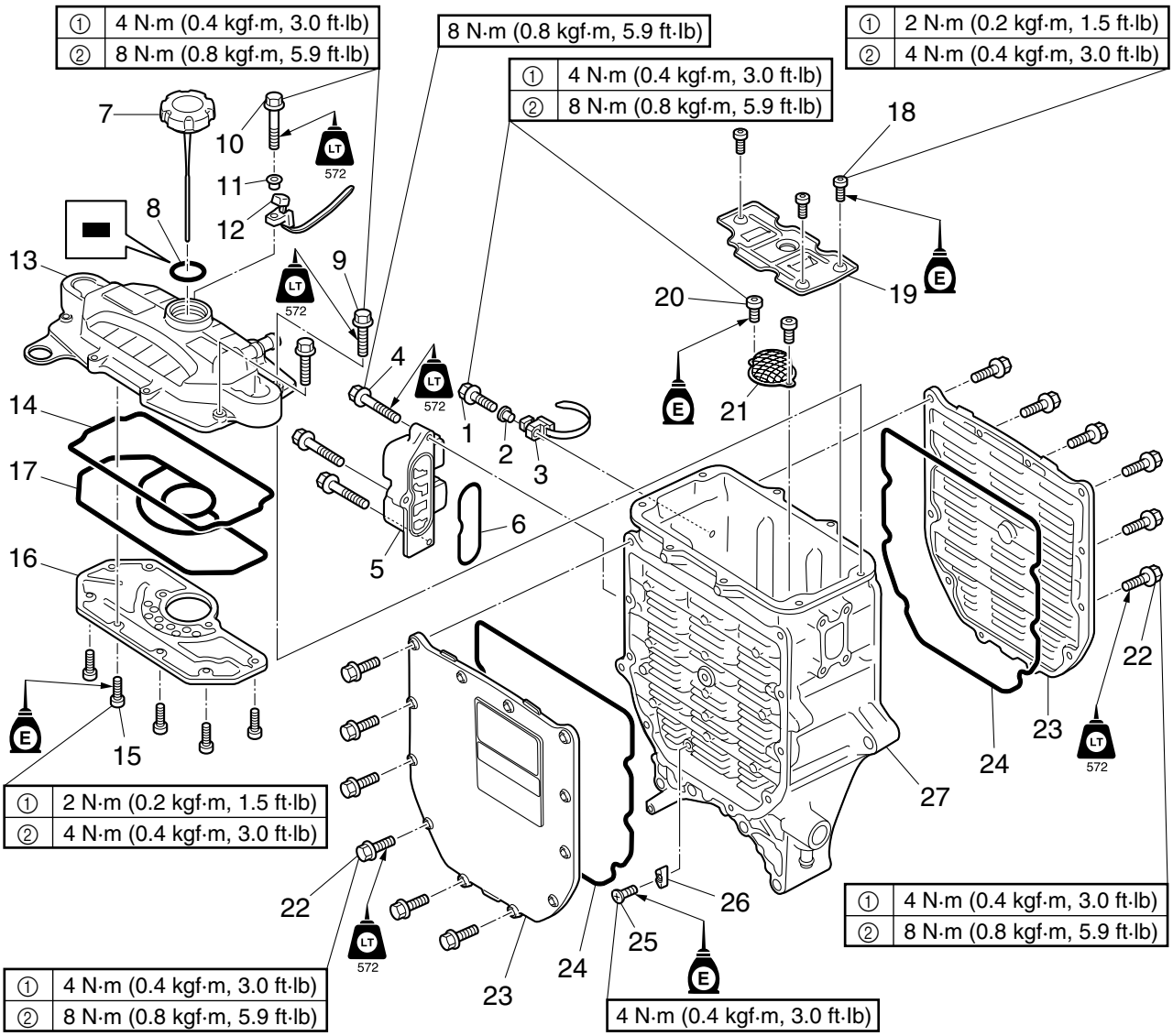

No.	Part name	Q'ty	Remarks
1	Bolt	1	M6 × 20 mm
2	Collar	1	
3	Holder	1	
4	Bolt	3	M6 × 35 mm
5	Earth plate	1	
6	O-ring	1	**Not reusable**
7	Oil tank filler cap	1	
8	O-ring	1	
9	Bolt	7	M6 × 25 mm
10	Bolt	1	M6 × 35 mm
11	Collar	1	
12	Holder	1	
13	Oil tank cover	1	
14	Gasket	1	**Not reusable**
15	Bolt	9	M5 × 16 mm
16	Oil breather plate	1	

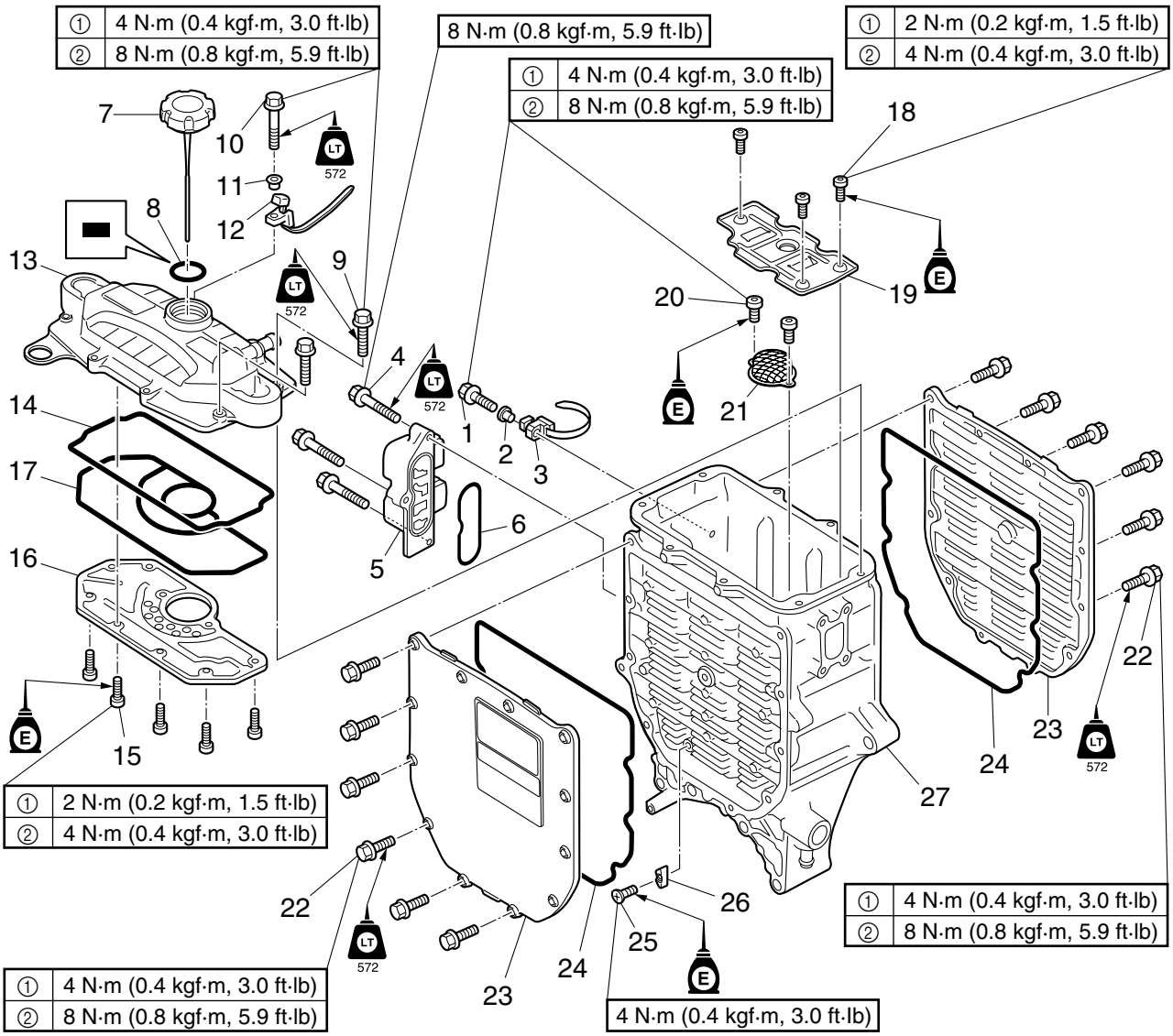

No.	Part name	Q'ty	Remarks
17	Gasket	1	**Not reusable**
18	Bolt	3	M5 × 14 mm
19	Baffle plate	1	
20	Bolt	2	M6 × 14 mm
21	Oil strainer	1	
22	Bolt	24	M6 × 20 mm
23	Oil cooler cover	2	
24	Gasket	2	**Not reusable**
25	Screw	1	ø4 × 12 mm
26	Anode	1	
27	Oil tank	1	

Oil tank assy. removal

1. Remove the cooling water hose ①, water jacket ②, and gasket ③.

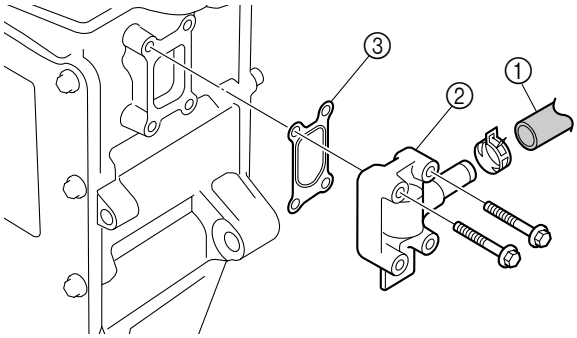

2. Remove the band ④.

3. Remove the cooling water hoses ⑤ and joints ⑥.

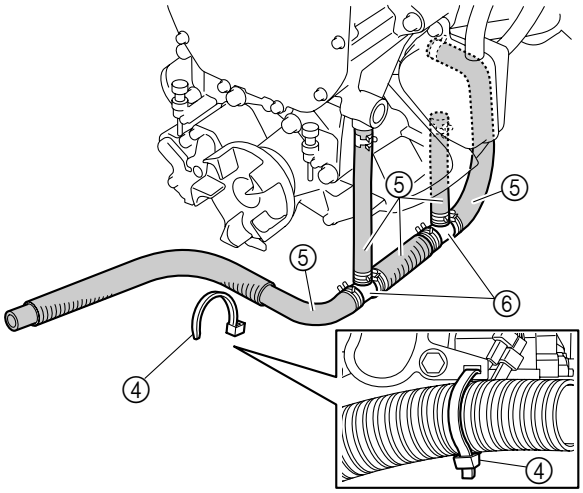

4. Remove the breather hose (oil tank to cylinder head cover) ⑦.

5. Remove the breather hose (oil separator to oil tank) ⑧.

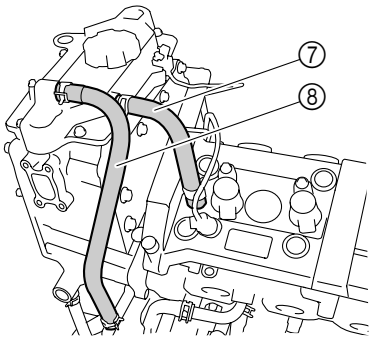

6. Remove the breather hose (oil separator to air filter case) ⑨.

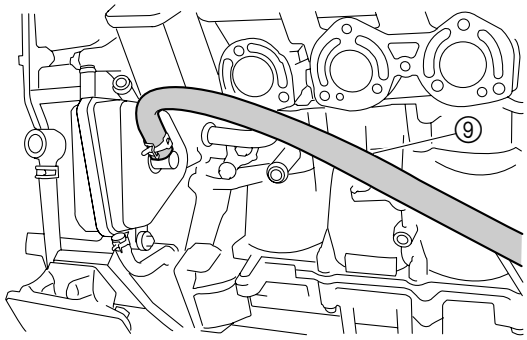

7. Remove the collars ⑩, grommets ⑪, oil separator ⑫, and breather hose ⑬.

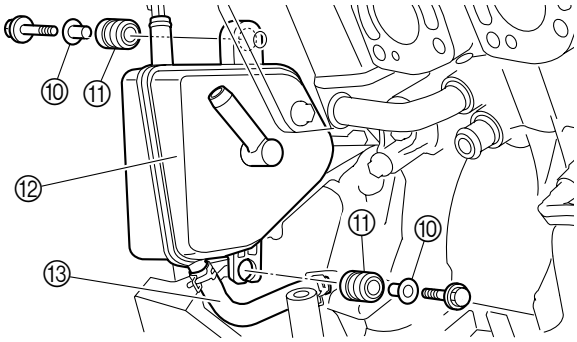

8. Remove the grommets ⑭ and brackets ⑮.

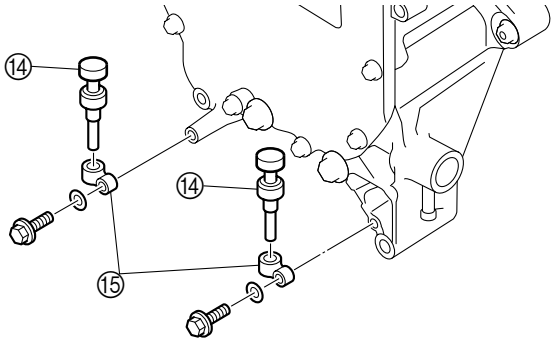

9. Loosen the bolts in the order [1], [2], and so on, and then remove the oil tank assy. ⑯ and oil tank stay ⑰.

5

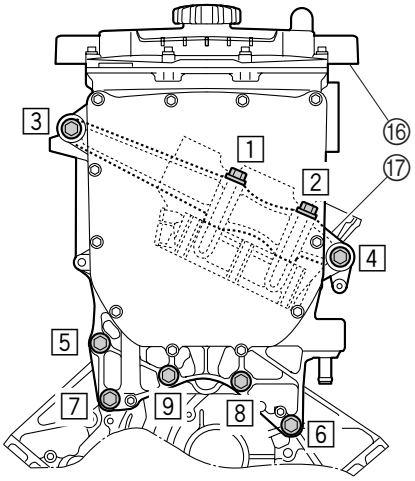

10. Remove the dowel pins ⑱, connectors ⑲, and O-rings ⑳.

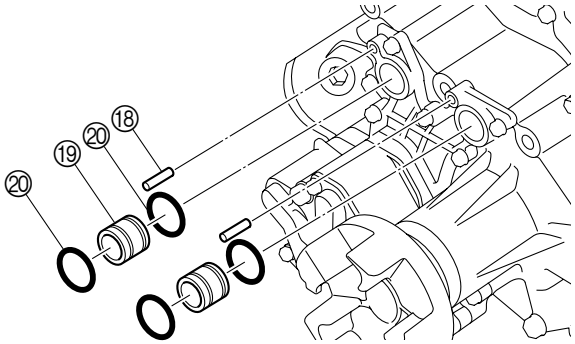

Oil tank assy. check

1. Install a new gasket ① and the water jacket ②, and then tighten the bolts ③ to the specified torque.

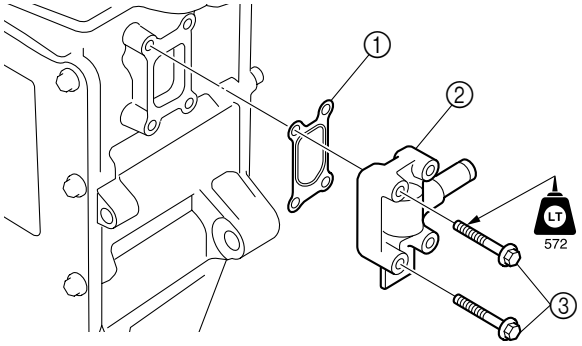

Water jacket bolt ③: 8 N·m (0.8 kgf·m, 5.9 ft·lb)

2. Connect the special service tool ④ to the inlet of the oil tank assy. water passage ⓐ. Block the oil tank assy. outlet ⓑ using a rubber plug ⑤.

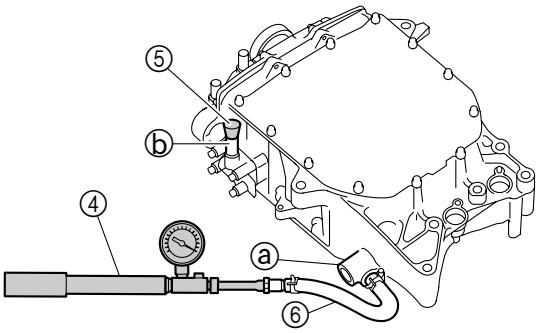

Leakage tester ④: 90890-06840

TIP:

When checking the oil tank assy., connect the hose ⑥ to the oil tank assy.

3. Apply the specified positive pressure and check that the pressure is maintained.

Specified positive pressure (water passage): 100 kPa (1.0 kgf/cm^2, 14.2 psi)

4. If the specified pressure cannot be maintained, replace the oil cooler cover gaskets.

Oil tank disassembly

1. Remove the collar ① and holder ②.

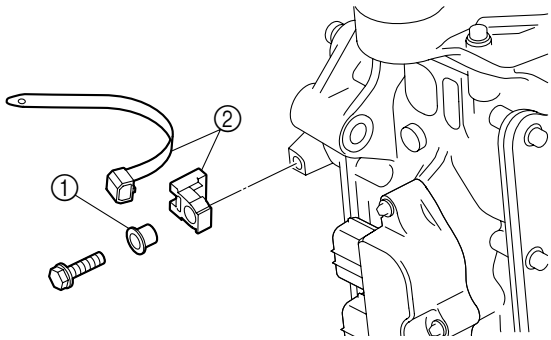

2. Remove the earth plate ③ and O-ring ④.

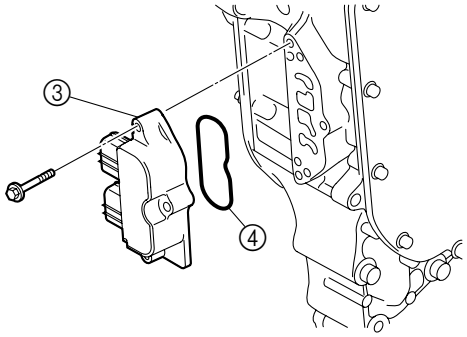

3. Remove the oil tank filler cap ⑤ and O-ring ⑥.

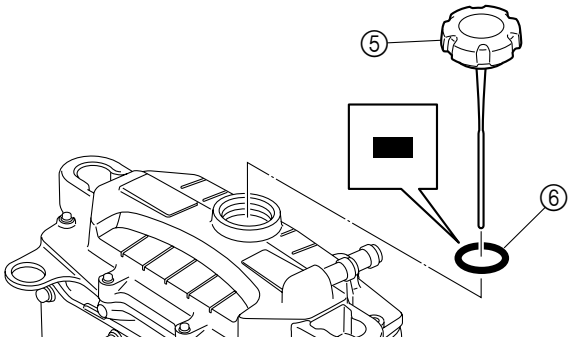

4. Loosen the bolts in the order [1], [2], and so on, and then remove the oil tank cover ⑦ and gasket ⑧.

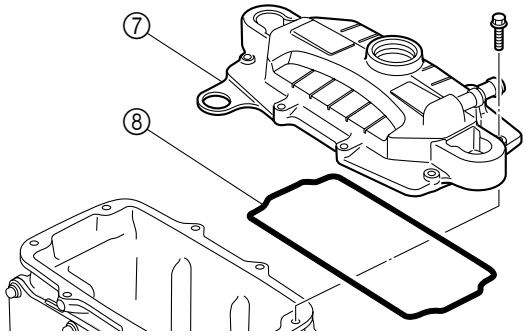

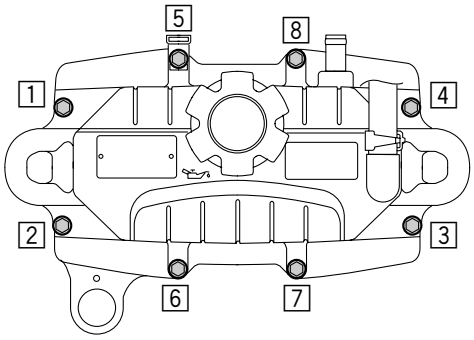

5. Loosen the bolts in the order [1], [2], and so on, and then remove the oil breather plate ⑨ and gasket ⑩.

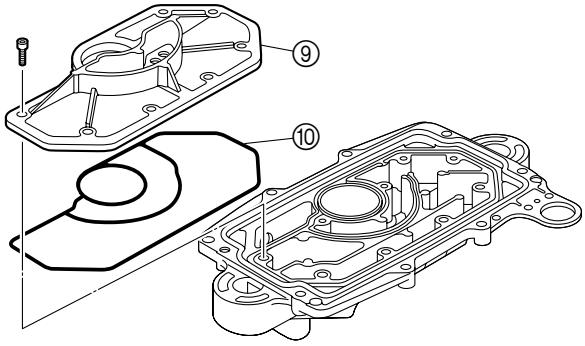

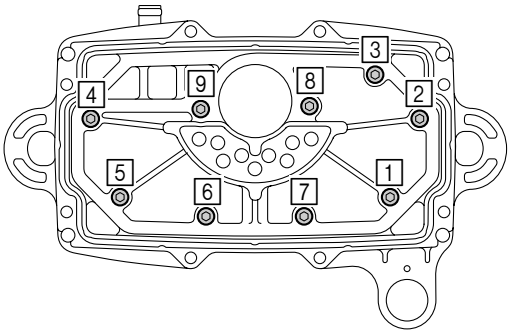

6. Remove the baffle plate ⑪.

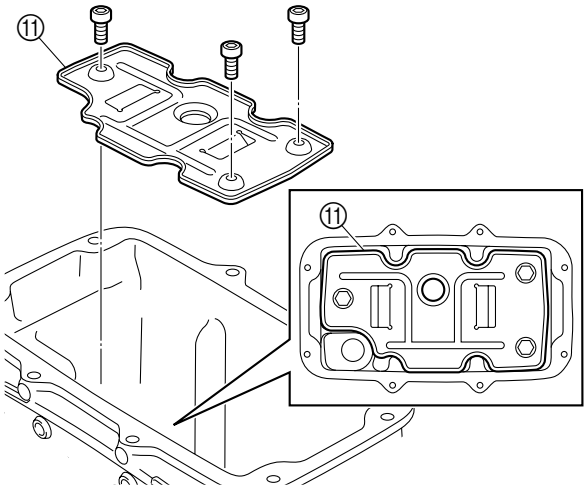

7. Remove the oil strainer ⑫.

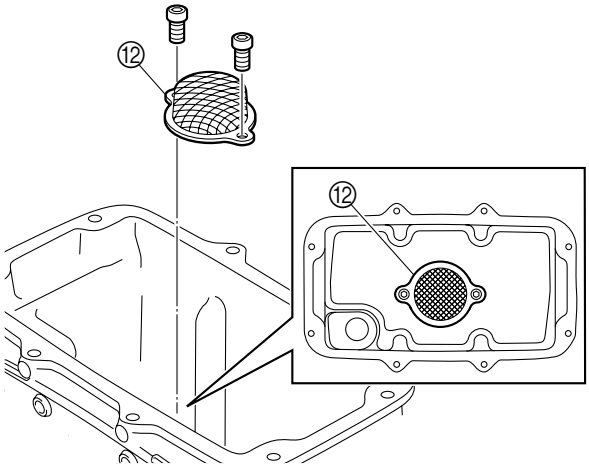

8. Loosen the bolts in the order [1], [2], and so on, and then remove the oil cooler covers ⑬ and gaskets ⑭.

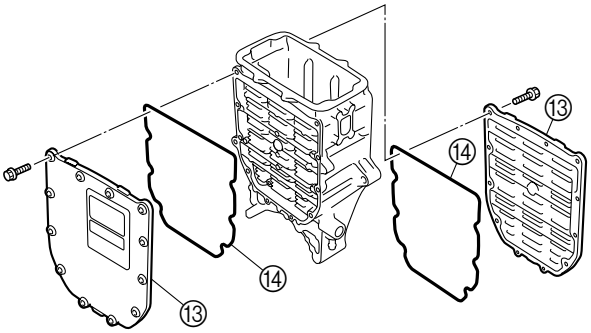

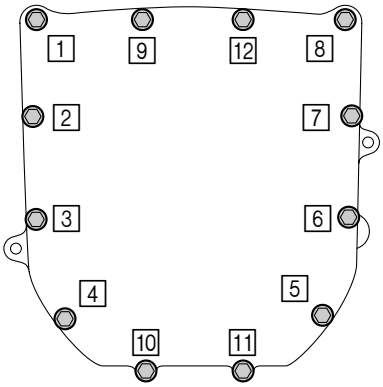

TIP:
Loosen the oil cooler cover bolts for both covers in the same order.

9. Remove the anode ⑮.

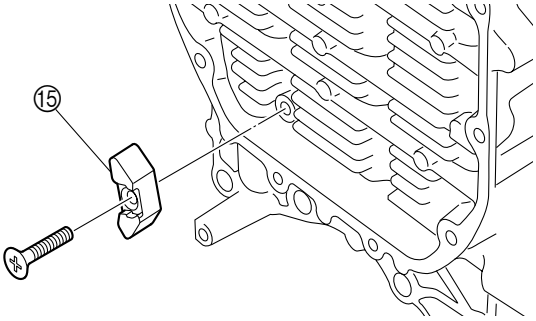

Cooling water hose and joint check

1. Check the cooling water hoses. Replace if cracked or damaged.
2. Check the joints. Replace if cracked or damaged.

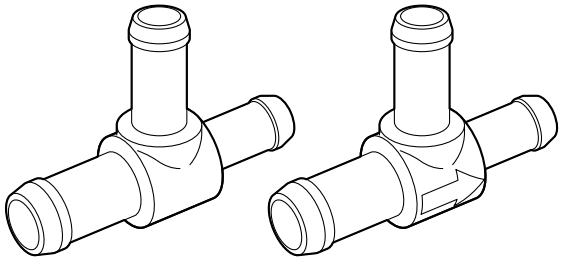

Oil separator and breather hose check

1. Check the oil separator. Replace if cracked or damaged.

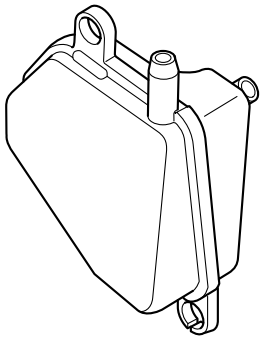

2. Check the breather hoses. Replace if cracked or damaged.

Oil tank filler cap and O-ring check

1. Check the oil tank filler cap ① and O-ring ②. Replace if cracked or damaged.

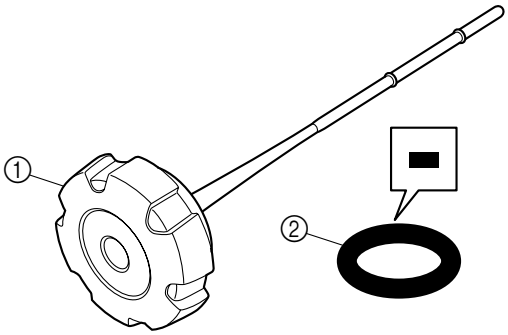

Oil tank and oil cooler cover check

1. Check the cooling water passages ⓐ of the oil tank ① and oil cooler covers ②. Clean if there are contaminants or scales. Replace if corroded or cracked.

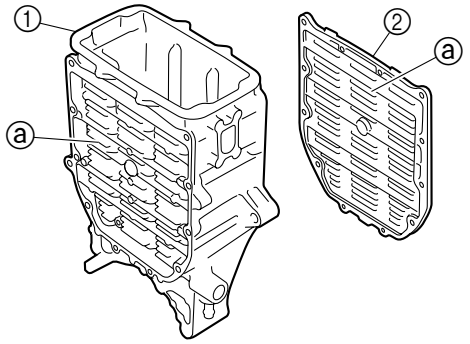

Oil strainer check

1. Check the oil strainer. Clean if there are clogs or contaminants. Replace if cracked or damaged.

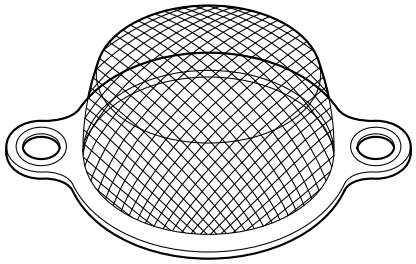

Oil tank cover check

1. Check the oil tank cover. Replace if cracked or damaged.

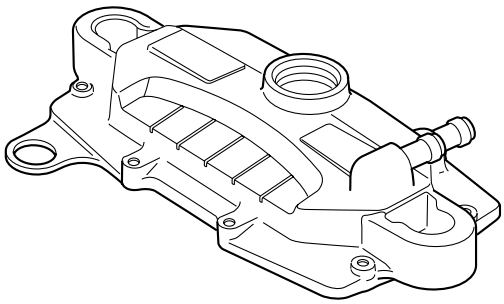

Oil breather plate and baffle plate check

1. Check the oil breather plate ① and baffle plate ②. Clean if there are clogs or contaminants. Replace if cracked or damaged.

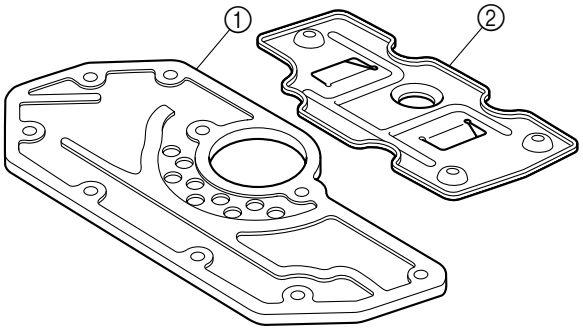

Anode check

1. Check the anode. Replace if eroded. Clean if there is grease, oil, or scales. ***NOTICE:*** **Do not apply grease, oil, or paint to the anode.**

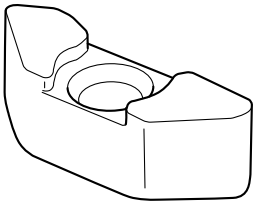

Oil tank assembly

NOTICE

Do not reuse a gasket, always replace it with a new one.

1. Install the anode ①, and then tighten the screw ② to the specified torque. ***NOTICE:*** **Do not apply grease, oil, or paint to the anode.**

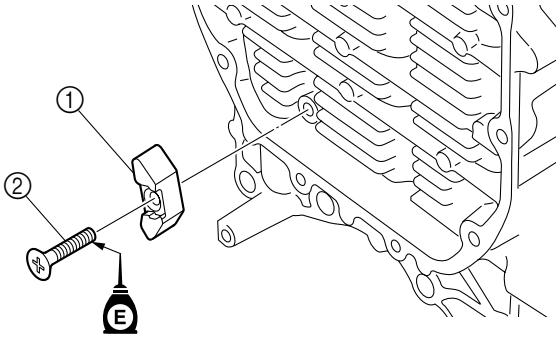

Anode screw ②: 4 N·m (0.4 kgf·m, 3.0 ft·lb)

5

2. Install new gaskets ③ and the oil cooler covers ④, and then tighten the bolts ⑤ to the specified torques in 2 stages and in the order [1], [2], and so on.

TIP:

- Install the oil cooler cover that does not have a warning label on the side of the oil cooler that is facing toward the engine.
- Tighten the oil cooler cover bolts for both covers to the same torques and in the same order.

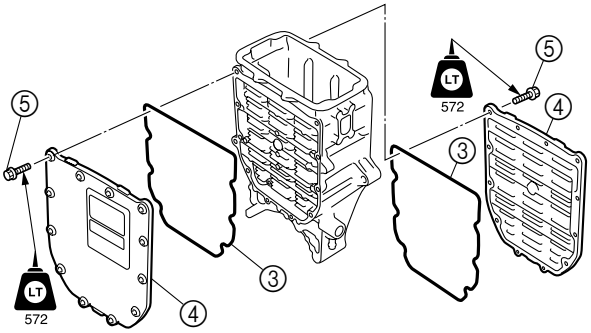

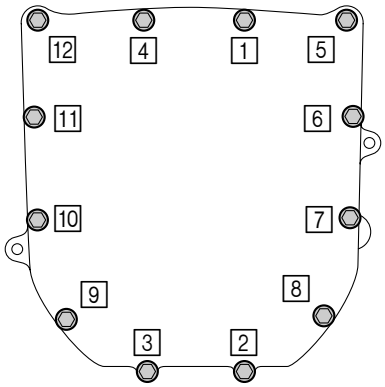

Oil cooler cover bolt ⑤:
1st: 4 N·m (0.4 kgf·m, 3.0 ft·lb)
2nd: 8 N·m (0.8 kgf·m, 5.9 ft·lb)

3. Install the oil strainer ⑥, and then tighten the bolts ⑦ to the specified torques in 2 stages.

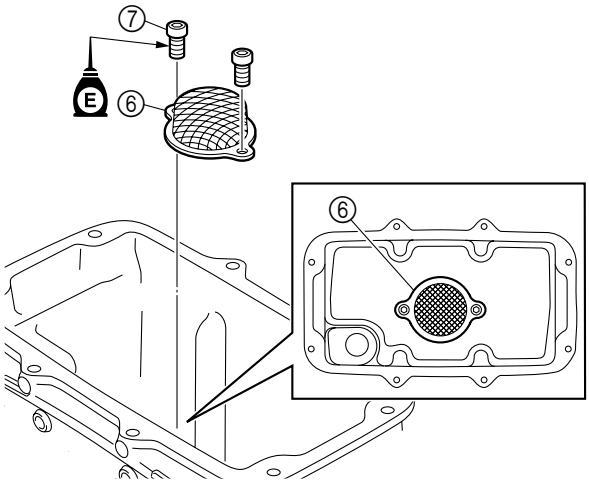

Oil strainer bolt ⑦:
1st: 4 N·m (0.4 kgf·m, 3.0 ft·lb)
2nd: 8 N·m (0.8 kgf·m, 5.9 ft·lb)

4. Install the baffle plate ⑧, and then tighten the bolts ⑨ to the specified torques in 2 stages.

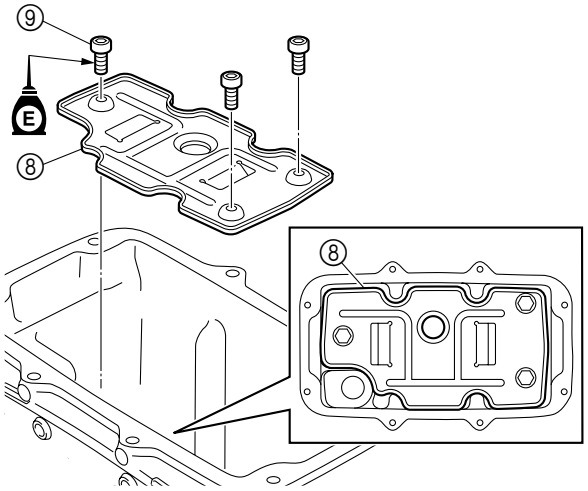

Baffle plate bolt ⑨:
1st: 2 N·m (0.2 kgf·m, 1.5 ft·lb)
2nd: 4 N·m (0.4 kgf·m, 3.0 ft·lb)

5. Install a new gasket ⑩ and the oil breather plate ⑪, and then tighten the bolts ⑫ to the specified torques in 2 stages and in the order [1], [2], and so on.

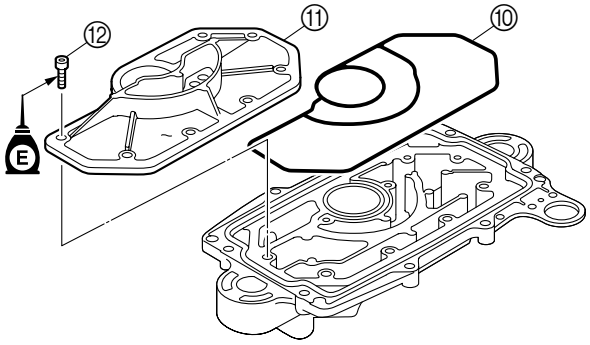

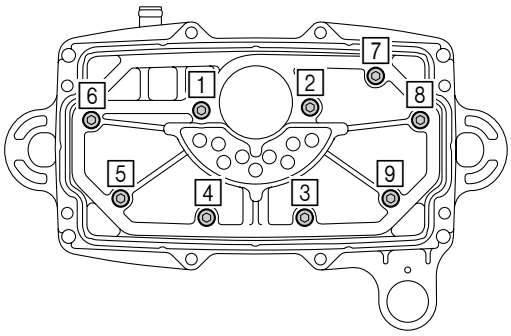

Oil breather plate bolt ⑫: 1st: 2 N·m (0.2 kgf·m, 1.5 ft·lb) 2nd: 4 N·m (0.4 kgf·m, 3.0 ft·lb)

6. Install a new gasket ⑬ and the oil tank cover ⑭, and then tighten the bolts ⑮ to the specified torques in 2 stages and in the order [1], [2], and so on.

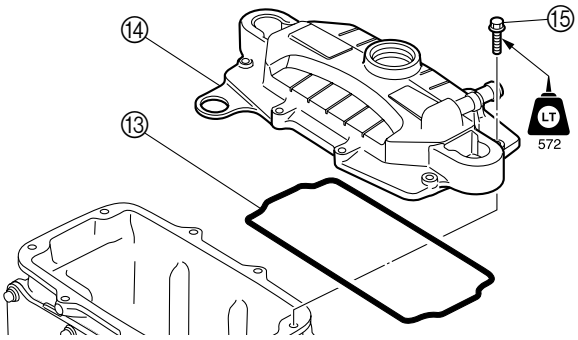

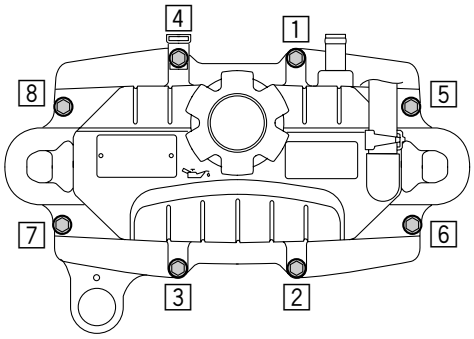

Oil tank cover bolt ⑮: 1st: 4 N·m (0.4 kgf·m, 3.0 ft·lb) 2nd: 8 N·m (0.8 kgf·m, 5.9 ft·lb)

7. Install the O-ring ⑯ and oil tank filter cap ⑰.

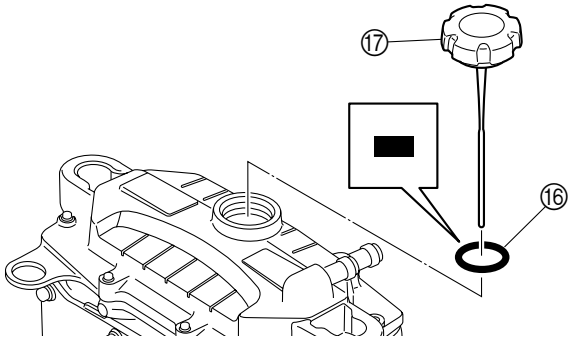

8. Install a new O-ring ⑱ and the earth plate ⑲, and then tighten the bolts ⑳ to the specified torque.

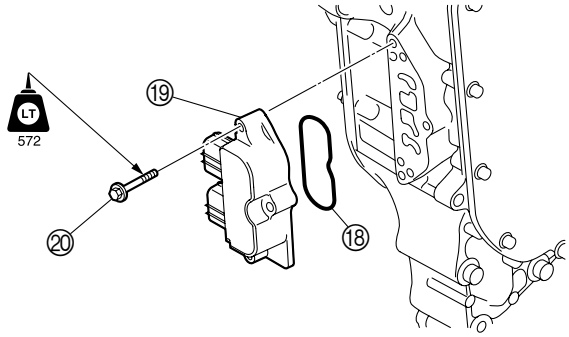

Earth plate bolt ⑳: 8 N·m (0.8 kgf·m, 5.9 ft·lb)

9. Install the collar ㉑ and holder ㉒, and then tighten the bolt ㉓ to the specified torques in 2 stages.

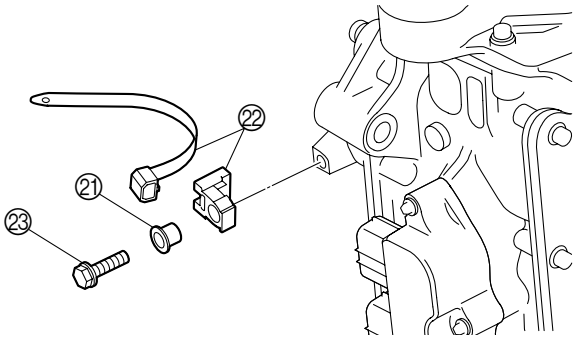

Holder bolt ㉓: 4 N·m (0.4 kgf·m, 3.0 ft·lb) 8 N·m (0.8 kgf·m, 5.9 ft·lb)

Oil tank assy. installation

NOTICE

Do not reuse an O-ring, always replace it with a new one.

1. Fill the oil pump assy. with engine oil through the scavenge and feed ports. ***NOTICE:*** **Make sure to fill the oil pump assy. with engine oil through the scavenge and feed ports.**

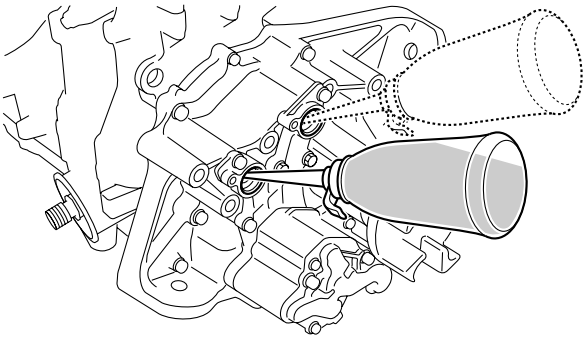

Recommended engine oil: API: SE, SF, SG, SH, SJ, or SL SAE: 10W-30, 10W-40, 20W-40, 20W-50

2. Install new O-rings ①, the connectors ②, and the dowel pins ③.

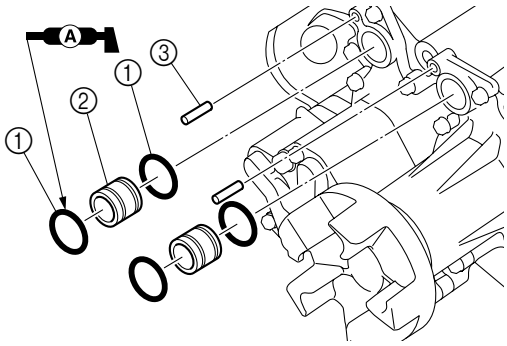

3. Install the oil tank stay ④ and oil tank assy. ⑤, and then tighten the bolts ⑥ and ⑦ and nuts ⑧ to the specified torques in 2 or 3 stages and in the order [1], [2], and so on.

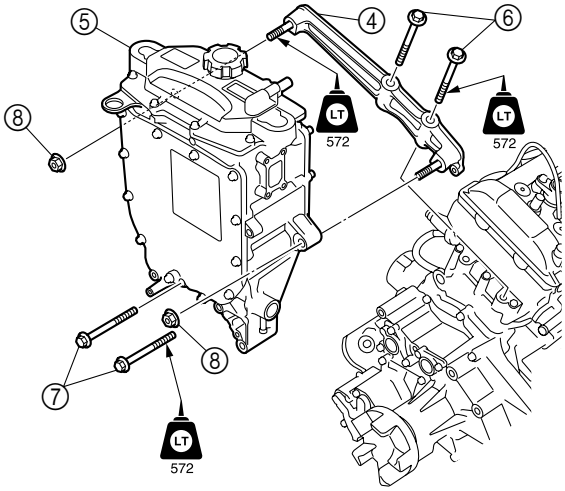

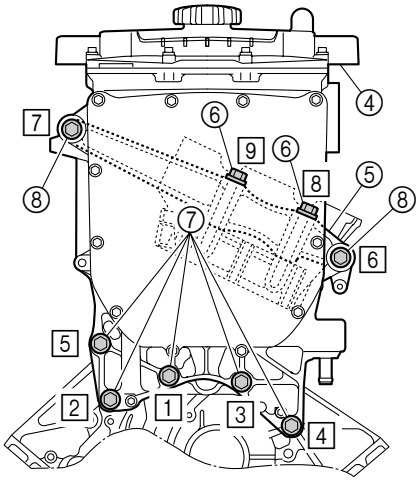

Oil tank bolt ⑦: 1st: 15 N·m (1.5 kgf·m, 11.1 ft·lb) 2nd: 40 N·m (4.0 kgf·m, 29.5 ft·lb) Oil tank stay bolt ⑥ and nut ⑧: 1st: 2 N·m (0.2 kgf·m, 1.5 ft·lb) 2nd: 15 N·m (1.5 kgf·m, 11.1 ft·lb) 3rd: 40 N·m (4.0 kgf·m, 29.5 ft·lb)

4. Install the brackets ⑨ and grommets ⑩, and then tighten the bolts ⑪ to the specified torques in 2 stages.

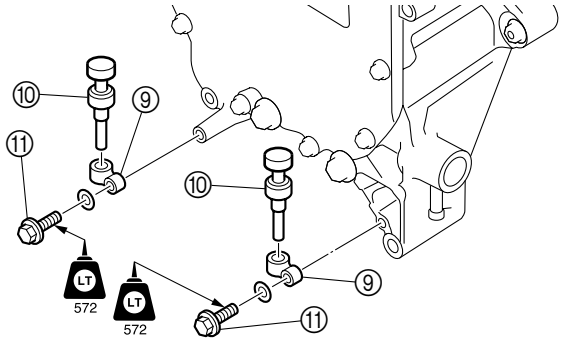

Bracket bolt ⑪: 4 N·m (0.4 kgf·m, 3.0 ft·lb) 8 N·m (0.8 kgf·m, 5.9 ft·lb)

5. Install the breather hose ⑫, oil separator ⑬, grommets ⑭, and collars ⑮, and then tighten the bolts ⑯ to the specified torques in 2 stages.

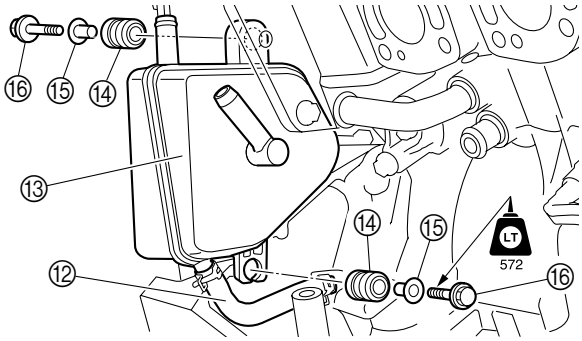

Oil separator bolt ⑯: 1st: 4 N·m (0.4 kgf·m, 3.0 ft·lb) 2nd: 8 N·m (0.8 kgf·m, 5.9 ft·lb)

6. Install the breather hose (oil separator to air filter case) ⑰.

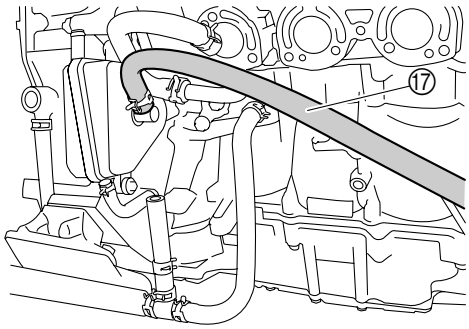

7. Install the breather hose (oil separator to oil tank) ⑱.

8. Install the breather hose (oil tank to cylinder head cover) ⑲.

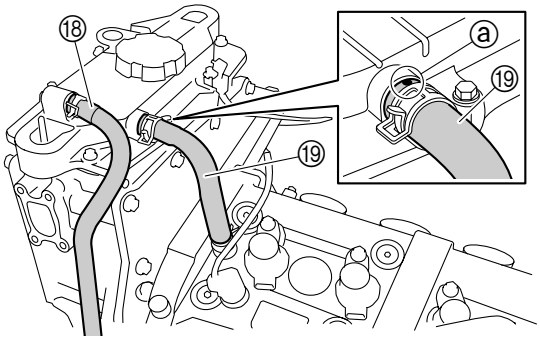

TIP:

Make sure that the white paint mark ⓐ on the breather hose faces up.

9. Install the cooling water hoses ⑳ and joints ㉑.

10. Install a new band ㉒.

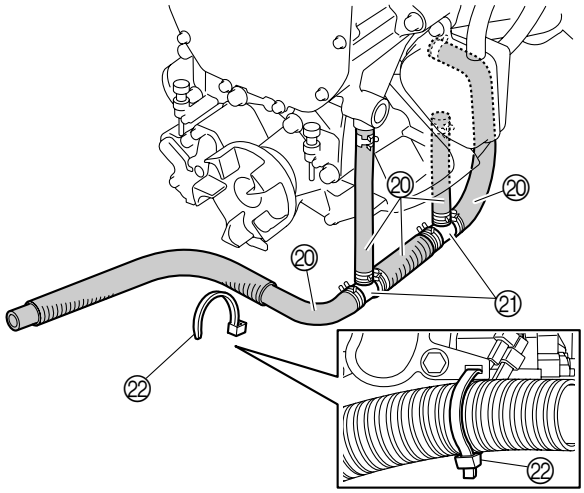

11. Install a new gasket ㉓ and the water jacket ㉔, and then tighten the bolts ㉕ to the specified torque.

12. Install the cooling water hose ㉖.

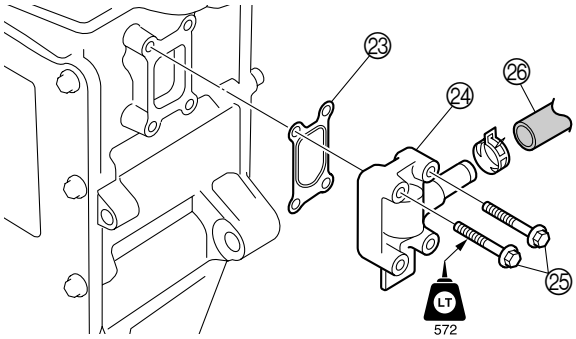

Water jacket bolt ㉕: 8 N·m (0.8 kgf·m, 5.9 ft·lb)

5

Oil pump assy.

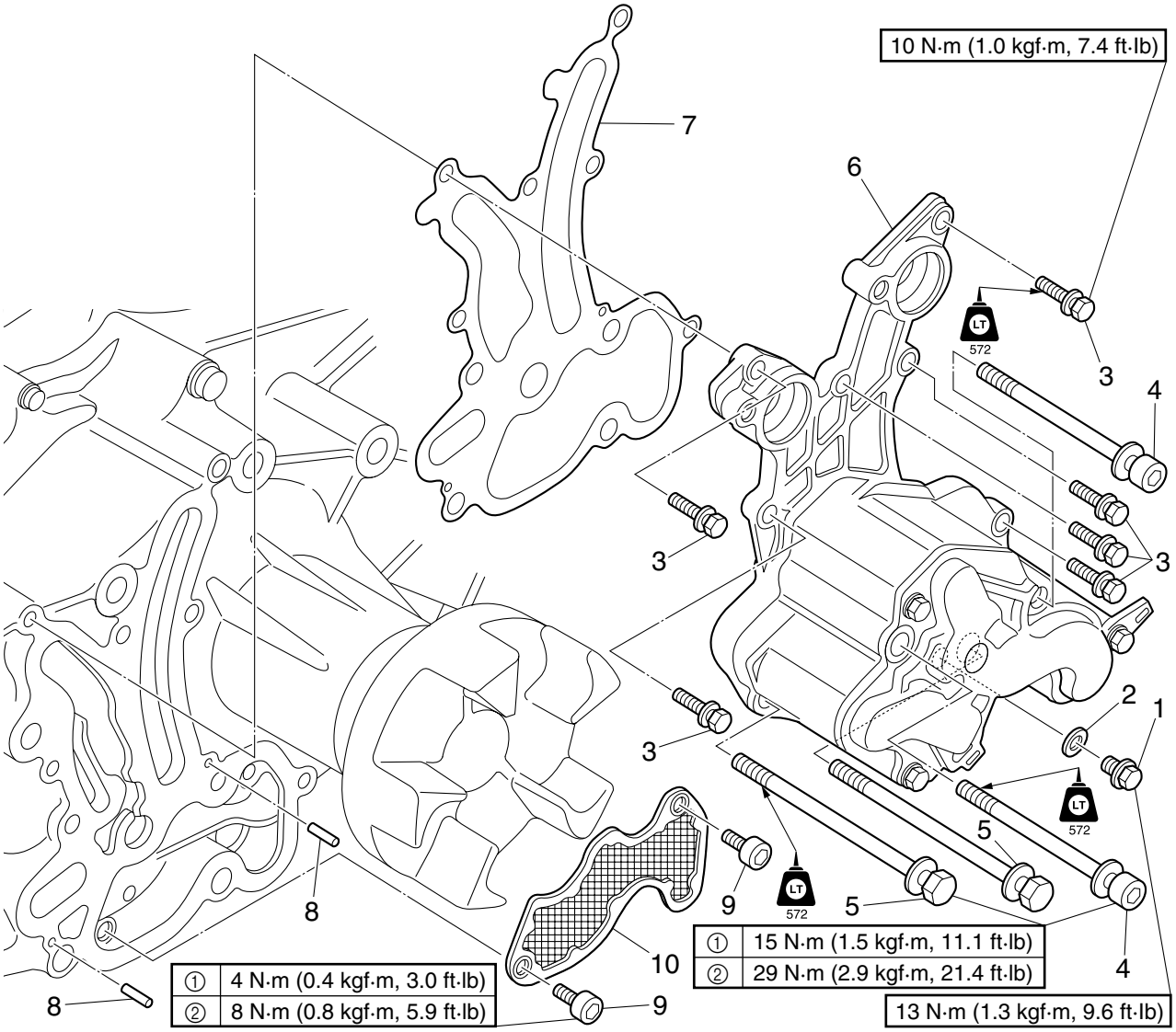

No.	Part name	Q'ty	Remarks
1	Drain plug	1	M8 × 12 mm
2	Washer	1	
3	Bolt	6	M6 × 25 mm
4	Bolt	2	M8 × 95 mm
5	Bolt	2	M8 × 112 mm
6	Oil pump assy.	1	
7	Gasket	1	**Not reusable**
8	Dowel pin	2	
9	Bolt	2	M6 × 16 mm
10	Oil strainer	1	

Oil pump assy. removal

1. Place a container under the oil pump assy.

2. Remove the drain plug ① and washer ②, to drain the engine oil.

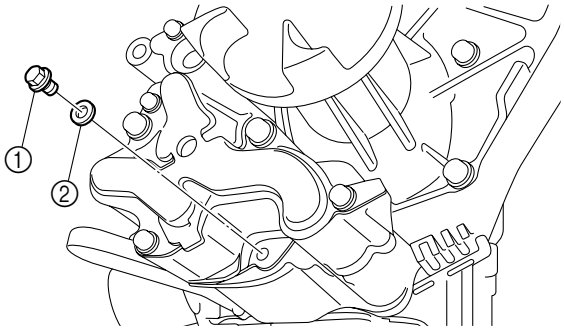

3. Remove the oil pump assy. ③, gasket ④, and dowel pins ⑤.

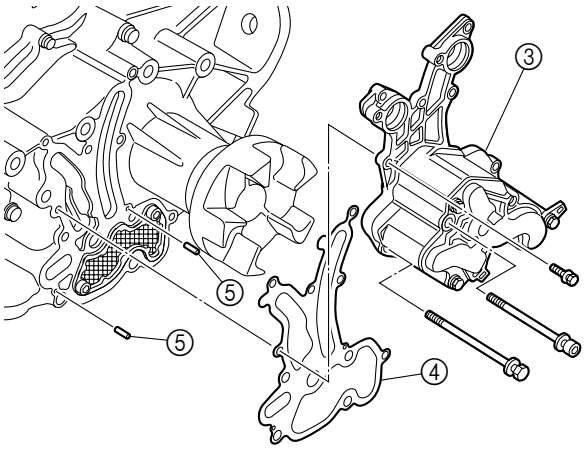

4. Remove the oil strainer ⑥.

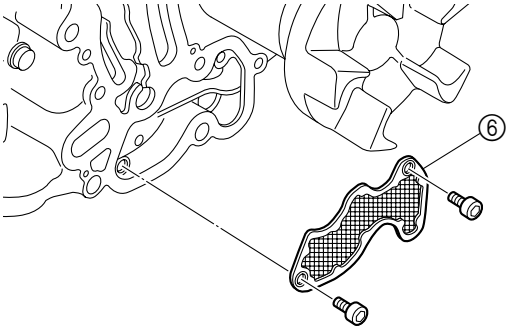

Oil pump assy. check

NOTICE

The oil pump assy. should not be disassembled.

1. Check the oil pump assy. ①. Replace if cracked or damaged.

2. Check the operation of the oil pump shaft ⓐ. Replace the oil pump assy. if the oil pump shaft does not turn smoothly.

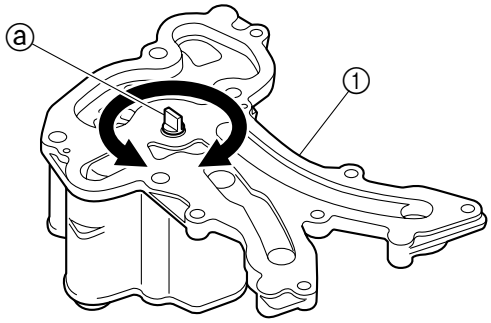

Oil strainer check

1. Check the oil strainer. Clean if there are clogs or contaminants. Replace if cracked or damaged.

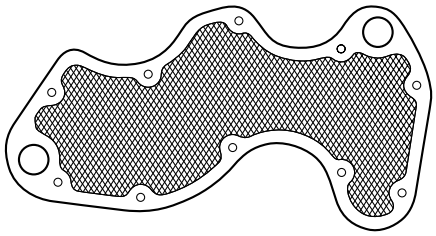

Oil pump assy. installation

1. Install the oil strainer ①, and then tighten the bolts ② to the specified torques in 2 stages.

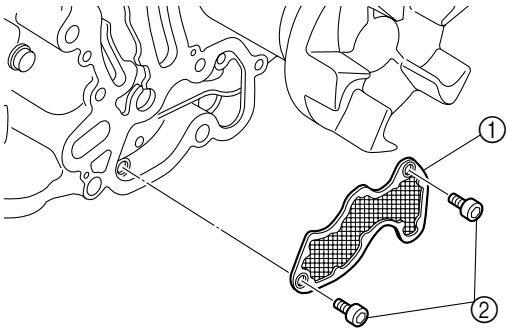

Oil strainer bolt ②: 1st: 4 N·m (0.4 kgf·m, 3.0 ft·lb) 2nd: 8 N·m (0.8 kgf·m, 5.9 ft·lb)

2. Install the dowel pins ③, a new gasket ④, and the oil pump assy. ⑤. ***NOTICE:*** **Do not reuse a gasket, always replace it with a new one.**

3. Tighten the bolts (M8) ⑥ to the specified torques in 2 stages, and then tighten the bolts (M6) ⑦ to the specified torque.

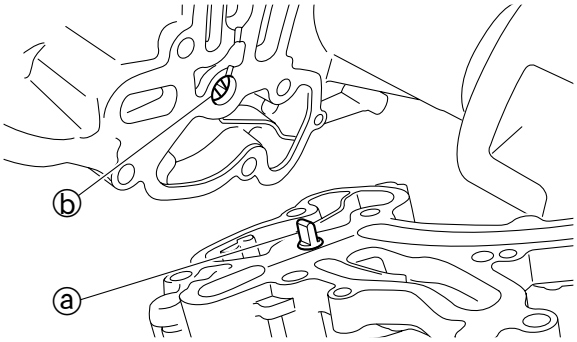

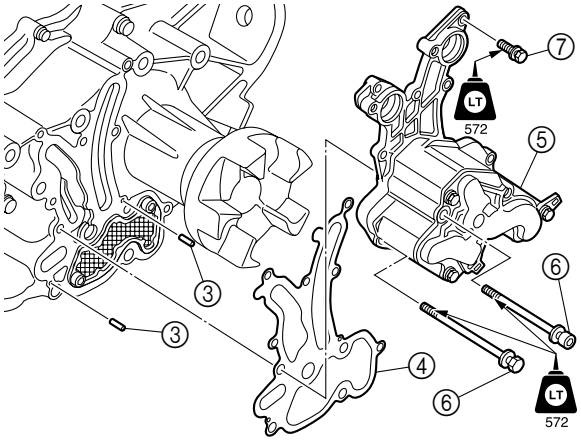

Oil pump assy. bolt (M8) ⑥: 1st: 15 N·m (1.5 kgf·m, 11.1 ft·lb) 2nd: 29 N·m (2.9 kgf·m, 21.4 ft·lb) Oil pump assy. bolt (M6) ⑦: 10 N·m (1.0 kgf·m, 7.4 ft·lb)

TIP:

Align the protrusion ⓐ on the oil pump shaft with the slot ⓑ in the oil pump driven gear shaft.

4. Install the washer ⑧ and drain plug ⑨, and then tighten the drain plug to the specified torque.

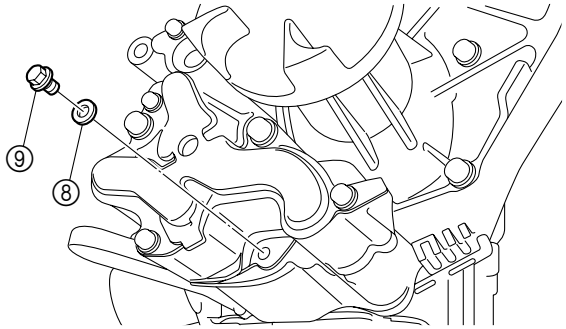

Drain plug ⑨: 13 N·m (1.3 kgf·m, 9.6 ft·lb)

5. Fill the oil pump assy. with engine oil through the scavenge and feed ports. ***NOTICE:*** **Make sure to fill the oil pump assy. with engine oil through the scavenge and feed ports.**

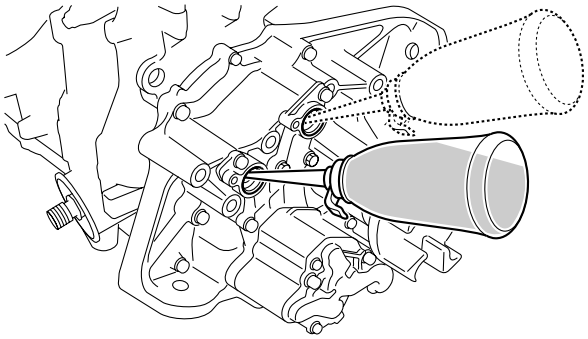

Recommended engine oil: API: SE, SF, SG, SH, SJ, or SL SAE: 10W-30, 10W-40, 20W-40, 20W-50

Reduction drive gear case assy.

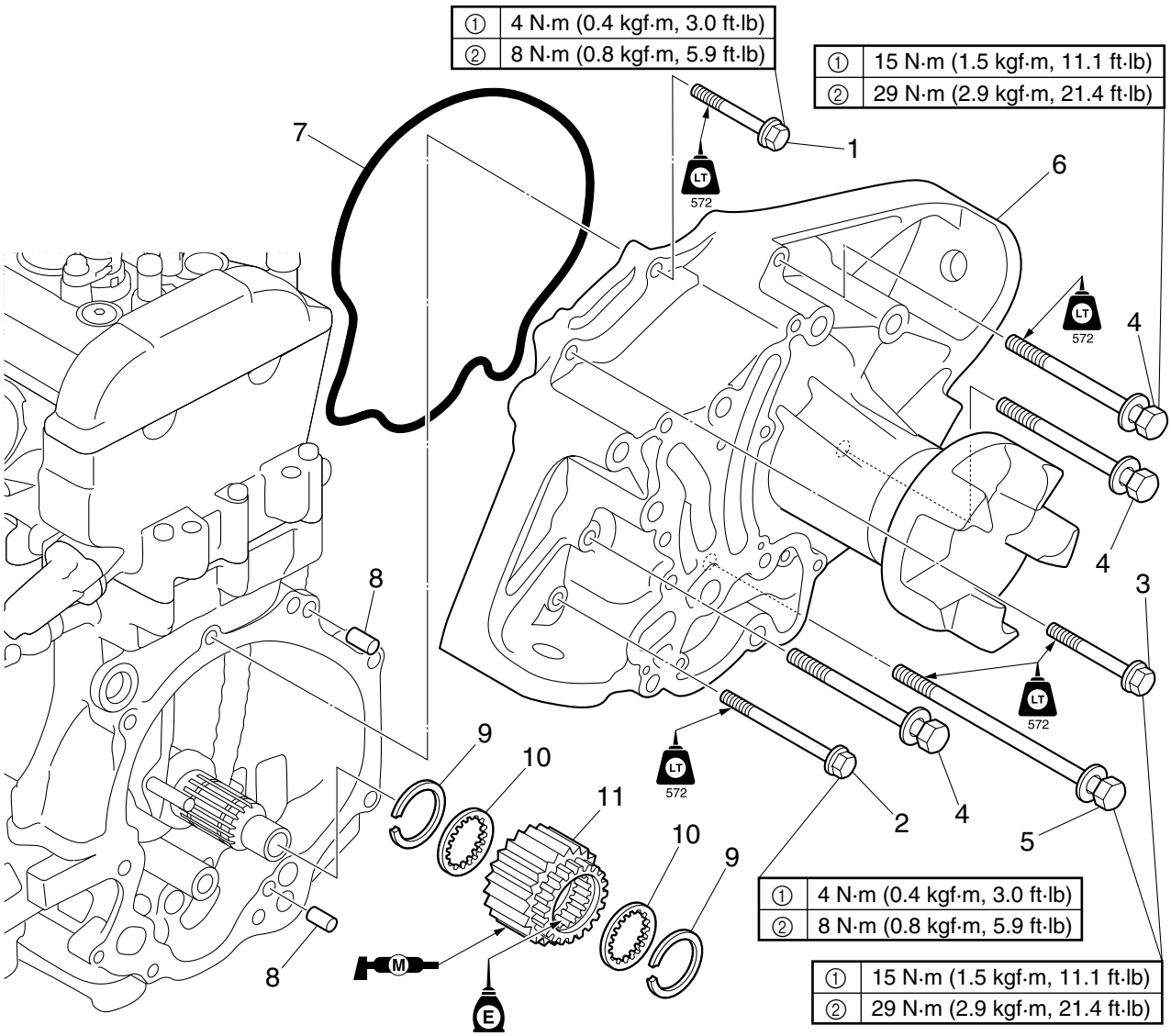

No.	Part name	Q'ty	Remarks
1	Bolt	1	M6 × 35 mm
2	Bolt	1	M6 × 55 mm
3	Bolt	1	M8 × 40 mm
4	Bolt	3	M8 × 70 mm
5	Bolt	1	M8 × 100 mm
6	Reduction drive gear case assy.	1	
7	Gasket	1	**Not reusable**
8	Dowel pin	2	
9	Circlip	2	
10	Washer	2	
11	Reduction drive gear	1	

Reduction drive gear case

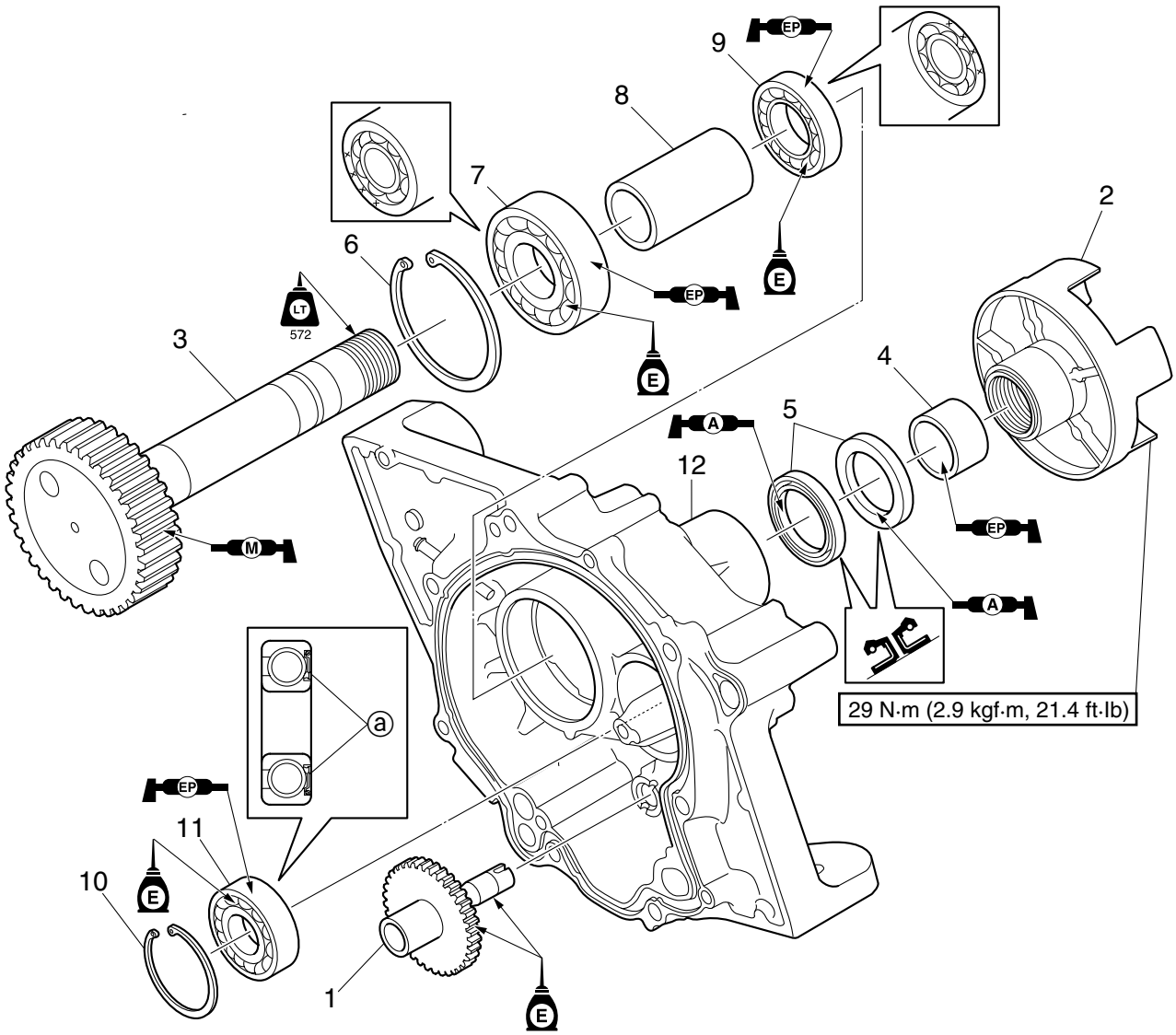

No.	Part name	Q'ty	Remarks
1	Oil pump drive shaft	1	
2	Drive coupling	1	
3	Drive shaft	1	
4	Collar	1	
5	Oil seal	2	**Not reusable**
6	Circlip	1	
7	Front bearing	1	**Not reusable**
8	Collar	1	
9	Rear bearing	1	**Not reusable**
10	Circlip	1	
11	Bearing	1	**Not reusable** ⓐ Sealing side
12	Reduction drive gear case	1	

Reduction drive gear case assy. removal

1. Place a container under the reduction drive gear case assy.

2. Remove the reduction drive gear case assy. ①, gasket ②, and dowel pins ③.

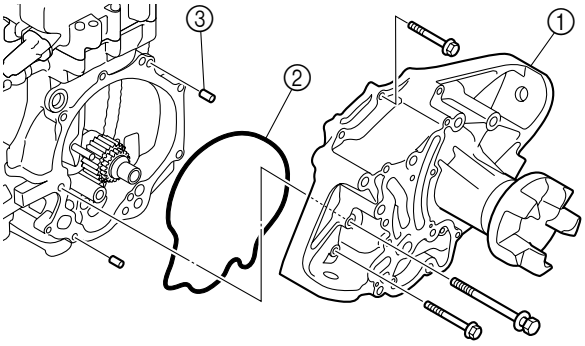

3. Remove the circlips ④, washers ⑤, and reduction drive gear ⑥.

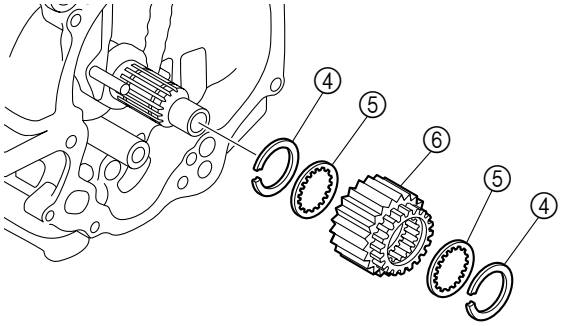

Reduction drive gear case disassembly

1. Remove the oil pump drive shaft ①.

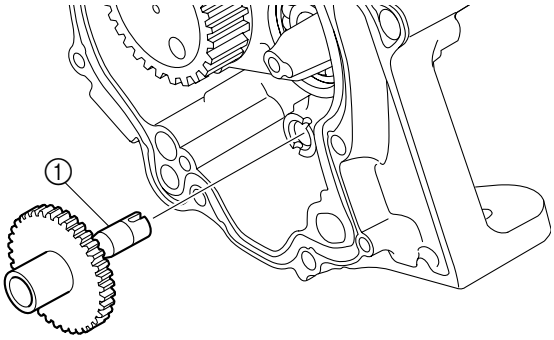

2. Hold the drive shaft ②.

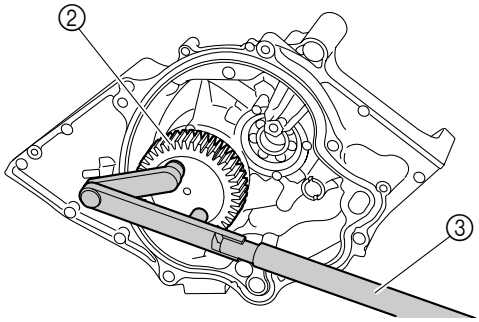

Flywheel magnet holder ③: YB-06139 Flywheel holder ③: 90890-06522

3. Remove the drive coupling ④.

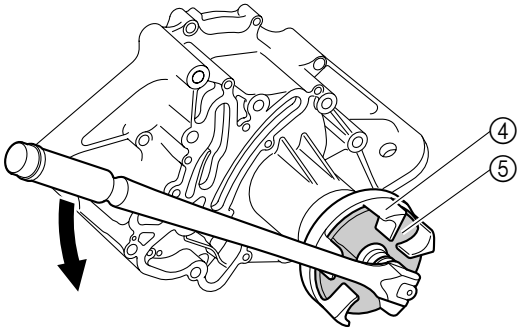

Coupler wrench ⑤: YW-06551/90890-06551

4. Remove the drive shaft ⑥ and collar ⑦.
   NOTICE: **Do not press the drive shaft threads directly**.

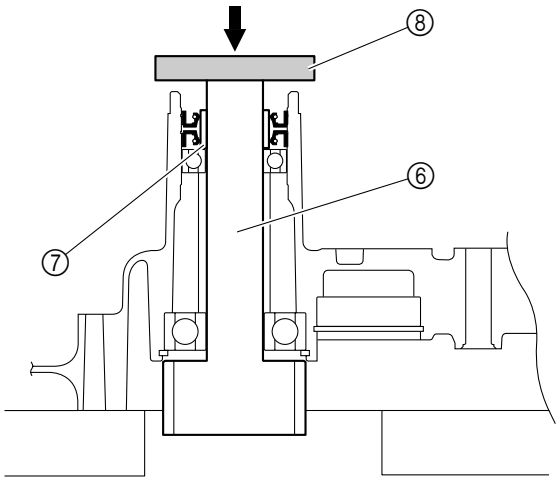

TIP:
Place a block ⑧ between the drive shaft ⑥ and the press.

5. Remove the oil seals ⑨.

A

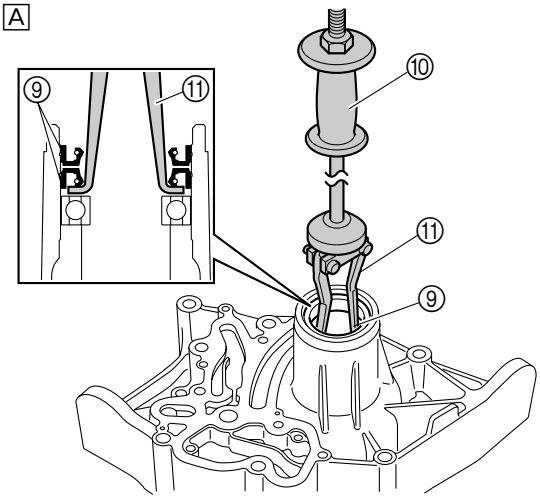

B

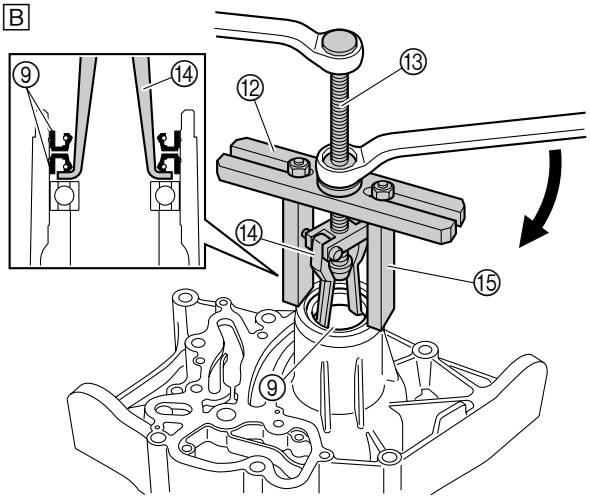

A U.S.A. and Canada
B Worldwide

Slide hammer ⑩: YB-06096 Bearing puller legs ⑪: YB-06523 Stopper guide plate ⑫: 90890-06501 Bearing puller assembly ⑬: 90890-06535 Bearing puller claw 1 ⑭: 90890-06536 Stopper guide stand ⑮: 90890-06538

6. Remove the circlip ⑯, and then remove the front bearing ⑰, collar ⑱, and rear bearing ⑲.

A

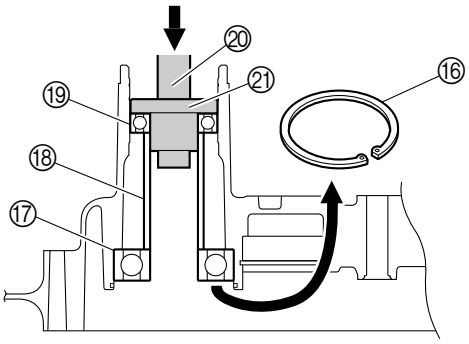

B

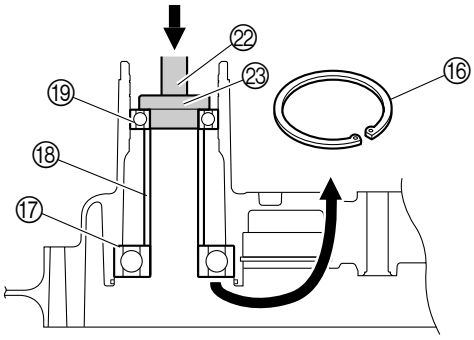

A U.S.A. and Canada
B Worldwide

Driver handle (large) ⑳: YB-06071 Bearing housing bearing installer ㉑: YB-06111 Driver rod L3 ㉒: 90890-06652 Needle bearing attachment ㉓: 90890-06653

TIP:

Make sure to remove the circlip before removing the front bearing.

7. Remove the circlip ㉔, and then remove the reduction drive gear bearing ㉕.

A

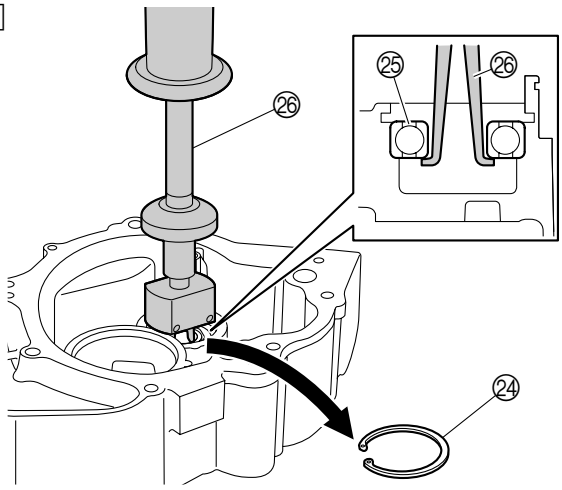

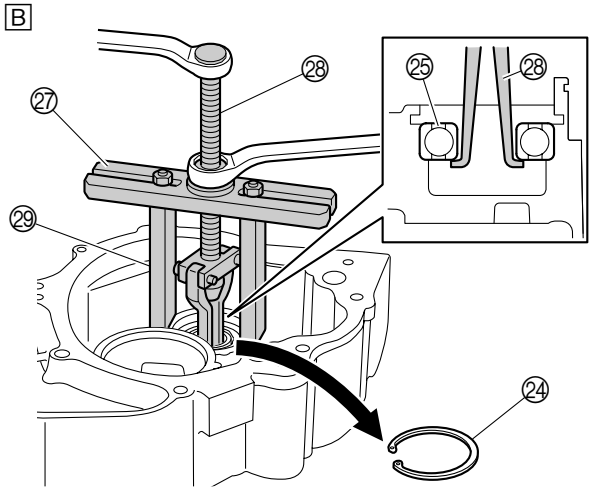

A U.S.A. and Canada
B Worldwide

Slide hammer ㉖: YB-06096
Stopper guide plate ㉗: 90890-06501
Bearing puller assembly ㉘: 90890-06535
Stopper guide stand ㉙: 90890-06538

Reduction drive gear check

1. Check the reduction drive gear. Replace if cracked or damaged.

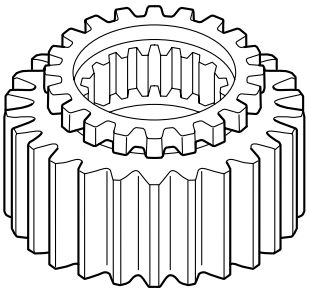

Oil pump drive shaft check

1. Check the oil pump drive shaft. Replace if cracked or damaged.

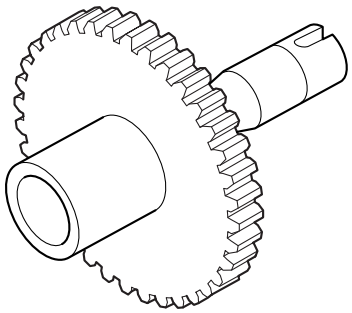

Drive shaft check

1. Check the drive shaft. Replace if cracked or damaged.

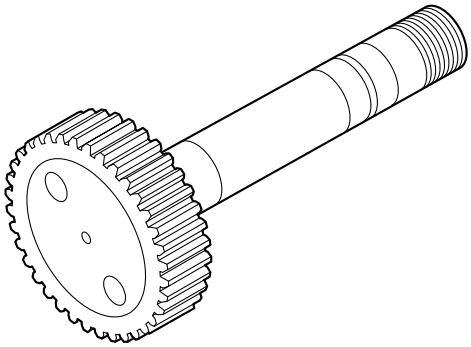

Reduction drive gear case assembly

NOTICE

Do not reuse a bearing or oil seal, always replace it with a new one.

1. Install a new bearing ①, and then install the circlip ②.

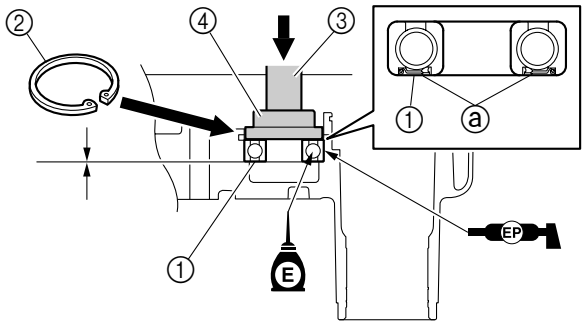

Driver handle (large) ③: YB-06071
Oil seal installer ④: YB-06085
Driver rod LS ③: 90890-06606
Ball bearing attachment ④: 90890-06631

TIP:

Face the sealing side ⓐ on the reduction drive gear bearing down.

2. Install a new front bearing ⑤.

A

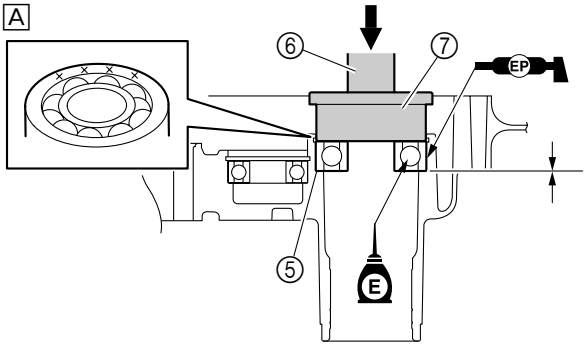

B

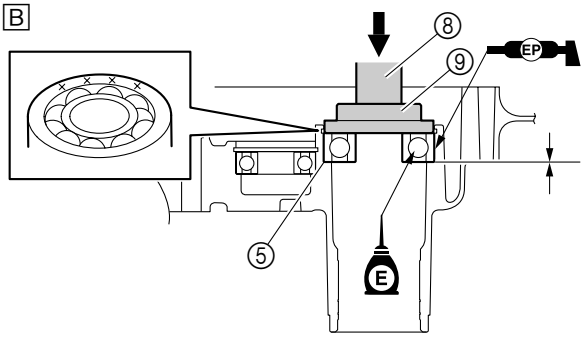

A U.S.A. and Canada
B Worldwide

Driver handle (large) ⑥: YB-06071 Bearing cup installer ⑦: YB-06199-A Driver rod LS ⑧: 90890-06606 Ball bearing attachment ⑨: 90890-06657

3. Install the collar ⑩ and a new rear bearing ⑪, and then install the circlip ⑫.
   NOTICE: **After installing the rear bearing, check that the collar turns smoothly.**

A

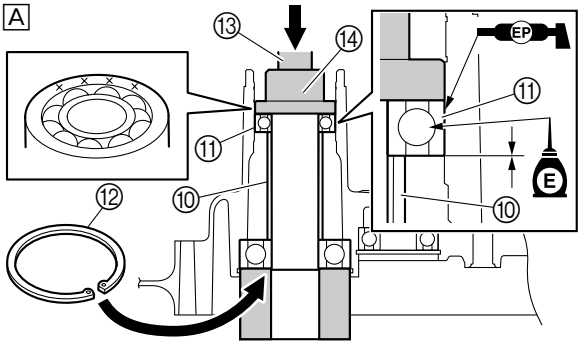

B

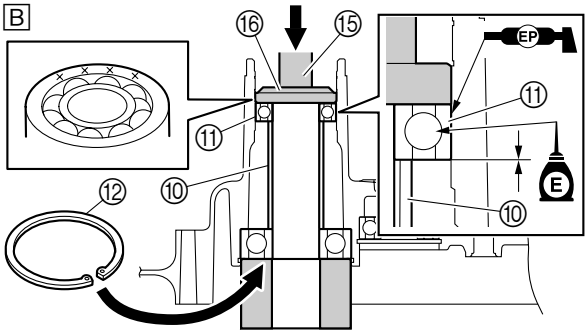

A U.S.A. and Canada
B Worldwide

Driver handle (large) ⑬: YB-06071 Oil seal installer ⑭: YB-06085 Driver rod LS ⑮: 90890-06606 Bearing outer race attachment ⑯: 90890-06624

TIP:

Before installing the rear bearing, hold both the inner and outer races of the front bearing in place as shown with a pipe that is more than 40 mm (1.57 in) long and has an outer diameter of 70 mm (2.76 in) and an inner diameter of 30 mm (1.18 in).

4. Install a new oil seal ⑰ to the specified depth ⓐ, and then install a new oil seal ⑱ to the specified depth ⓑ.

A

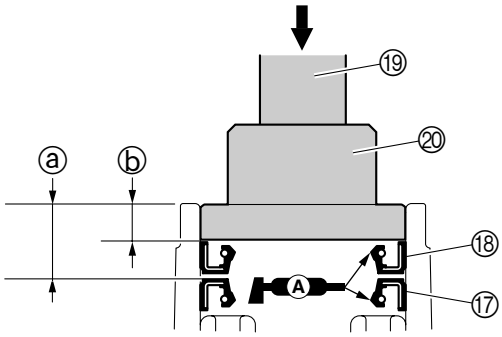

B

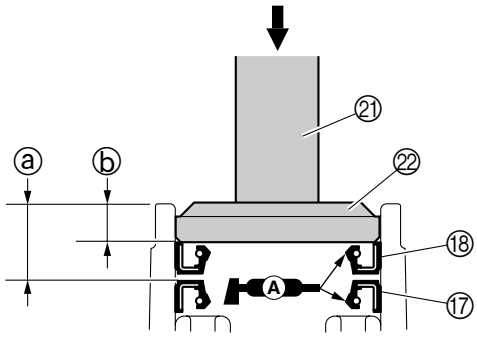

A U.S.A. and Canada
B Worldwide

Driver handle (large) ⑲: YB-06071 Oil seal installer ⑳: YB-06085 Driver rod LS ㉑: 90890-06606 Bearing outer race attachment ㉒: 90890-06624

Depth ⓐ: 17.9 ± 0.2 mm (0.70 ± 0.01 in) Depth ⓑ: 9.3 ± 0.2 mm (0.37 ± 0.01 in)

5. Install the drive shaft ㉓ and collar ㉔.

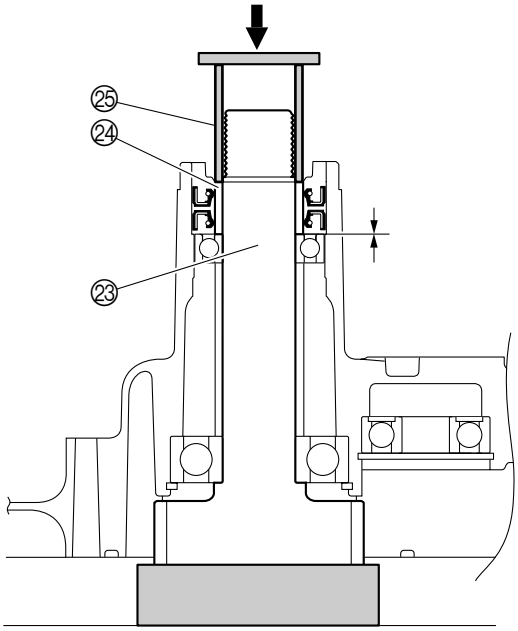

TIP:

Press the collar ㉔ onto the drive shaft ㉓ with a pipe ㉕ that is more than 30 mm (1.18 in) long and has an outer diameter of approximately 35 mm (1.38 in) and an inner diameter of approximately 28 mm (1.10 in).

6. Install the drive coupling ㉖.

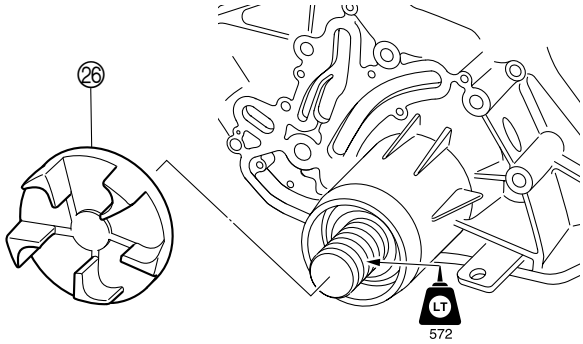

7. Hold the drive shaft ㉗.

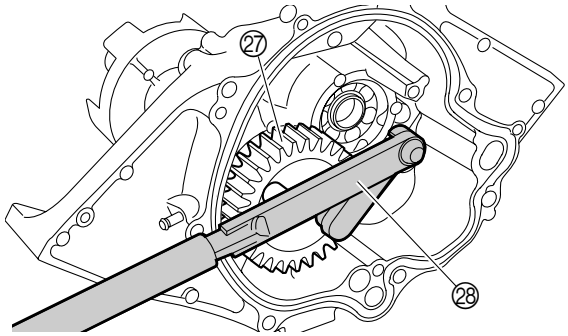

5

Flywheel magnet holder ㉘: YB-06139 Flywheel holder ㉘: 90890-06522

8. Tighten the drive coupling ㉖ to the specified torque.

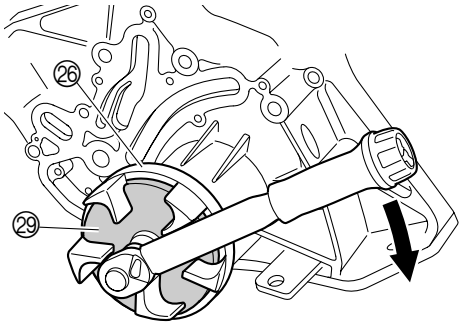

Coupler wrench ㉙: YW-06551/90890-06551

Drive coupling ㉖: 29 N·m (2.9 kgf·m, 21.4 ft·lb)

9. Install the oil pump drive shaft ㉚.

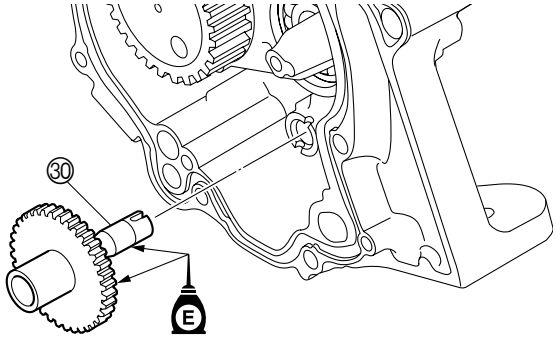

Reduction drive gear case assy. installation

1. Place a container under the reduction drive gear case assy.

2. Install the circlips ①, washers ②, and reduction drive gear ③.

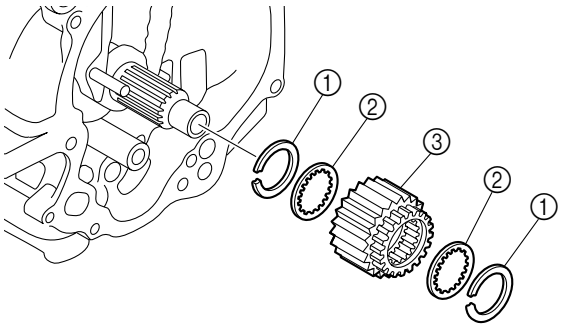

3. Install the dowel pins ④, a new gasket ⑤, and the reduction drive gear case assy. ⑥, and then tighten the bolts (M8) ⑦ to the specified torques in 2 stages. ***NOTICE:*** **Do not reuse a gasket, always replace it with a new one.**

4. Tighten the bolts (M6) ⑧, to the specified torques in 2 stages.

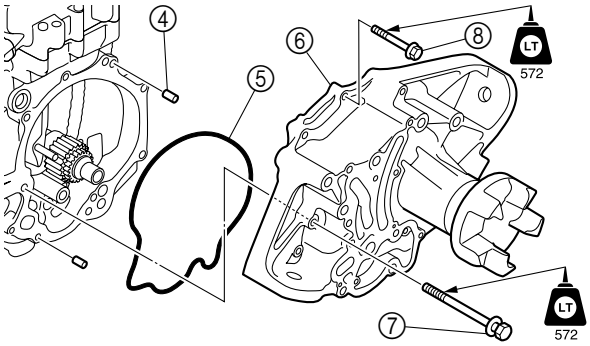

Reduction drive gear case assy. bolt (M8) ⑦: 1st: 15 N·m (1.5 kgf·m, 11.1 ft·lb) 2nd: 29 N·m (2.9 kgf·m, 21.4 ft·lb) Reduction drive gear case assy. bolt (M6) ⑧: 1st: 4 N·m (0.4 kgf·m, 3.0 ft·lb) 2nd: 8 N·m (0.8 kgf·m, 5.9 ft·lb)

Cylinder head cover

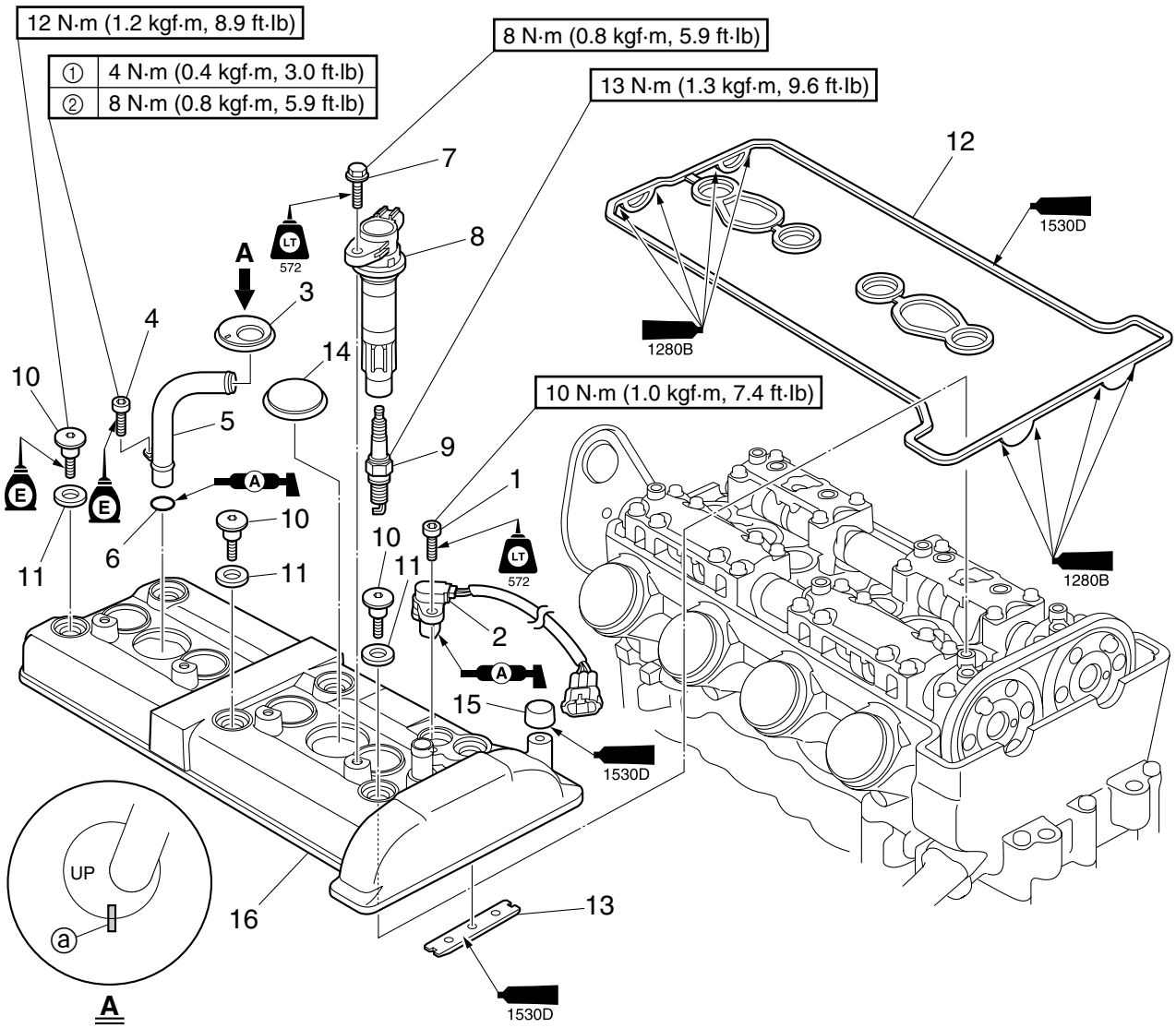

No.	Part name	Q'ty	Remarks
1	Bolt	1	M6 × 16 mm
2	Cam position sensor	1	
3	Rubber seal	1	ⓐ Alignment mark
4	Bolt	1	M6 × 16 mm
5	Cooling water pipe	1	
6	O-ring	1	**Not reusable**
7	Bolt	4	M6 × 16 mm
8	Ignition coil	4	
9	Spark plug	4	
10	Bolt	6	M6 × 14 mm
11	Rubber mount	6	
12	Cylinder head cover gasket	1	**Not reusable**
13	Timing chain guide (top side)	1	
14	Rubber seal	1	
15	Cover	1	
16	Cylinder head cover	1	

Camshaft

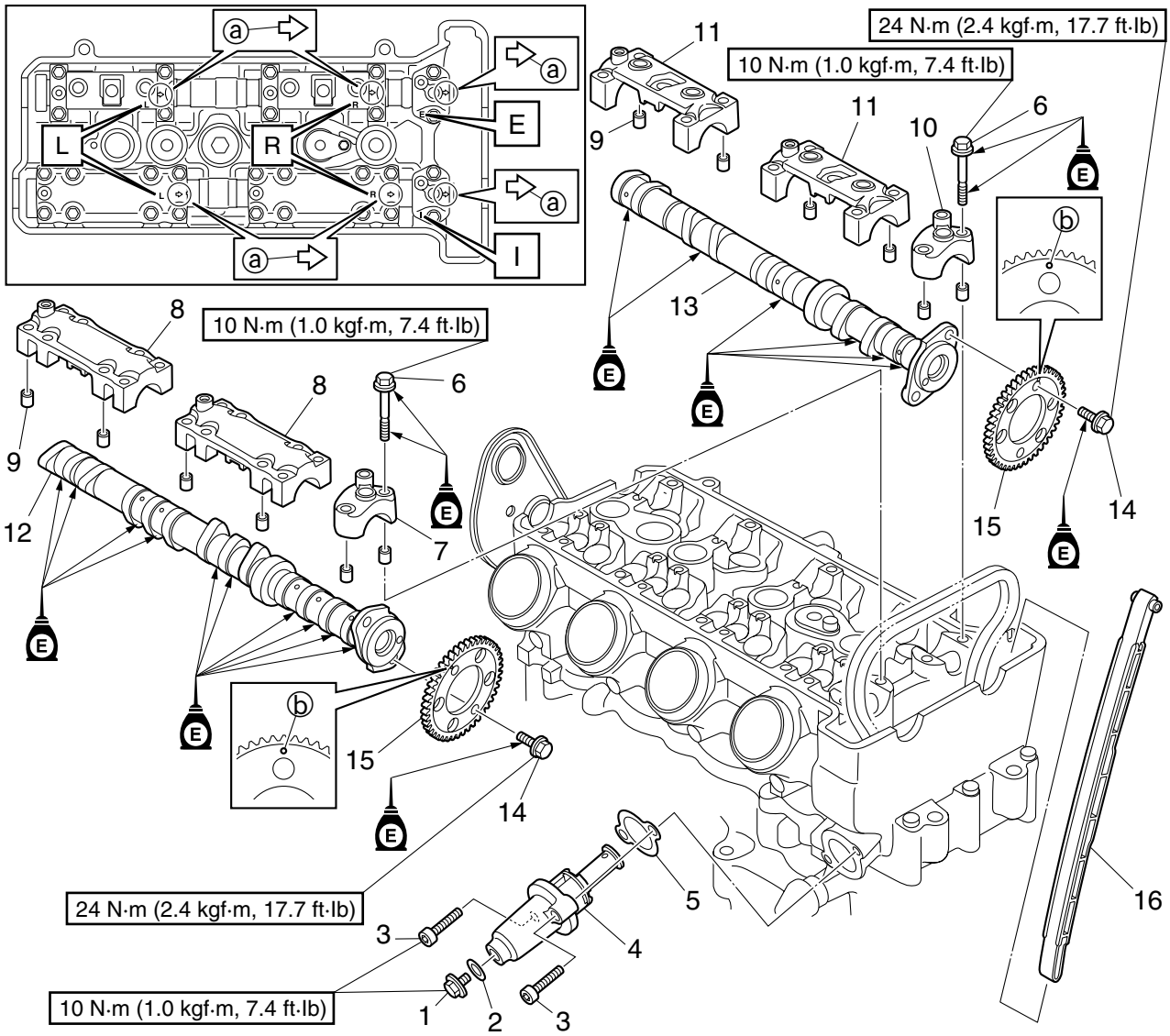

No.	Part name	Q'ty	Remarks
1	Cap bolt	1	M6 × 8 mm
2	Gasket	1	
3	Bolt	2	M6 × 25 mm
4	Timing chain tensioner	1	
5	Gasket	1	**Not reusable**
6	Bolt	28	M6 × 35 mm
7	Intake camshaft cap	1	ⓐ Arrow mark
8	Intake camshaft cap	2	ⓐ Arrow mark
9	Dowel pin	12	
10	Exhaust camshaft cap	1	ⓐ Arrow mark
11	Exhaust camshaft cap	2	ⓐ Arrow mark
12	Intake camshaft	1	
13	Exhaust camshaft	1	
14	Bolt	4	M7 × 11 mm
15	Sprocket	2	ⓑ Punch mark
16	Timing chain guide (exhaust side)	1	

Cylinder head cover removal

1. Remove the cam position sensor ①.

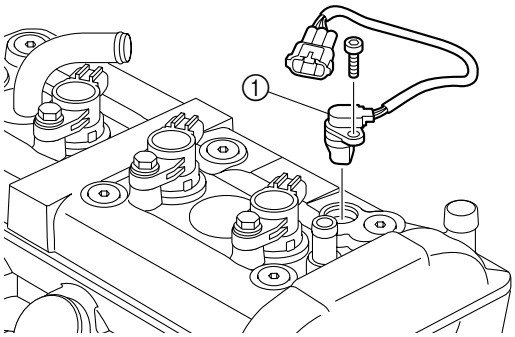

2. Remove the rubber seal ②, cooling water pipe ③, and O-ring ④.

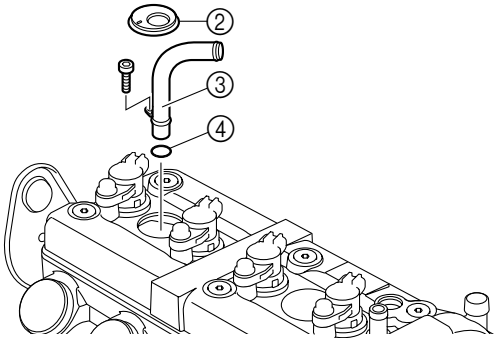

3. Remove the ignition coils ⑤ and spark plugs ⑥.

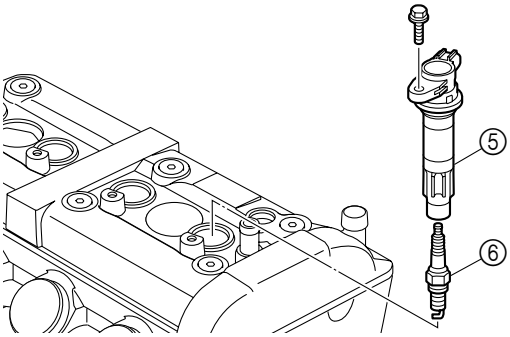

4. Remove the cylinder head cover ⑦.

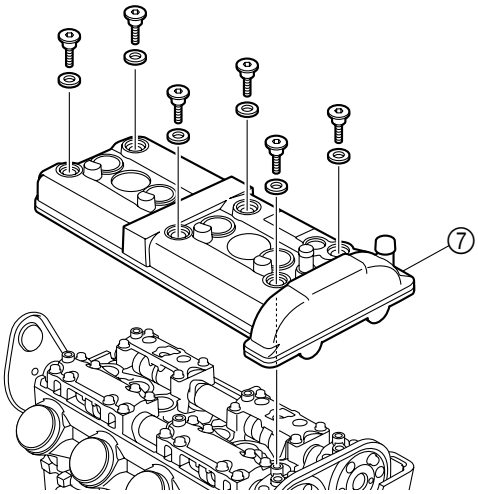

Cylinder head cover disassembly

1. Remove the cylinder head cover gasket ① and timing chain guide (top side) ②.

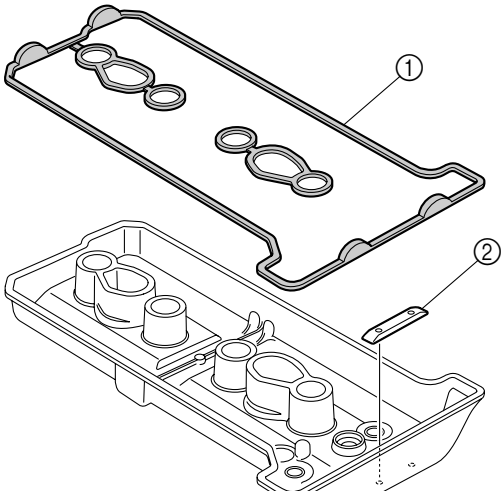

2. Remove the rubber seal ③ and cover ④.

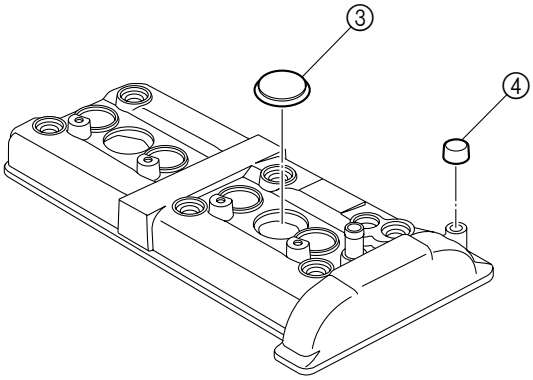

Camshaft removal

NOTICE

When installing the camshafts, piston #1 must be positioned at TDC. Therefore, do not turn the crankshaft after removing the camshafts.

1. Install the special service tools ①, ②, and ③ into spark plug hole #1.

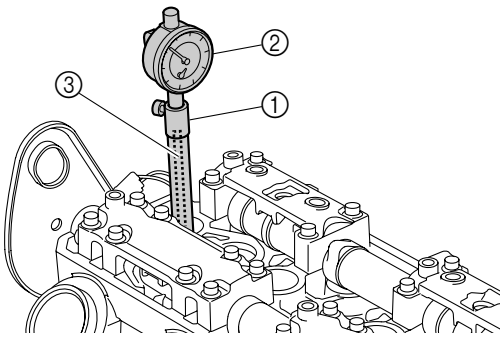

Dial gauge stand 173 ①: 90890-06583 Dial gauge stand set: YB-06585 Dial indicator gauge 0–5 mm ②: YU-03097 Dial gauge set ②: 90890-01252 Dial gauge needle 173 ③: 90890-06584

2. Position piston #1 at TDC by turning the exhaust camshaft sprocket ④ clockwise with the special service tool ⑤, using the dial gauge to ensure that the piston has reached TDC.

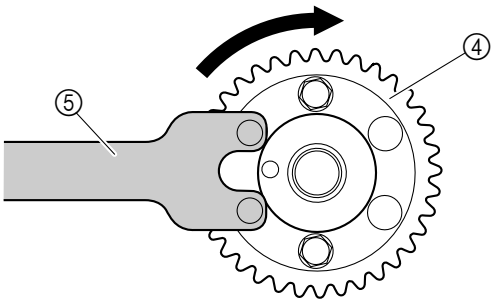

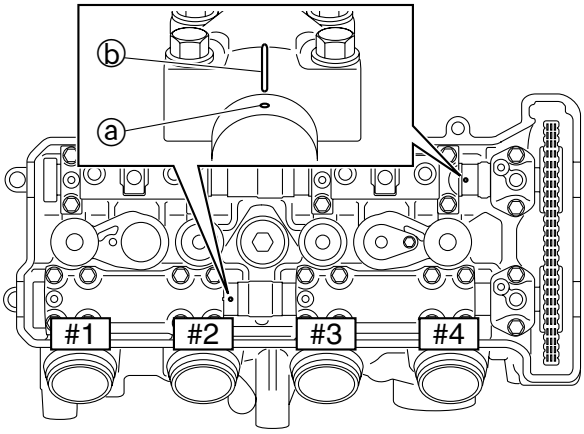

Camshaft wrench ⑤: 90890-06724

TIP:

Make sure that the punch marks ⓐ on the camshafts are aligned with the marks ⓑ on the camshaft caps.

3. Make alignment marks ⓒ on the camshaft sprockets and camshafts.

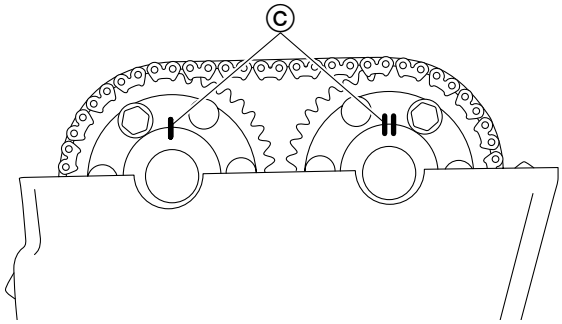

TIP:

For reference during installation, make an alignment mark ⓒ on each camshaft and camshaft sprocket.

4. Remove the timing chain tensioner ⑥ and gasket ⑦.

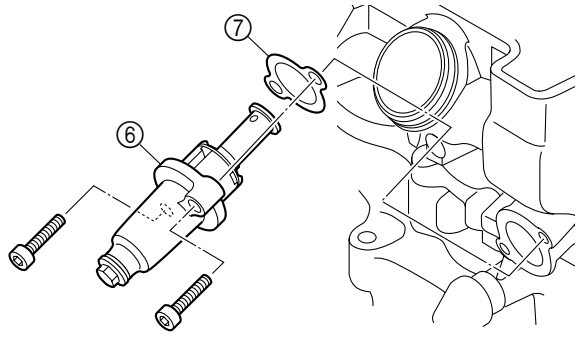

TIP:
Loosen the timing chain tensioner bolts evenly.

5. Loosen the camshaft cap bolts in the order 1, 2, and so on.

6. Remove the intake and exhaust camshaft caps.

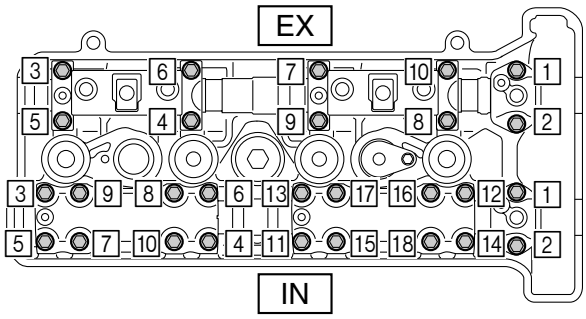

TIP:
Gradually loosen the camshaft cap bolts.

7. Remove the intake camshaft ⑧ and exhaust camshaft ⑨.

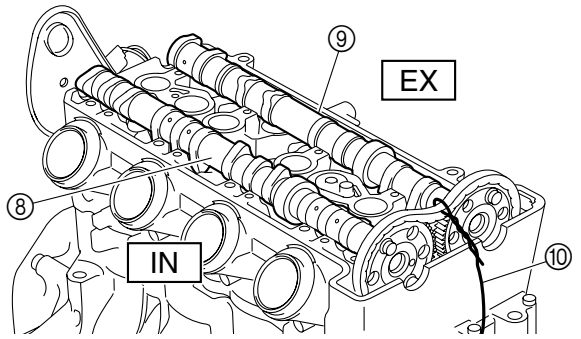

TIP:
To prevent the timing chain from falling into the crankcase, secure it with a wire ⑩.

8. Remove the timing chain guide (exhaust side) ⑪.

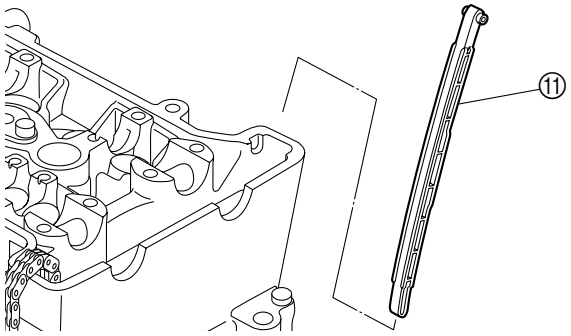

Camshaft sprocket removal

1. Hold each camshaft sprocket with the special service tool ①, and then loosen the bolts ②.

2. Remove the intake camshaft sprocket ③ and exhaust camshaft sprocket ④.

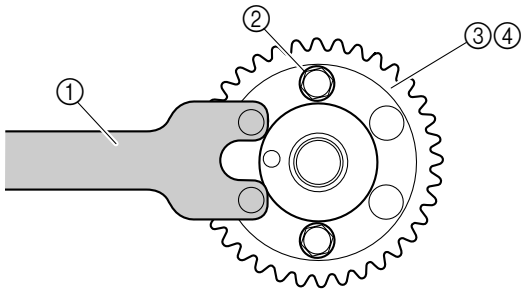

Camshaft wrench ①: 90890-06724

Camshaft check

1. Check the camshaft lobes. Replace if pitted or scratched.

2. Measure the camshaft lobe dimensions ⓐ and ⓑ.

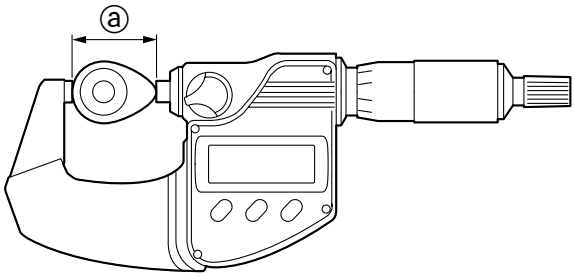

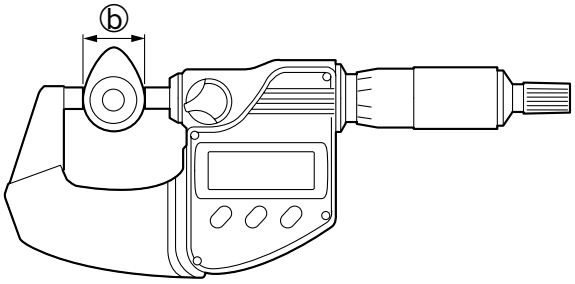

Camshaft lobe dimensions
(Reference data):
Intake:
ⓐ 31.800 mm (1.252 in)
ⓑ 25.000 mm (0.984 in)
Exhaust:
ⓐ 30.750 mm (1.211 in)
ⓑ 25.000 mm (0.984 in)

3. Measure the camshaft journal diameter. Replace if out of specification.

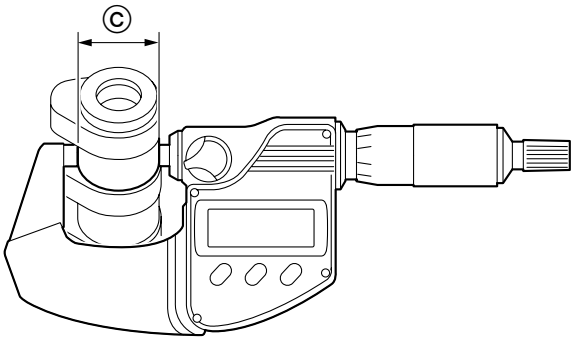

Camshaft journal diameter ⓒ:
Intake and exhaust:
24.437–24.450 mm
(0.9621–0.9626 in)

4. Measure the camshaft runout. Replace if out of specification.

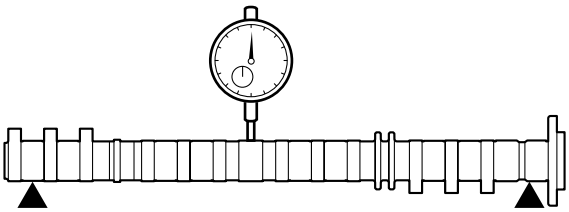

Camshaft runout limit:
0.015 mm (0.0006 in)

Camshaft journal oil clearance check

1. Remove the valve lifters ① and valve pads ②.

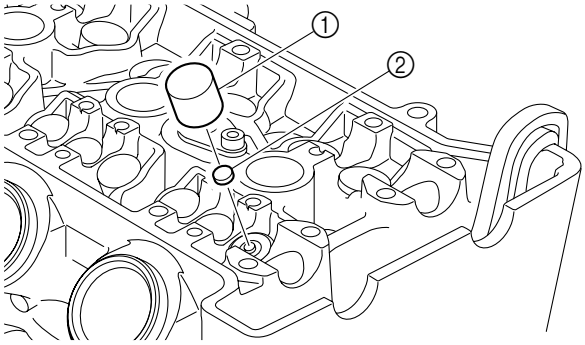

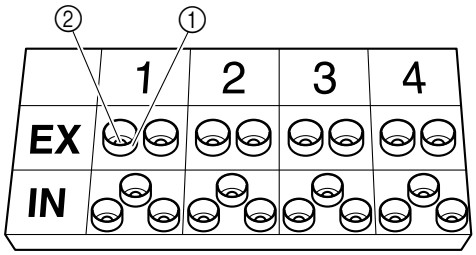

TIP:
Make a note of the position of each valve lifter ① and valve pad ② so that they can be installed in their original positions.

2. Place the camshafts on the cylinder head.

3. Put a piece of Plastigauge ③ on each camshaft journal, parallel to the camshaft.

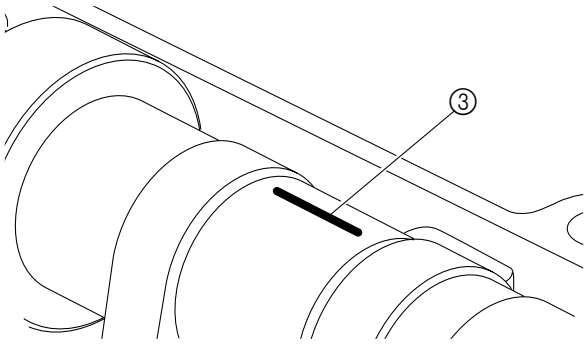

TIP:
Do not put the Plastigauge over the oil hole in the camshaft journal.

4. Install the exhaust camshaft caps ④ and ⑤, and intake camshaft caps ⑥ and ⑦.

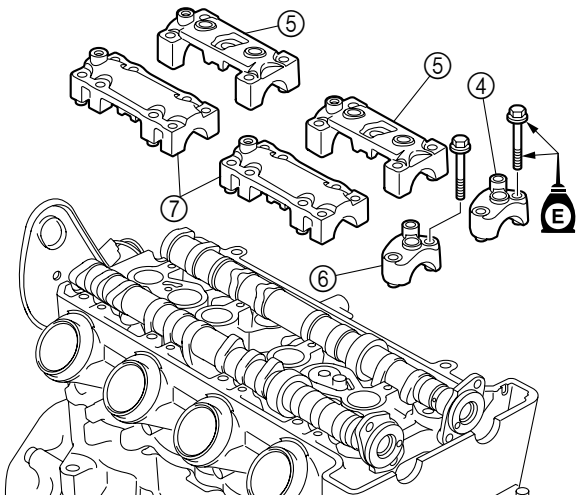

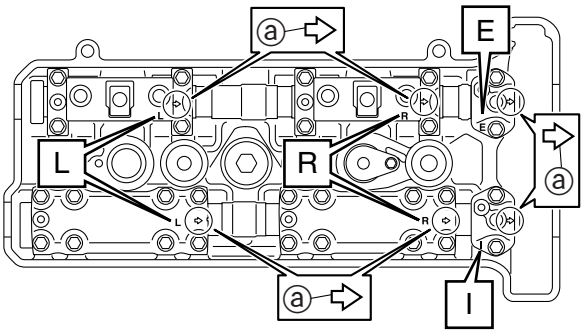

TIP:
When installing the camshaft caps, make sure that the arrow marks ⓐ on the camshaft caps point toward the camshaft sprockets.

5. Tighten the camshaft cap bolts ⑧ to the specified torque in the order [1], [2], and so on.

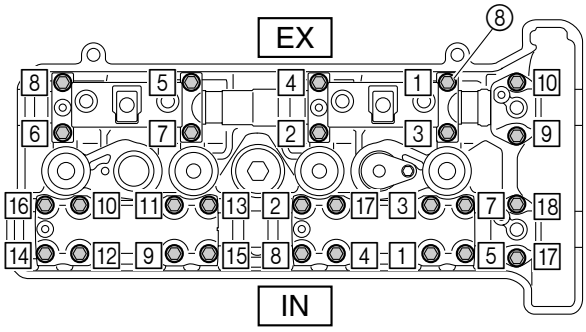

Camshaft cap bolt ⑧: 10 N·m (1.0 kgf·m, 7.4 ft·lb)

TIP:
- Make sure to keep the camshafts level.
- Do not turn the camshafts when measuring the camshaft journal oil clearance check with the Plastigauge.

6. Loosen the camshaft cap bolts in the order [1], [2], and so on.

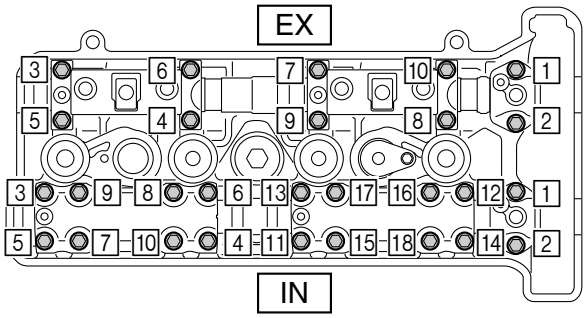

7. Remove the camshaft caps, and then measure the width of the Plastigauge ③. Replace the cylinder head assy. if out of specification.

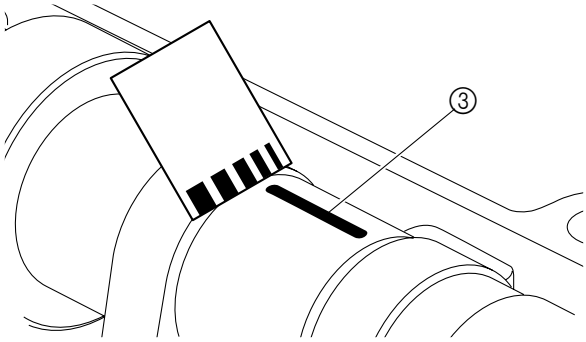

Camshaft-journal-to-camshaft-cap clearance: 0.050–0.084 mm (0.0020–0.0033 in)

Camshaft sprocket check

1. Check the camshaft sprockets. Replace the camshaft sprockets and timing chain as a set if damaged or worn. See “Timing chain and timing chain guide (intake side) removal” (5-96).

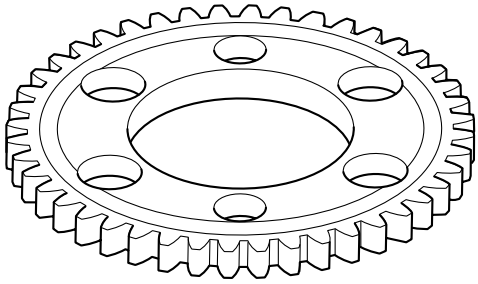

Timing chain tensioner check

1. While lightly pressing the timing chain tensioner rod ⓐ, turn the tensioner rod fully clockwise with a thin screwdriver ①.

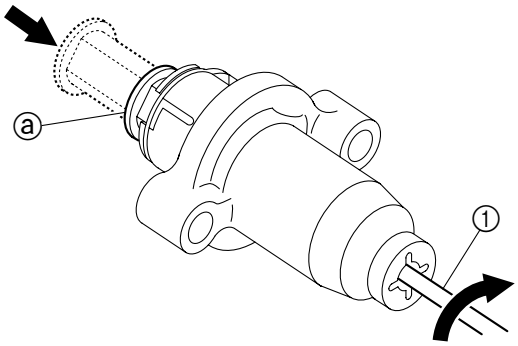

2. Remove the screwdriver ① and slowly release the timing chain tensioner rod ⓐ.

3. Make sure that the timing chain tensioner rod ⓐ comes out of the timing chain tensioner housing ⓑ smoothly. Replace the timing chain tensioner if there is rough movement.

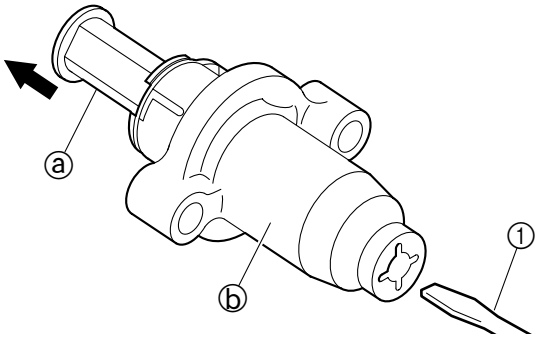

Camshaft sprocket installation

1. Install the exhaust camshaft sprocket ① and intake camshaft sprocket ②.

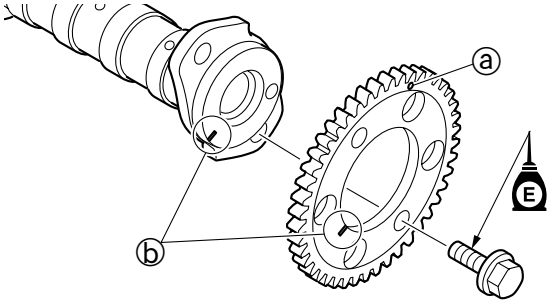

TIP:

- Install each camshaft sprocket with the punch mark ⓐ facing outward.
- When installing an original camshaft sprocket, make sure to align the alignment marks ⓑ made during removal.

2. Hold each camshaft sprocket with the special service tool ③ and then tighten the camshaft sprocket bolts ④ to the specified torque.

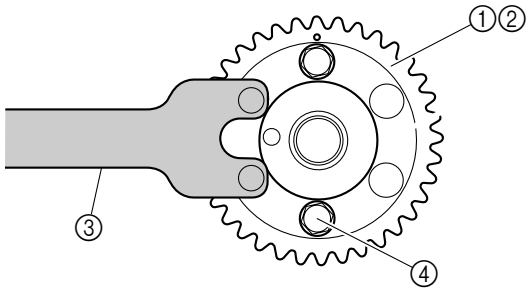

Camshaft wrench ④: 90890-06724

Camshaft sprocket bolt ③: 24 N·m (2.4 kgf·m, 17.7 ft·lb)

Camshaft installation

1. Install the valve pads ① and valve lifters ② in their original positions.

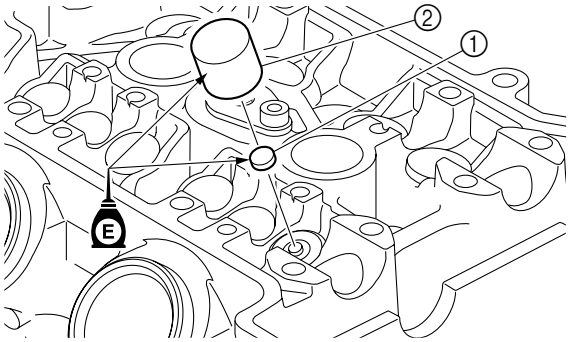

2. Install the timing chain guide (exhaust side) ③.

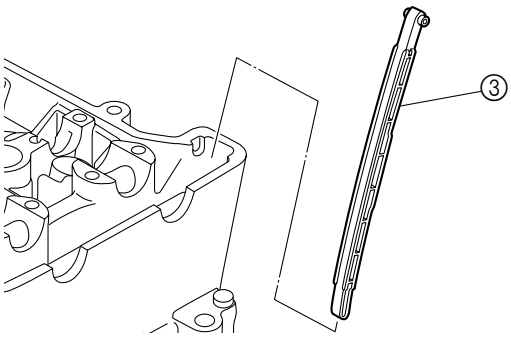

3. Install the exhaust camshaft ④, and then install the intake camshaft ⑤.

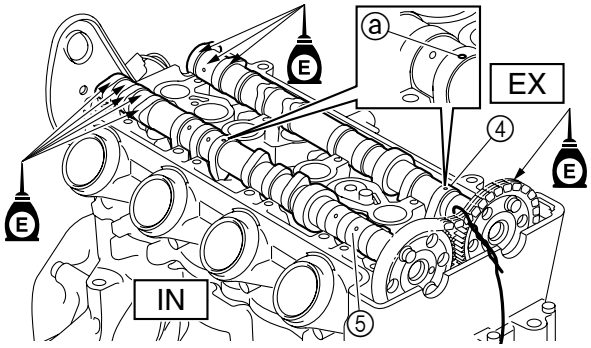

TIP:
Make sure that the punch marks ⓐ on the camshafts face up.

4. Remove the wire from the timing chain.

5. Install the dowel pins ⑥, exhaust camshaft caps ⑦ and ⑧, and intake camshaft caps ⑨ and ⑩.

6. Apply engine oil to the threads and seats of the camshaft cap bolts ⑪.

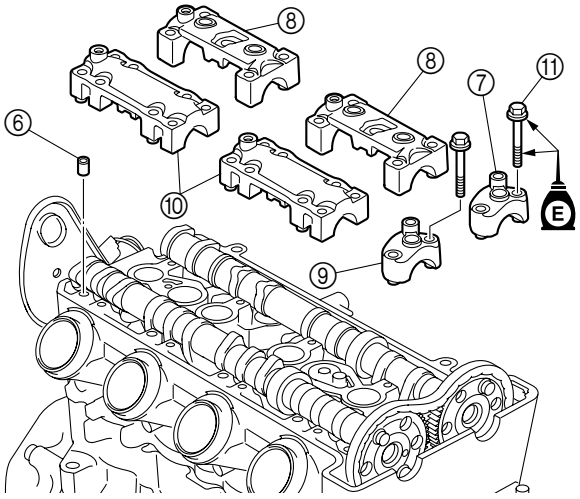

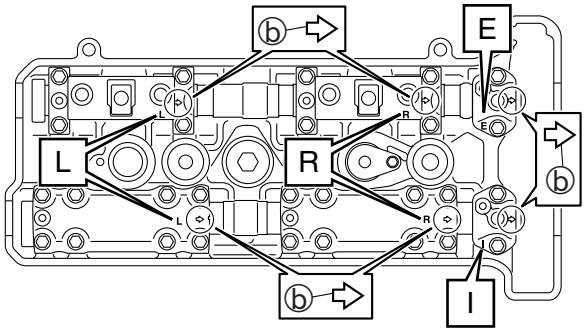

TIP:
When installing the camshaft caps, make sure that the arrow marks ⓑ on the camshaft caps point toward the camshaft sprockets.

7. Tighten the camshaft cap bolts ⑪ until camshaft caps contact the cylinder head in the order [1], [2], and so on.

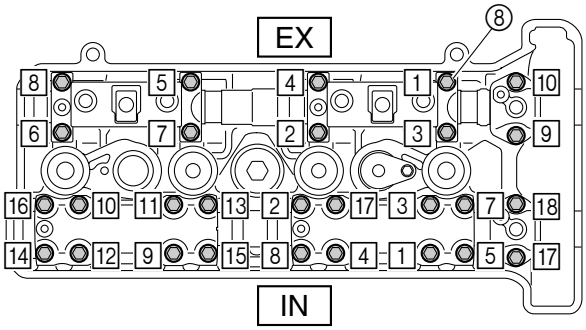

TIP:
Make sure to keep the camshafts level.

8. Tighten the camshaft cap bolts ⑪ to the specified torque in the order [1], [2], and so on.

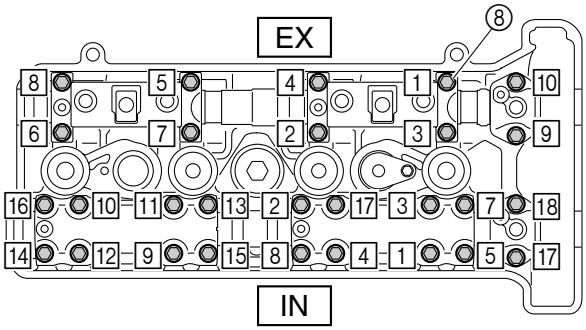

9. Align the punch marks ⓐ on the camshafts with the marks ⓒ on the camshaft caps.

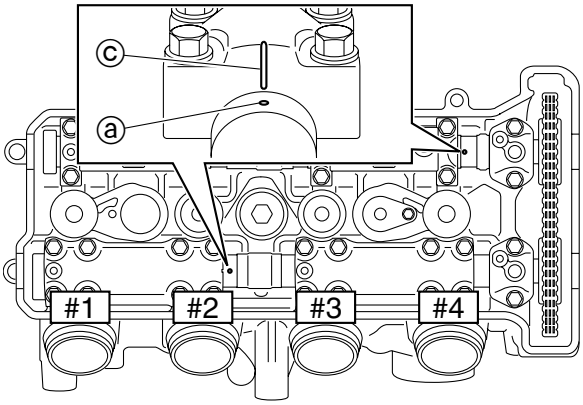

Camshaft cap bolt ⑪: 10 N·m (1.0 kgf·m, 7.4 ft·lb)

10. While lightly pressing the timing chain tensioner rod ⓓ, turn the tensioner rod fully clockwise with a thin screwdriver ⑫.

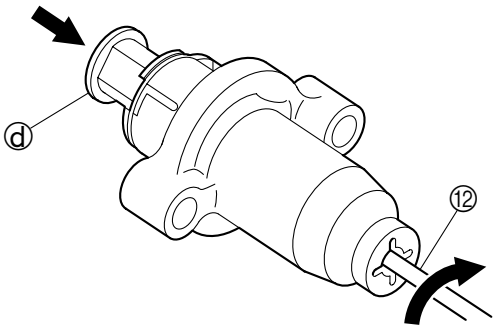

TIP:

Keep the timing chain tensioner rod ⓓ in the fully retracted position with the thin screwdriver ⑫ until the timing chain tensioner is installed onto the cylinder head and the timing chain tensioner bolts are tightened.

11. Install a new gasket ⑬ and the timing chain tensioner ⑭ onto the cylinder block. ***NOTICE:*** **Do not reuse a gasket, always replace it with a new one.**

TIP:

Make sure that the "UP" mark ⓔ on the timing chain tensioner faces up.

12. Tighten the timing chain tensioner bolts ⑮ to the specified torque.

13. Remove the screwdriver ⑫, make sure that the timing chain tensioner rod releases, and then tighten the cap bolt ⑯ to the specified torque.

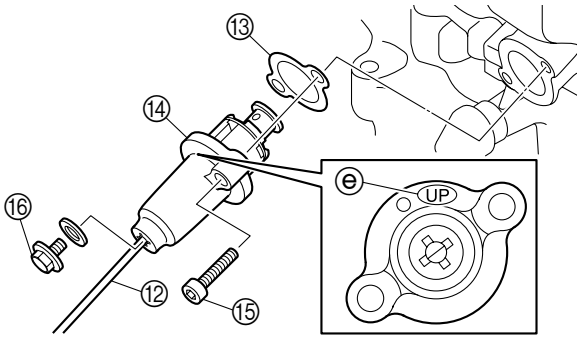

Timing chain tensioner bolt ⑮: 10 N·m (1.0 kgf·m, 7.4 ft·lb) Cap bolt ⑯: 10 N·m (1.0 kgf·m, 7.4 ft·lb)

14. Install the special service tools ⑰, ⑱, and ⑲ into spark plug hole #1.

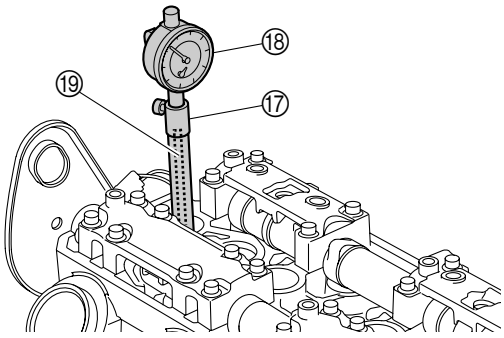

Gauge stand 173 ⑰: 90890-06583 Dial gauge stand set: YB-06585 Dial indicator gauge 0–5 mm ⑱: YU-03097 Dial gauge set ⑱: 90890-01252 Dial gauge needle 173 ⑲: 90890-06584

15. Position piston #1 at TDC by turning the exhaust camshaft sprocket ⑳ clockwise with the special service tool ㉑, using the dial gauge to ensure that the piston has reached TDC.

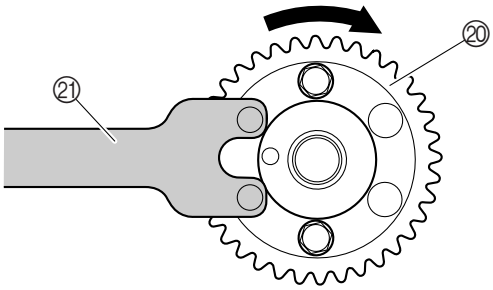

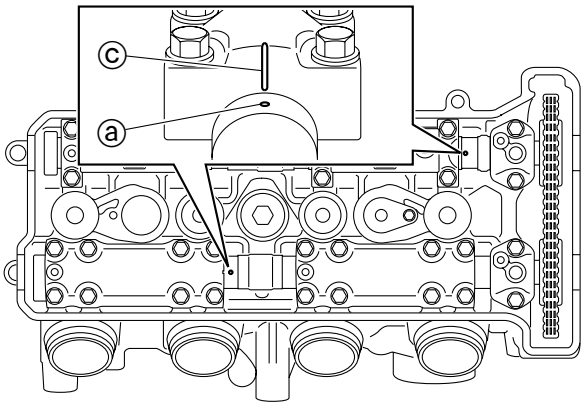

Camshaft wrench ㉑: 90890-06724

TIP:

- Make sure that the camshafts turn smoothly. Reinstall the camshafts if the camshafts do not turn smoothly. See the installation steps.
- Make sure that the punch marks ⓐ on the camshafts are aligned with the marks ⓒ on the camshaft caps. Reinstall the camshafts if the punch marks ⓐ are not aligned with the marks ⓒ. See the installation steps.

16. Check that the portion ⓕ of the timing chain is taut.

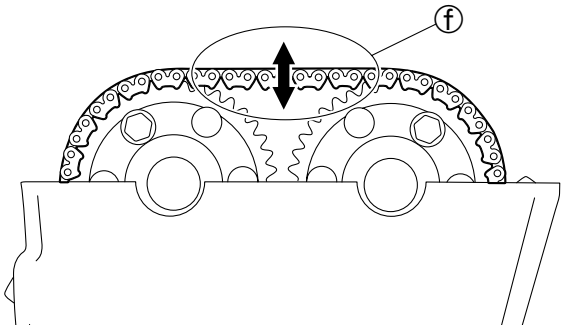

Valve clearance adjustment

1. Measure the valve clearances. See “Valve clearance measurement” (3-8).

2. Remove the camshaft caps and camshafts. See “Camshaft removal” (5-61).

3. Remove the valve lifters ① and valve pads ②.

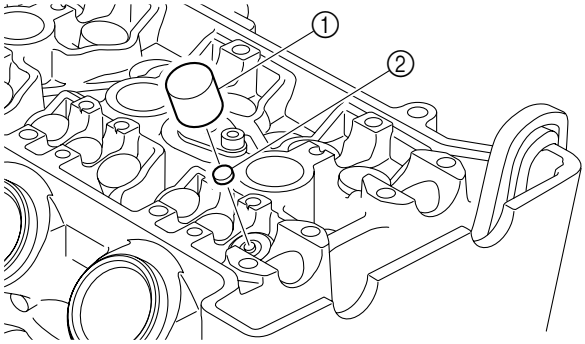

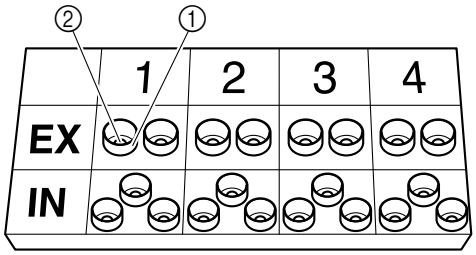

TIP:

Make a note of the position of each valve lifter ① and valve pad ② so that they can be installed in their original positions.

4. Check the valve pad number ⓐ.

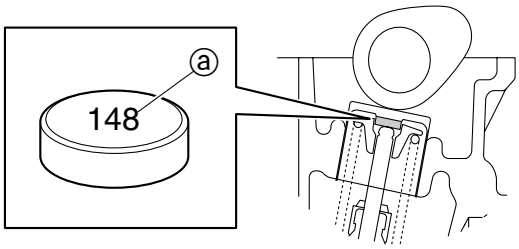

TIP:

The thickness of each valve pad is marked in hundredths of millimeters on the side that contacts the valve lifter.

5. Round off the original valve pad number according to the following table.

Last digit	Rounded value
0, 1, 2	0
4, 5, 6	5
8, 9	10

6. Select the new valve pad number from the “Valve pad selection table” (5-70).

TIP:
The valve pads are available in 25 thicknesses, ranging from 1.20 mm to 2.40 mm in 0.05 mm increments.

7. Install the selected valve pad ② and valve lifter ①.

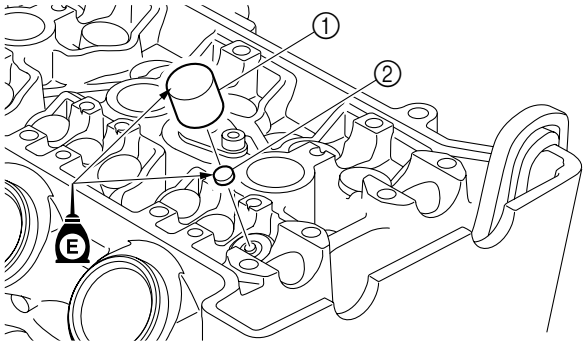

8. Turn the valve lifter.

TIP:
Make sure that the valve lifter turns smoothly.

9. Install the camshafts and camshaft caps. See “Camshaft installation” (5-65).

10. Make sure that piston #1 is at TDC.

11. Measure the intake and exhaust valve clearances of the specified cylinders.

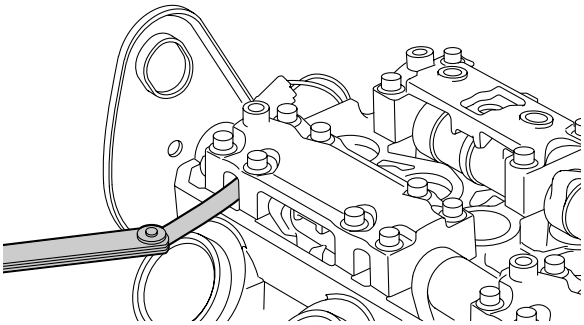

	#1	#2	#3	#4
IN	○		○	
EX	○	○		

○ : Specified cylinder

12. Install the dial gauge needle and special service tools and into spark plug hole #4.

13. Position piston #4 at TDC by turning the exhaust camshaft sprocket counterclockwise.

14. Measure the intake and exhaust valve clearances of the specified cylinders.

	#1	#2	#3	#4
IN		○		○
EX			○	○

○ : Specified cylinder

Valve pad selection table

Intake

MEASURED CLEARANCE	ORIGINAL VALVE PAD NUMBER																								
	120	125	130	135	140	145	150	155	160	165	170	175	180	185	190	195	200	205	210	215	220	225	230	235	240
0.00–0.02				120	125	130	135	140	145	150	155	160	165	170	175	180	185	190	195	200	205	210	215	220	225
0.03–0.07			120	125	130	135	140	145	150	155	160	165	170	175	180	185	190	195	200	205	210	215	220	225	230
0.08–0.10		120	125	130	135	140	145	150	155	160	165	170	175	180	185	190	195	200	205	210	215	220	225	230	235
0.11–0.20	STANDARD CLEARANCE																								
0.21–0.22	125	130	135	140	145	150	155	160	165	170	175	180	185	190	195	200	205	210	215	220	225	230	235	240	
0.23–0.27	130	135	140	145	150	155	160	165	170	175	180	185	190	195	200	205	210	215	220	225	230	235	240		
0.28–0.32	135	140	145	150	155	160	165	170	175	180	185	190	195	200	205	210	215	220	225	230	235	240			
0.33–0.37	140	145	150	155	160	165	170	175	180	185	190	195	200	205	210	215	220	225	230	235	240				
0.38–0.42	145	150	155	160	165	170	175	180	185	190	195	200	205	210	215	220	225	230	235	240					
0.43–0.47	150	155	160	165	170	175	180	185	190	195	200	205	210	215	220	225	230	235	240						
0.48–0.52	155	160	165	170	175	180	185	190	195	200	205	210	215	220	225	230	235	240							
0.53–0.57	160	165	170	175	180	185	190	195	200	205	210	215	220	225	230	235	240								
0.58–0.62	165	170	175	180	185	190	195	200	205	210	215	220	225	230	235	240									
0.63–0.67	170	175	180	185	190	195	200	205	210	215	220	225	230	235	240										
0.68–0.72	175	180	185	190	195	200	205	210	215	220	225	230	235	240											
0.73–0.77	180	185	190	195	200	205	210	215	220	225	230	235	240												
0.78–0.82	185	190	195	200	205	210	215	220	225	230	235	240													
0.83–0.87	190	195	200	205	210	215	220	225	230	235	240														
0.88–0.92	195	200	205	210	215	220	225	230	235	240															
0.93–0.97	200	205	210	215	220	225	230	235	240																
0.98–1.02	205	210	215	220	225	230	235	240																	
1.03–1.07	210	215	220	225	230	235	240																		
1.08–1.12	215	220	225	230	235	240																			
1.13–1.17	220	225	230	235	240																				
1.18–1.22	225	230	235	240																					
1.23–1.27	230	235	240																						
1.28–1.32	235	240																							
1.33–1.37	240																								

Example:
Measured valve clearance is 0.24 mm (0.0094 in)
Original valve pad number is 148 (thickness = 1.48 mm)
Round off the original valve pad number 148 to 150 (thickness = 1.50 mm).
Select the new valve pad number using the valve pad selection table.
New valve pad number is 160 (thickness = 1.60 mm)

Exhaust

MEASURED CLEARANCE	ORIGINAL VALVE PAD NUMBER																								
	120	125	130	135	140	145	150	155	160	165	170	175	180	185	190	195	200	205	210	215	220	225	230	235	240
0.00–0.01							120	125	130	135	140	145	150	155	160	165	170	175	180	185	190	195	200	205	210
0.02–0.06						120	125	130	135	140	145	150	155	160	165	170	175	180	185	190	195	200	205	210	215
0.07–0.11					120	125	130	135	140	145	150	155	160	165	170	175	180	185	190	195	200	205	210	215	220
0.12–0.16				120	125	130	135	140	145	150	155	160	165	170	175	180	185	190	195	200	205	210	215	220	225
0.17–0.21			120	125	130	135	140	145	150	155	160	165	170	175	180	185	190	195	200	205	210	215	220	225	230
0.22–0.24		120	125	130	135	140	145	150	155	160	165	170	175	180	185	190	195	200	205	210	215	220	225	230	235
0.25–0.34	STANDARD CLEARANCE																								
0.35–0.37	125	130	135	140	145	150	155	160	165	170	175	180	185	190	195	200	205	210	215	220	225	230	235	240	
0.38–0.42	130	135	140	145	150	155	160	165	170	175	180	185	190	195	200	205	210	215	220	225	230	235	240		
0.43–0.47	135	140	145	150	155	160	165	170	175	180	185	190	195	200	205	210	215	220	225	230	235	240			
0.48–0.52	140	145	150	155	160	165	170	175	180	185	190	195	200	205	210	215	220	225	230	235	240				
0.53–0.57	145	150	155	160	165	170	175	180	185	190	195	200	205	210	215	220	225	230	235	240					
0.58–0.62	150	155	160	165	170	175	180	185	190	195	200	205	210	215	220	225	230	235	240						
0.63–0.67	155	160	165	170	175	180	185	190	195	200	205	210	215	220	225	230	235	240							
0.68–0.72	160	165	170	175	180	185	190	195	200	205	210	215	220	225	230	235	240								
0.73–0.77	165	170	175	180	185	190	195	200	205	210	215	220	225	230	235	240									
0.78–0.82	170	175	180	185	190	195	200	205	210	215	220	225	230	235	240										
0.83–0.87	175	180	185	190	195	200	205	210	215	220	225	230	235	240											
0.88–0.92	180	185	190	195	200	205	210	215	220	225	230	235	240												
0.93–0.97	185	190	195	200	205	210	215	220	225	230	235	240													
0.98–1.02	190	195	200	205	210	215	220	225	230	235	240														
1.03–1.07	195	200	205	210	215	220	225	230	235	240															
1.08–1.12	200	205	210	215	220	225	230	235	240																
1.13–1.17	205	210	215	220	225	230	235	240																	
1.18–1.22	210	215	220	225	230	235	240																		
1.23–1.27	215	220	225	230	235	240																			
1.28–1.32	220	225	230	235	240																				
1.33–1.37	225	230	235	240																					
1.38–1.42	230	235	240																						
1.43–1.47	235	240																							
1.48–1.52	240																								

Example:
Measured valve clearance is 0.44 mm (0.0173 in)
Original valve pad number is 168 (thickness = 1.68 mm)
Round off the original valve pad number 168 to 170 (thickness = 1.70 mm).
Select the new valve pad number using the valve pad selection table.
New valve pad number is 185 (thickness = 1.85 mm)

Cylinder head cover assembly

1. Install the cover ① and rubber seal ②.

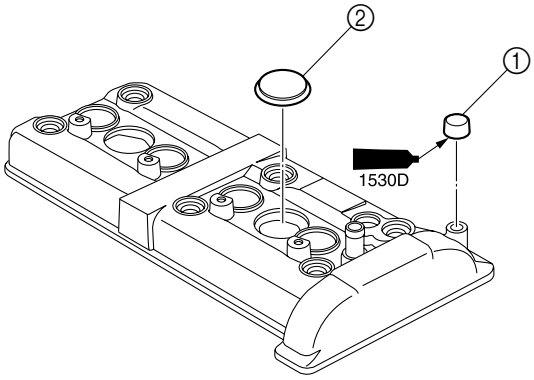

2. Install the timing chain guide (top side) ③.

3. Install a new cylinder head cover gasket ④, and then cut the portions ⓐ and ⓑ. ***NOTICE:*** **Do not reuse a gasket, always replace it with a new one.**

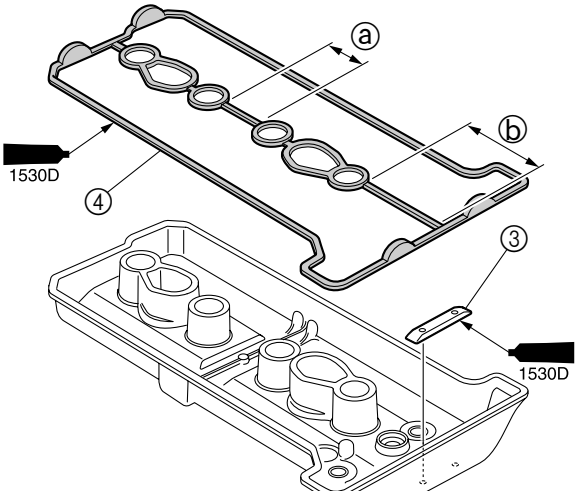

Cylinder head cover installation

1. Apply sealant onto the locations ⓐ of the cylinder head cover gasket ①.

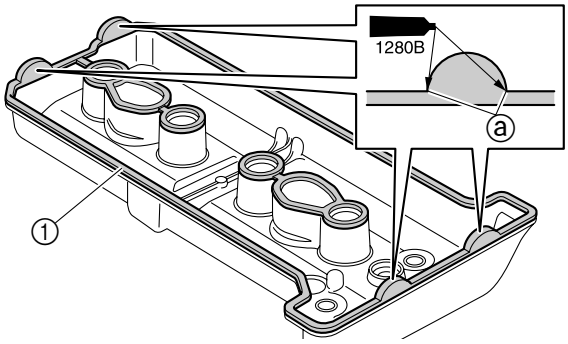

2. Install the cylinder head cover ② and rubber mounts ③, and then tighten the bolts ④ to the specified torque in a criss-cross pattern.

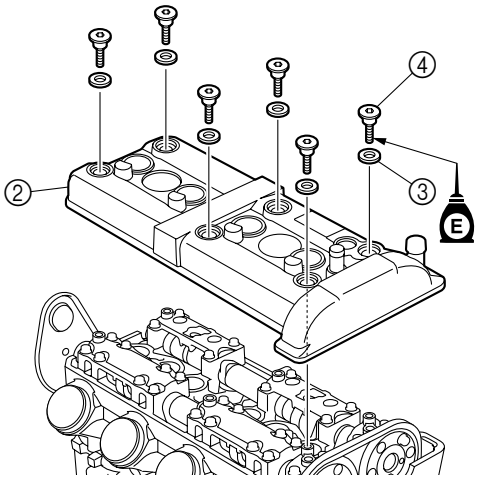

Cylinder head cover bolt ④: 12 N·m (1.2 kgf·m, 8.9 ft·lb)

3. Tighten the spark plugs ⑤ to the specified torque.

4. Install the ignition coils ⑥, and then tighten the bolts ⑦ to the specified torque.

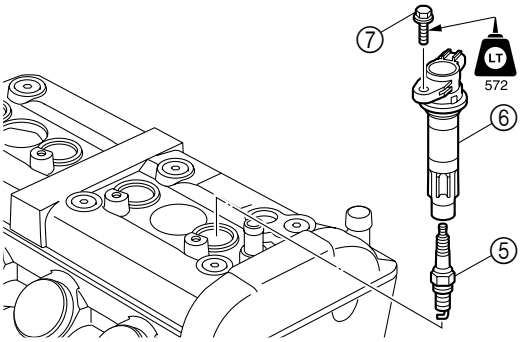

Spark plug ⑤: 13 N·m (1.3 kgf·m, 9.6 ft·lb) Ignition coil bolt ⑦: 8 N·m (0.8 kgf·m, 5.9 ft·lb)

5. Install the cooling water pipe ⑧ and a new O-ring ⑨, and then tighten the bolt ⑩ to the specified torques in 2 stages. ***NOTICE:*** **Do not reuse an O-ring, always replace it with a new one.**

6. Install the rubber seal ⑪.

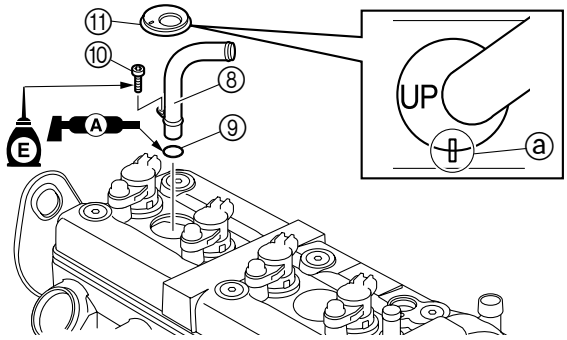

Cooling water pipe bolt ⑩: 1st: 4 N·m (0.4 kgf·m, 3.0 ft·lb) 2nd: 8 N·m (0.8 kgf·m, 5.9 ft·lb)

TIP:

Align the alignment marks ⓐ on the rubber seal ⑪ and cylinder head cover.

7. Install the cam position sensor ⑫, and then tighten the bolt ⑬ to the specified torque.

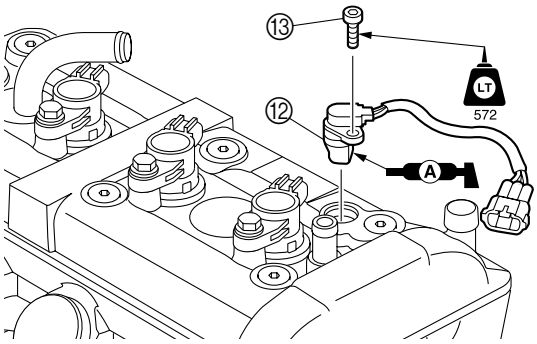

Cam position sensor bolt ⑬: 10 N·m (1.0 kgf·m, 7.4 ft·lb)

5

Cylinder head

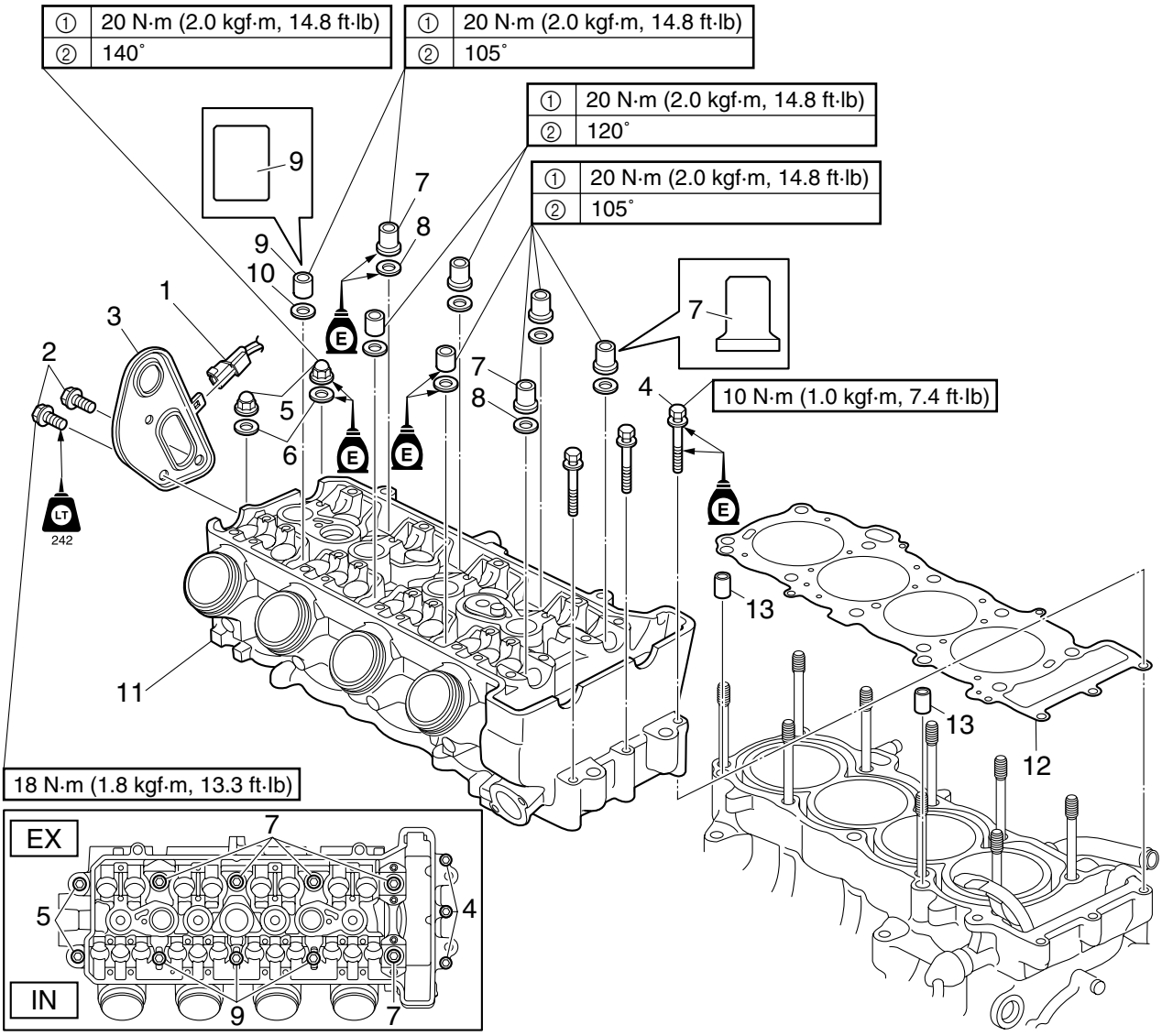

No.	Part name	Q'ty	Remarks
1	Thermoswitch (engine) coupler	1	
2	Bolt	2	M8 × 20 mm
3	Engine hanger	1	
4	Bolt	3	M6 × 55 mm
5	Nut	2	
6	Washer	2	
7	Nut	5	
8	Washer	5	
9	Nut	3	
10	Washer	3	
11	Cylinder head assy.	1	
12	Gasket	1	**Not reusable**
13	Dowel pin	2	

Valve and valve spring

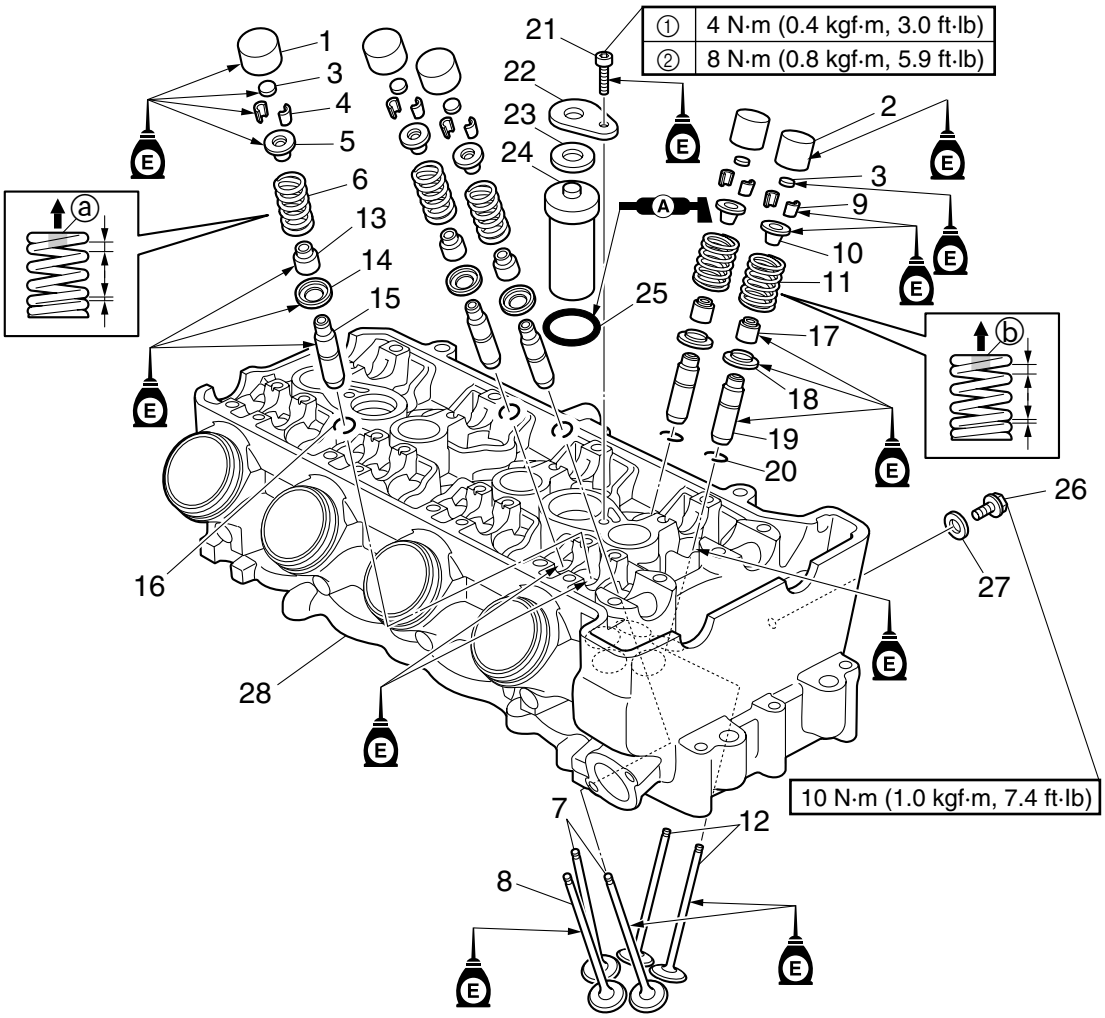

No.	Part name	Q'ty	Remarks
1	Intake valve lifter	12	
2	Exhaust valve lifter	8	
3	Valve pad	20	
4	Intake valve cotter	24	
5	Intake upper spring seat	12	
6	Intake valve spring	12	ⓐ Green paint mark
7	Intake valve	8	
8	Intake valve (middle)	4	
9	Exhaust valve cotter	16	
10	Exhaust upper spring seat	8	
11	Exhaust valve spring	8	ⓑ Brown paint mark
12	Exhaust valve	8	
13	Intake valve seal	12	**Not reusable**
14	Intake lower spring seat	12	
15	Intake valve guide	12	**Not reusable**
16	Circlip	12	**Not reusable**

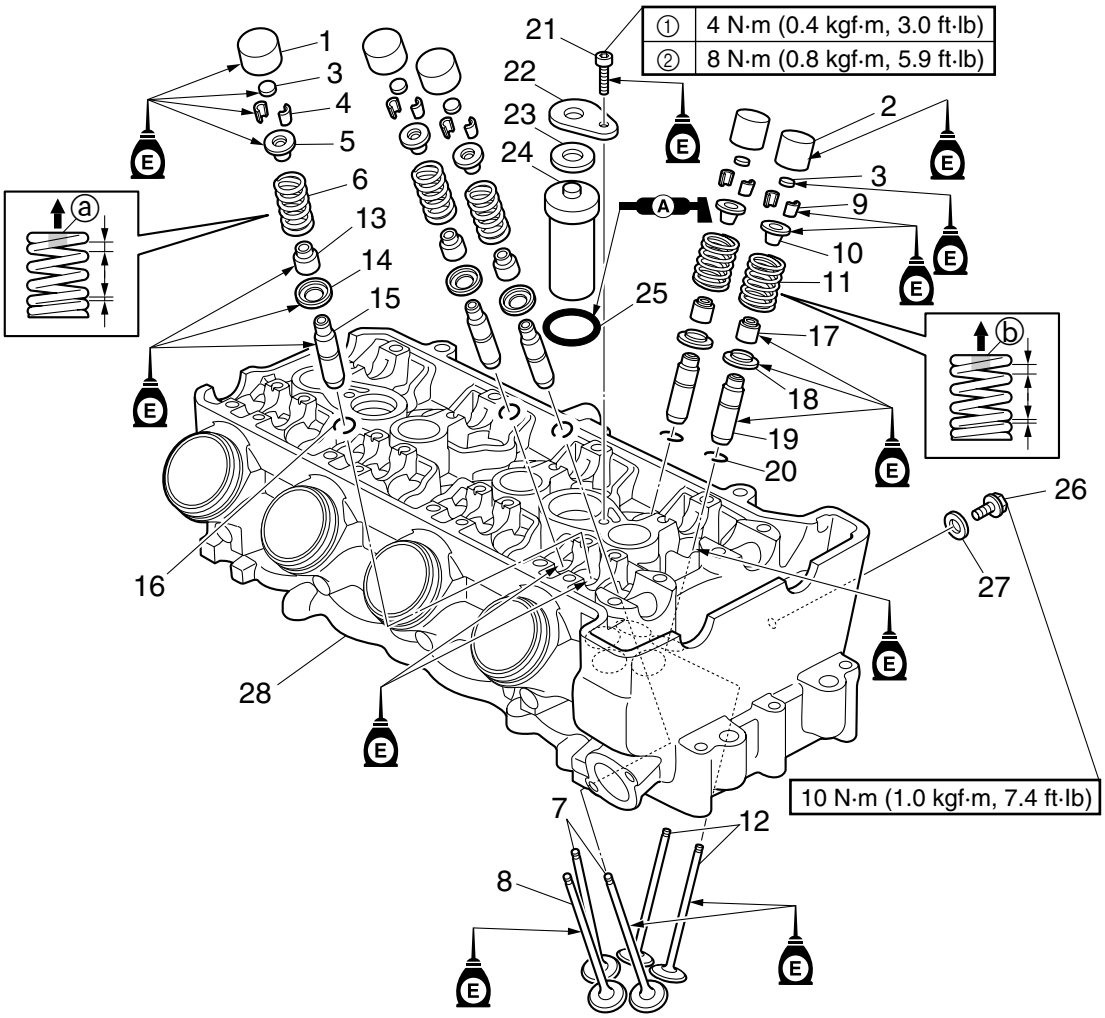

No.	Part name	Q'ty	Remarks
17	Exhaust valve seal	8	**Not reusable**
18	Exhaust lower spring seat	8	
19	Exhaust valve guide	8	**Not reusable**
20	Circlip	8	**Not reusable**
21	Bolt	1	M6 × 16 mm
22	Plate	1	
23	Gasket	1	**Not reusable**
24	Pipe	1	
25	O-ring	1	**Not reusable**
26	Bolt	1	M6 × 12 mm
27	Gasket	1	**Not reusable**
28	Cylinder head	1	

Cylinder head assy. removal

1. Remove the thermoswitch (engine) coupler ⓐ and engine hanger ①.

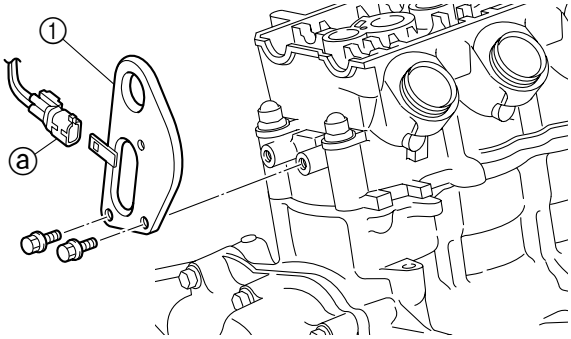

2. Remove the cylinder head bolts ②, and then loosen the nuts ③, ④, and ⑤ in the order [1], [2], and so on.

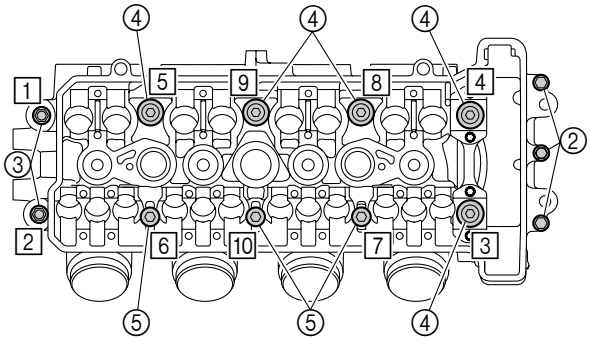

3. Remove the cylinder head assy. ⑥, gasket ⑦, and dowel pins ⑧.

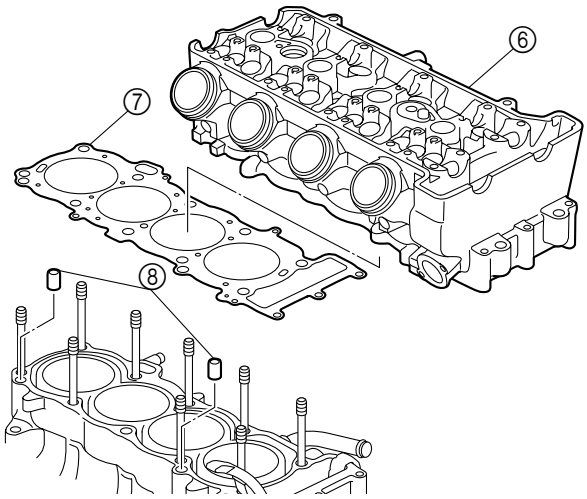

Cylinder head disassembly

1. Remove the valve lifters ① and valve pads ②.

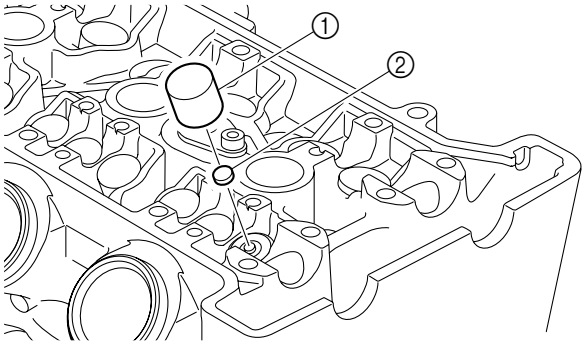

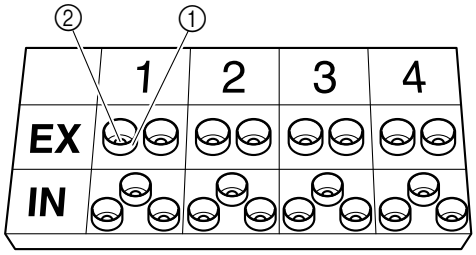

TIP:

Make a note of the position of each valve lifter ① and valve pad ② so that they can be installed in their original positions.

2. Remove the intake valves and exhaust valves.

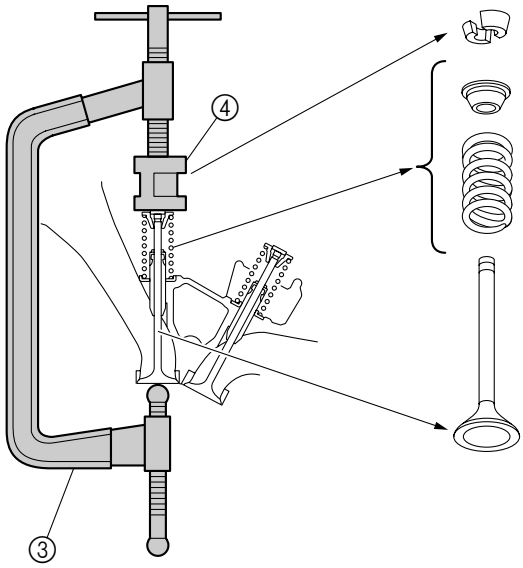

5

Valve spring compressor ③:
YM-04019/90890-04019
Compressor adapter ④:
Intake: YM-04114
Exhaust: YM-04108
Valve spring compressor attachment ④:
Intake: 90890-04114
Exhaust: 90890-04108

TIP:
Make a note of the position of each valve, spring, and other parts so that they can be installed in their original positions.

3. Remove the valve seals ⑤ and lower spring seats ⑥.

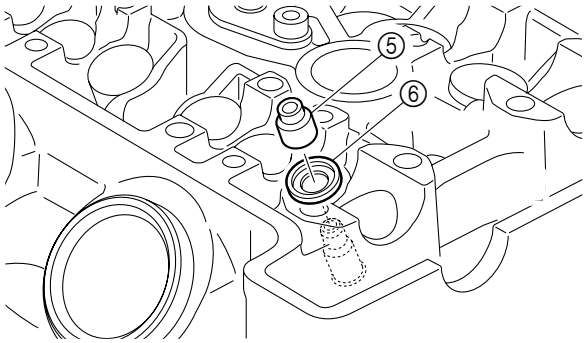

4. Remove the plate ⑦, gasket ⑧, pipe ⑨, and O-ring ⑩.

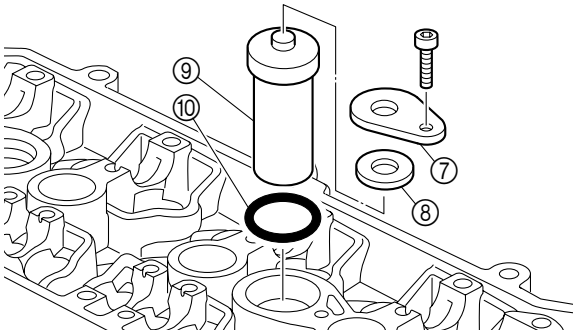

Cylinder head check

1. Eliminate carbon deposits from the combustion chambers.
2. Check the cylinder head. Replace if damaged or eroded.
3. Check the cylinder head water jacket. Eliminate if mineral deposits and rust.
4. Check the cylinder head warpage using a straightedge ① and thickness gauge ② in the directions shown. Replace if out of specification.

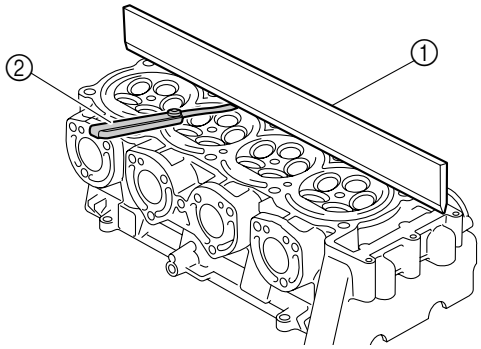

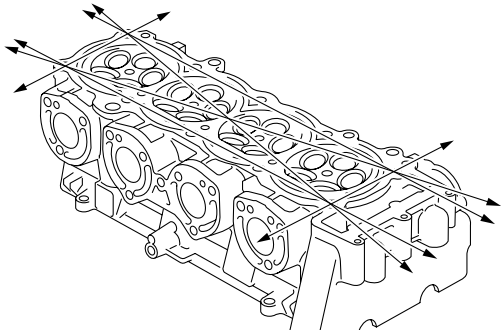

Cylinder head warpage limit:
0.10 mm (0.0039 in)

Valve spring check

1. Measure the valve spring free length ⓐ. Replace if out of specification.

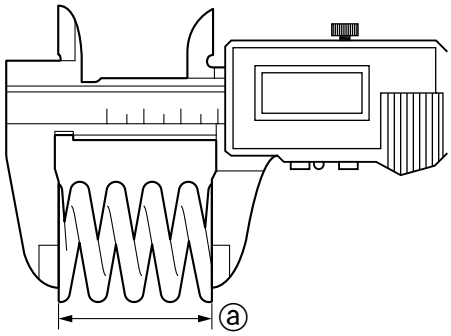

Valve spring free length ⓐ:
Intake: 38.90 mm (1.531 in)
Exhaust: 40.67 mm (1.601 in)

2. Measure the valve spring tilt ⓑ. Replace if out of specification.

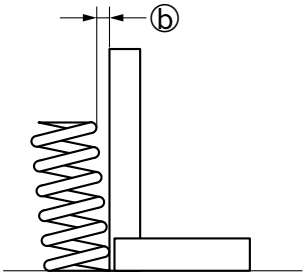

Valve spring tilt limit ⓑ: Intake: 1.70 mm (0.067 in) Exhaust: 1.80 mm (0.071 in)

Valve check

TIP:

To ensure accurate measurements, make sure to clean the valves before measuring them.

1. Check the valve face. Replace if pitted.
2. Measure the valve face width ⓐ. Replace if out of specification.

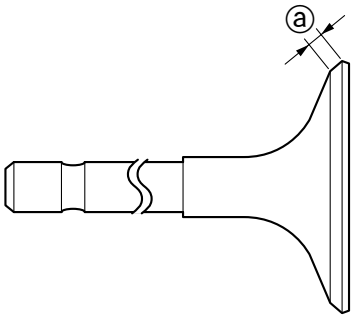

Valve face width ⓐ: Intake and exhaust: 1.909–2.616 mm (0.0752–0.1030 in)

3. Measure the valve margin thickness ⓑ. Replace if out of specification.

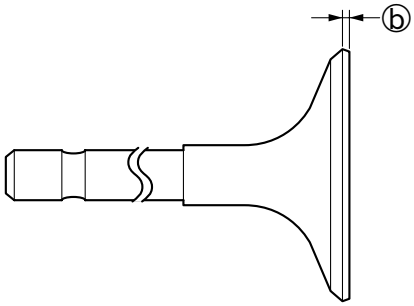

Valve margin thickness ⓑ: Intake and exhaust: 0.700 mm (0.0276 in)

4. Measure the valve stem diameter ⓒ. Replace if out of specification.

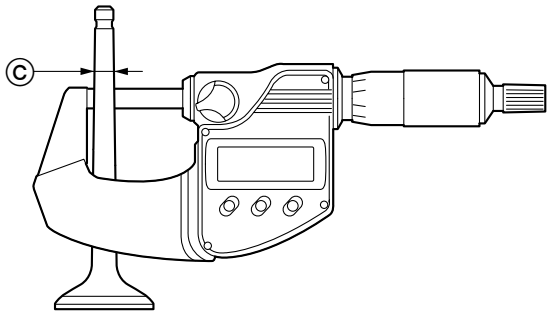

Valve stem diameter ⓒ: Intake: 3.975–3.990 mm (0.1565–0.1571 in) Exhaust: 4.465–4.480 mm (0.1758–0.1764 in)

5. Measure the valve stem runout. Replace if out of specification.

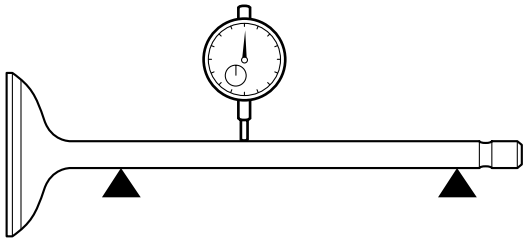

Valve stem runout limit: Intake and exhaust: 0.01 mm (0.0004 in)

Valve guide check

1. Measure the valve guide inside diameter ⓐ.

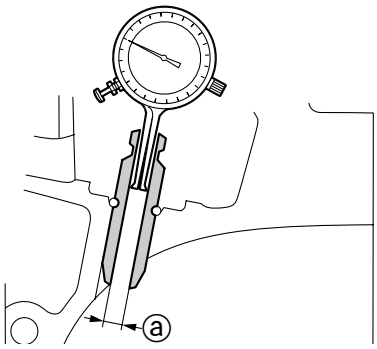

Valve guide inside diameter ⓐ: Intake: 4.000–4.012 mm (0.1575–0.1580 in) Exhaust: 4.500–4.512 mm (0.1772–0.1776 in)

2. Calculate the valve-stem-to-valve-guide clearance. Replace the valve and valve guide if out of specification.

Valve-stem-to-valve-guide clearance = valve guide inside diameter – valve stem diameter: Intake: 0.010–0.037 mm (0.0004–0.0015 in) Exhaust: 0.020–0.047 mm (0.0008–0.0019 in)

Valve guide removal

1. Insert the special service tool ① into the combustion chamber side of the valve guide ②.

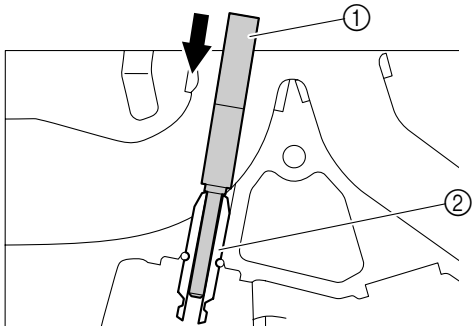

Valve guide driver ①: Intake: YM-04111 Exhaust: YM-04116 Valve guide remover 4.0 ①: Intake: 90890-04111 Valve guide remover 4.5 ①: Exhaust: 90890-04116

2. Strike the special service tool ① to drive the valve guide ② out of the cylinder head.

Valve guide installation

1. Install a new valve guide ① by striking the special service tool ② from the camshaft side until the circlip ③ contacts the cylinder head. ***NOTICE:*** **Do not reuse a circlip or valve guide, always replace it with a new one**.

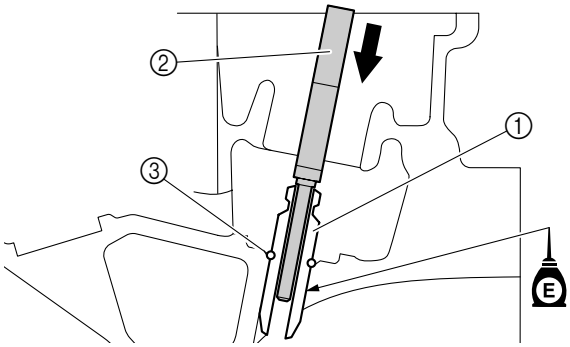

Valve guide driver ②: Intake: YM-04111 Exhaust: YM-04116 Valve guide remover 4.0 ②: Intake: 90890-04111 Valve guide remover 4.5 ②: Exhaust: 90890-04116

2. Insert the special service tool ④ into the valve guide ①, and then ream the valve guide ①.

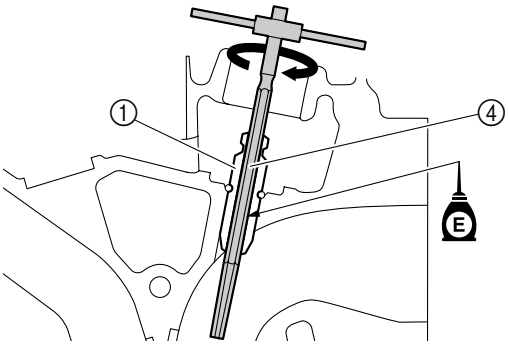

Valve guide reamer ④:
Intake: YM-04113/90890-04113
Exhaust: YM-04118/90890-04118

TIP:
- Turn the special service tool ④ clockwise to ream the valve guide.
- Do not turn the special service tool ④ counterclockwise when removing the tool.

3. Clean the valve guide inner surface.

4. Measure the valve guide inside diameter ⓐ.

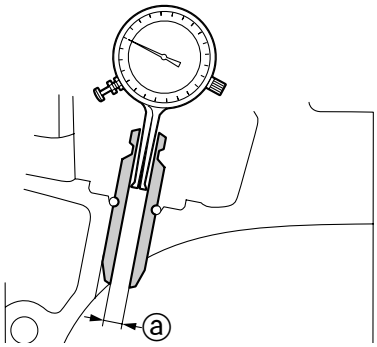

Valve guide inside diameter ⓐ:
Intake:
4.000–4.012 mm (0.1575–0.1580 in)
Exhaust:
4.500–4.512 mm (0.1772–0.1776 in)

Valve seat check

1. Eliminate carbon deposits from the valves and valve seats.

2. Apply a thin, even layer of Mechanic's blueing dye (Dykem) onto the valve seat.

3. Press the valve lightly against the valve seat with a valve lapper ① (commercially available).

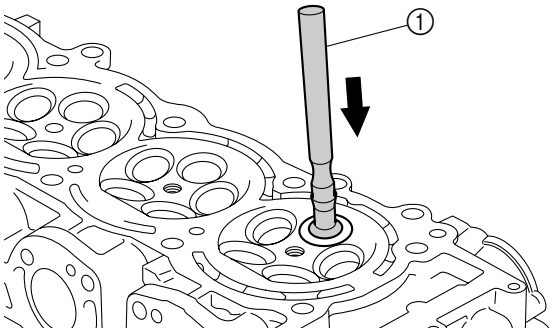

4. Measure the valve seat contact width ⓐ where the blueing dye is adhered to the valve face. Reface the valve seat if the valve is not seated properly or if the valve seat contact width ⓐ is out of specification. Replace the valve guide if the valve seat contact width ⓐ is uneven.

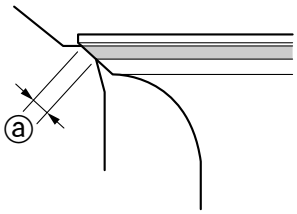

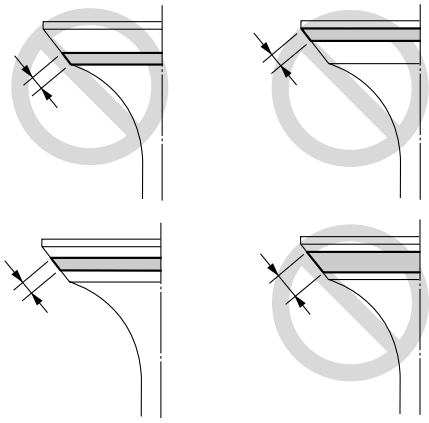

Valve seat contact width ⓐ:
Intake and exhaust:
0.900–1.100 mm (0.0354–0.0433 in)

Valve seat refacing

NOTICE

Do not over cut the valve seat. To prevent chatter marks, make sure to turn the cutter evenly using a downward force of 40–50 N·m (4–5 kgf·m, 8.8–11 ft·lb).

1. Reface the valve seat.

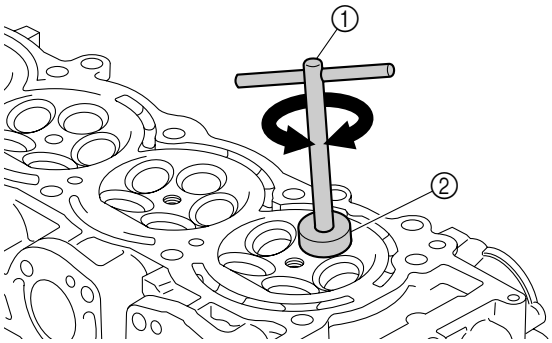

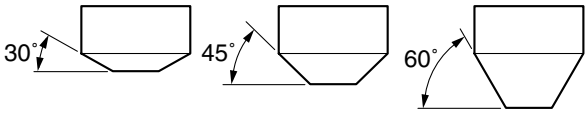

Neway valve seat kit: YB-91044 Valve seat cutter holder ①: Intake (ø4.0 mm): 90890-06811 Exhaust (ø4.5 mm): 90890-06812 Valve seat cutter ②: 30° (intake): 90890-06815 45° (intake): 90890-06814 60° (intake): 90890-06813 30° (exhaust): 90890-06328 45° (exhaust): 90890-06312 60° (exhaust): 90890-06315

TIP:

Do not turn the special service tool counterclockwise when refacing the valve seat.

2. Cut the surface of the valve seat using a 45° cutter by turning the cutter clockwise until the valve seat face has become smooth.

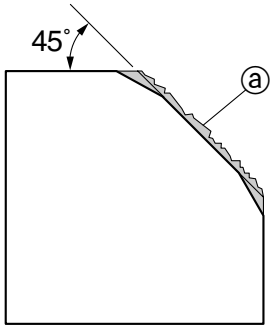

ⓐ Slag or rough surface

3. Adjust the top edge of the valve seat contact width using a 30° cutter.

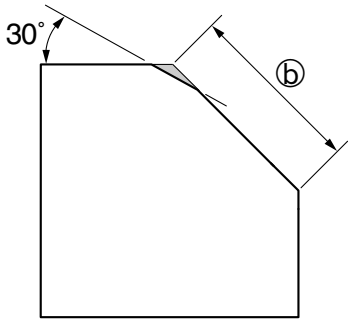

ⓑ Previous contact width

4. Adjust the bottom edge of the valve seat contact width using a 60° cutter.

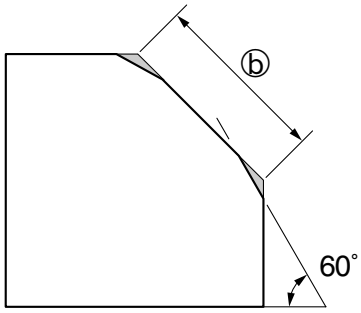

ⓑ Previous contact width

5. Adjust the valve seat contact width to specification using a 45° cutter.

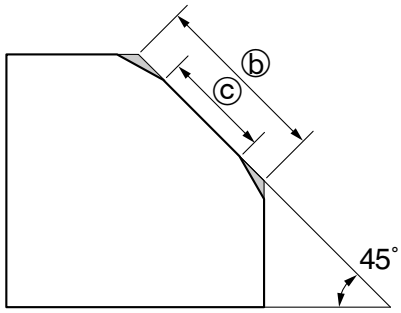

ⓑ Previous contact width
ⓒ Specified contact width

6. Check the valve seat contact area of the valve. See “Valve seat check” (5-80).

Example:

- If the valve seat contact width is too wide and situated in the center of the valve face, cut the top edge of the valve seat using a 30° cutter, and then cut the bottom edge using a 60° cutter to center the area and set its width.

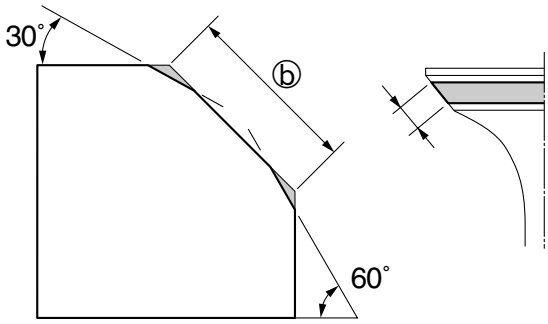

ⓑ Previous contact width

- If the valve seat contact width is too narrow and situated near the top edge of the valve face, cut the top edge of the valve seat using a 30° cutter to center the area, and then set its width using a 45° cutter.

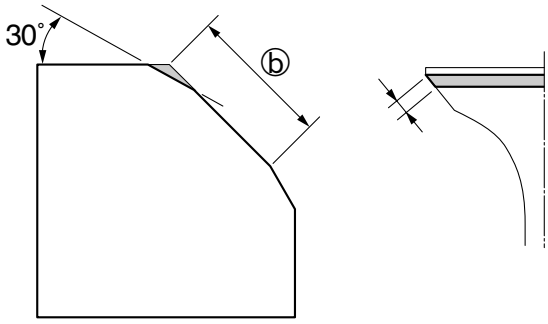

ⓑ Previous contact width

- If the valve seat contact width is too narrow and situated near the bottom edge of the valve face, cut the bottom edge of the valve seat using a 60° cutter to center the area, and then set its width using a 45° cutter.

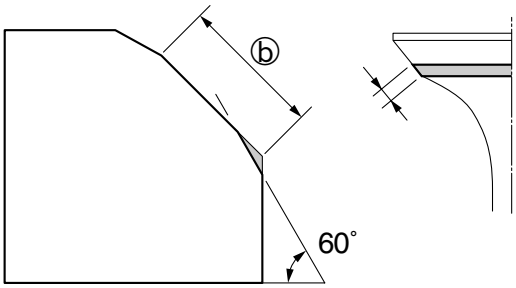

ⓑ Previous contact width

7. After refacing the valve seat to the specified contact width, apply a thin, even layer of lapping compound onto the valve seat, and then lap the valve using a valve lapper ③ (commercially available). ***NOTICE:*** **Do not get the lapping compound on the valve stem and valve guide**.

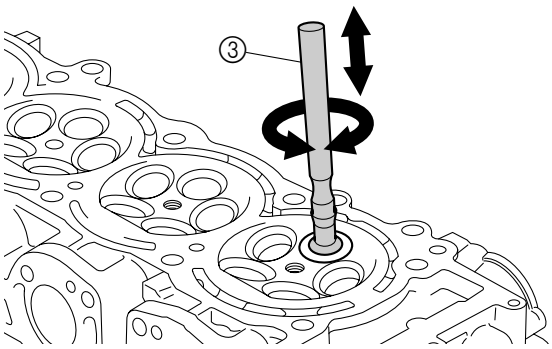

8. After every lapping procedure, be sure to clean off any remaining lapping compound from the cylinder head and the valves.

9. Check the valve seat contact area of the valve again. See “Valve seat check” (5-80).

TIP:

After refacing the valve seat, check that the valve clearance is within specification. See “Valve clearance measurement” (3-8).

Cylinder head assembly

NOTICE

Do not reuse a gasket, O-ring, or valve seal, always replace it with a new one.

1. Install a new O-ring ①, the pipe ②, a new gasket ③, and the plate ④, and then tighten the bolt ⑤ to the specified torques in 2 stages.

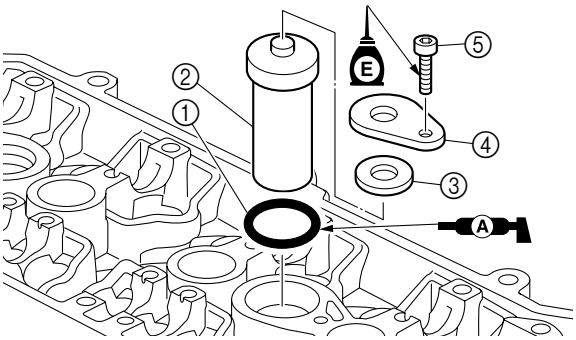

Plate bolt ⑤: 1st: 4 N·m (0.4 kgf·m, 3.0 ft·lb) 2nd: 8 N·m (0.8 kgf·m, 5.9 ft·lb)

2. Install the lower spring seat ⑥, and then a new valve seal ⑦ onto the valve guide.

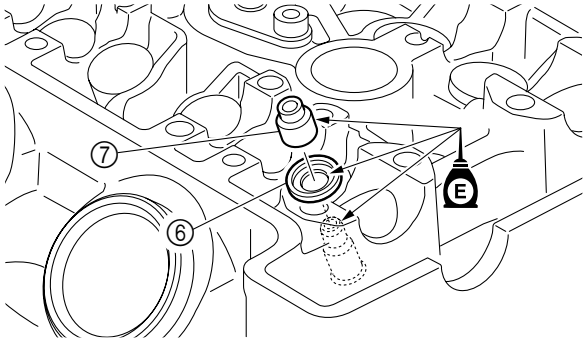

3. Install the valve ⑧, valve spring ⑨, and upper spring seat ⑩, and then attach the special service tools ⑪ and ⑫.

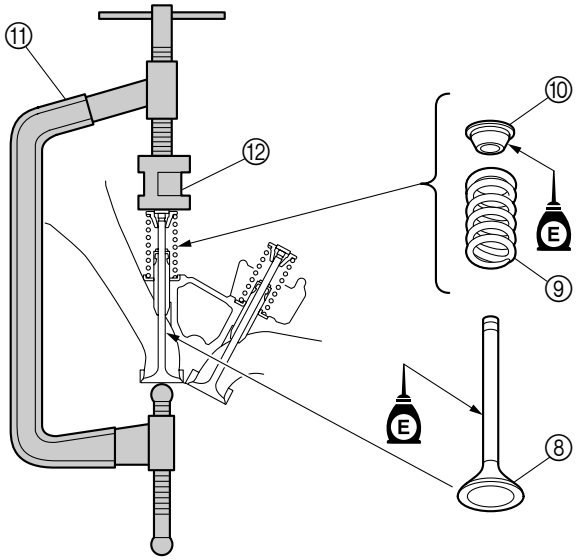

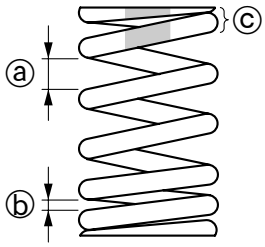

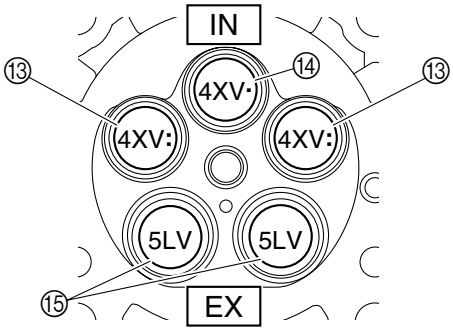

Valve spring compressor ⑪: YM-04019/90890-04019 Compressor adapter ⑫: Intake: YM-04114 Exhaust: YM-04108 Valve spring compressor attachment ⑫: Intake: 90890-04114 Exhaust: 90890-04108

TIP:

- When installing a new valve, always replace the valve guide and valve seal with new ones.
- When installing a new valve, see the following embossed marks.
  Right and left intake valve(s) ⑬: “4XV:”
  Middle intake valve(s) ⑭: “4XV·”
  Exhaust valve(s) ⑮: “5LV”
- Install the valve spring with the larger pitch ⓐ toward the camshaft and the smaller pitch ⓑ toward the combustion chamber.
- The upper end ⓒ of the intake valve spring with the larger pitch is painted green.
- The upper end ⓒ of the exhaust valve spring with the larger pitch is painted brown.

4. Compress the valve spring ⑨, and then install the valve cotters ⑯.

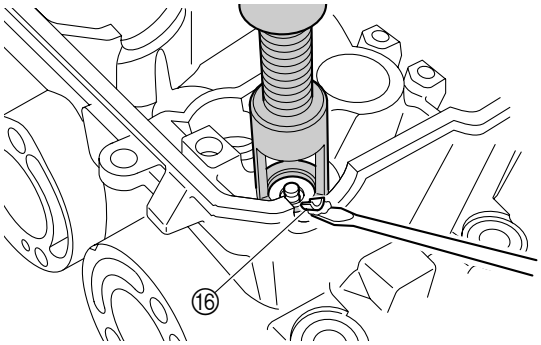

5. Lightly tap the upper spring seat ⑩ with a plastic hammer to set the valve cotters ⑯ securely.

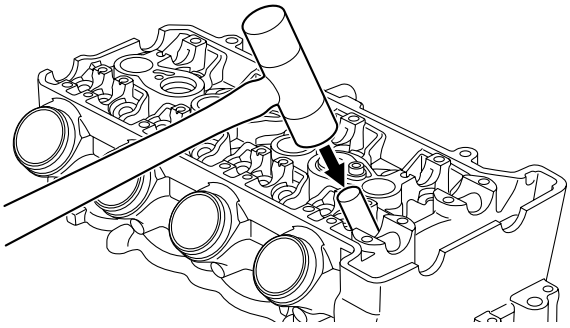

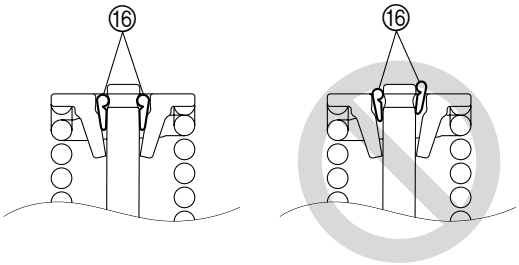

6. Install the valve pads ⑰ and valve lifter ⑱ in their original positions.

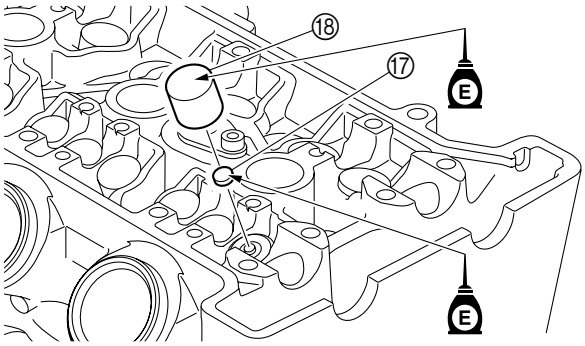

Cylinder head installation

1. Pass the timing chain ① and timing chain guide (intake side) ② through the timing chain cavity.

2. Install the dowel pins ③, a new gasket ④, and the cylinder head assy. ⑤.
   NOTICE: **Do not reuse a gasket, always replace it with a new one.**

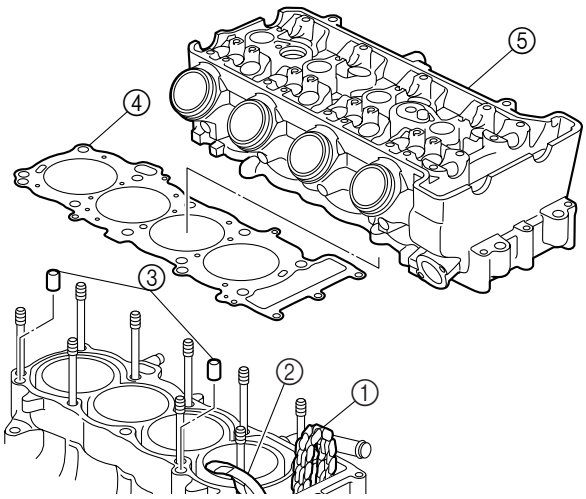

3. Tighten the cylinder head nuts ⑥, ⑦, and ⑧ to the specified torques in 2 stages and in the order [1], [2], and so on.

4. Tighten the cylinder head bolts ⑨ to the specified torques.

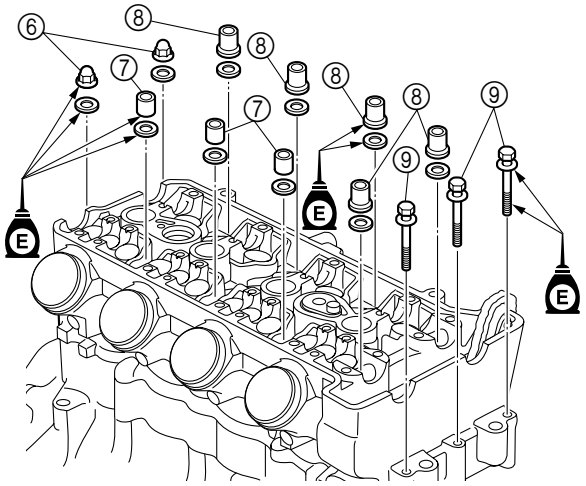

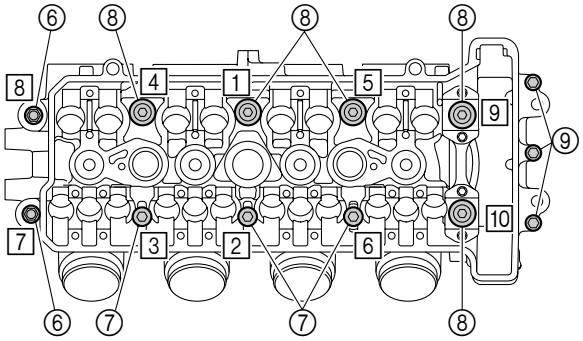

Cylinder head nut 1, 2:
1st: 20 N·m (2.0 kgf·m, 14.8 ft·lb)
2nd: 120°
Cylinder head nut 3, 4, 5, 6, 9, 10:
1st: 20 N·m (2.0 kgf·m, 14.8 ft·lb)
2nd: 105°
Cylinder head nut 7, 8:
1st: 20 N·m (2.0 kgf·m, 14.8 ft·lb)
2nd: 140°
Cylinder head bolt ⑨:
10 N·m (1.0 kgf·m, 7.4 ft·lb)

TIP:
Use a commercially available angle gauge to tighten the nuts to the specified angle.

5. Install the engine hanger ⑩, and then tighten the bolts ⑪ to the specified torque.

6. Install the thermoswitch (engine) coupler ⓐ.

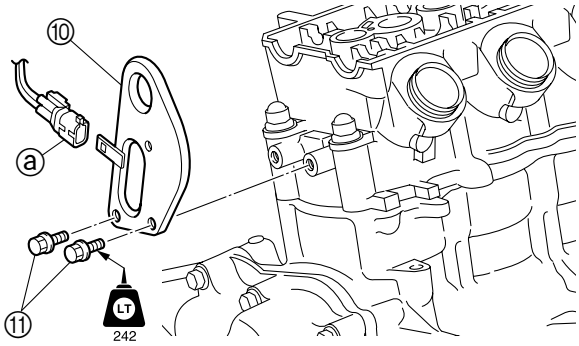

Engine hanger bolt ⑪:
18 N·m (1.8 kgf·m, 13.3 ft·lb)

Generator cover assy. and flywheel magneto

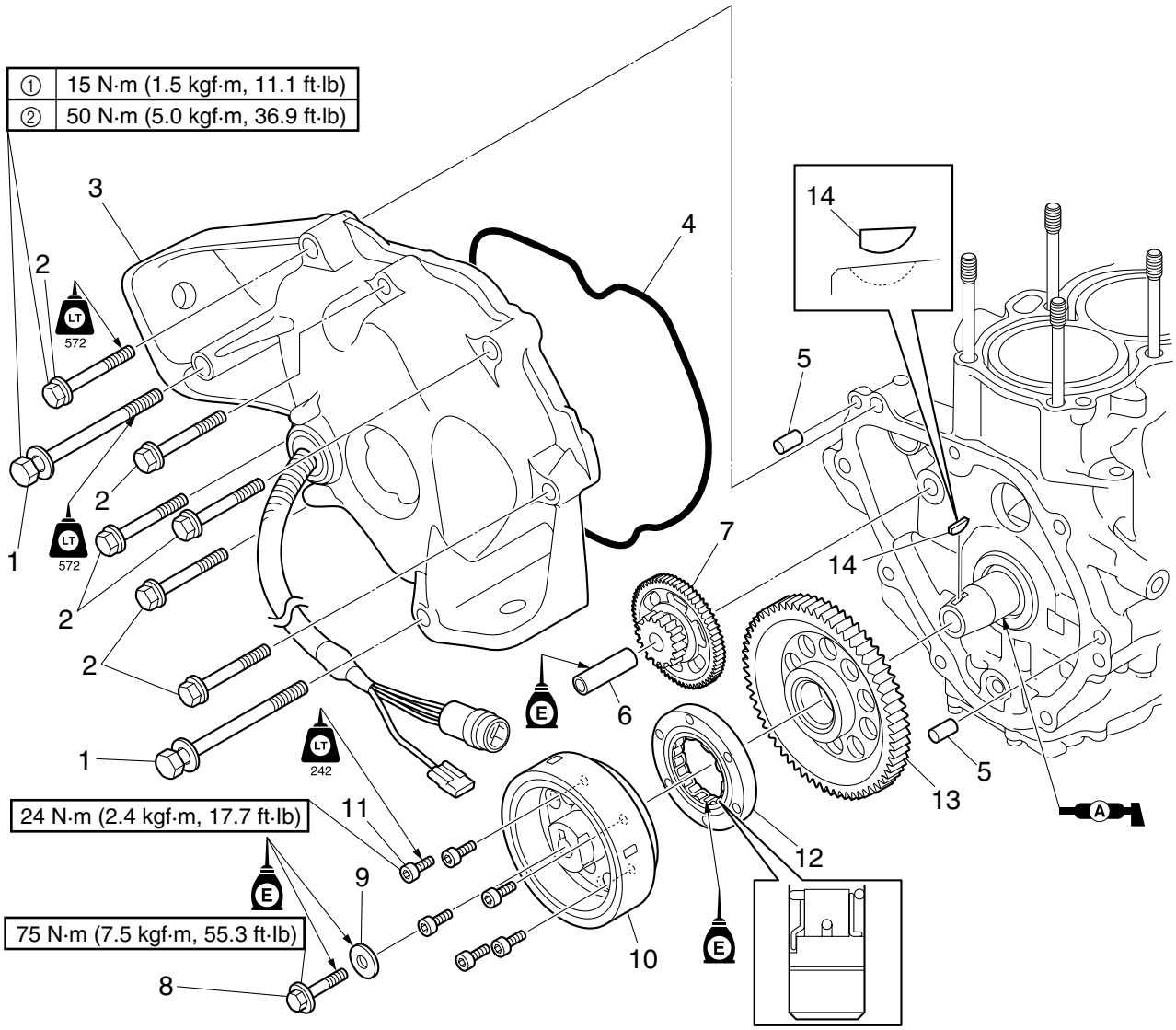

No.	Part name	Q'ty	Remarks
1	Bolt	2	M10 × 135 mm
2	Bolt	6	M10 × 60 mm
3	Generator cover assy.	1	
4	Gasket	1	**Not reusable**
5	Dowel pin	2	
6	Idle gear shaft	1	
7	Idle gear	1	
8	Bolt	1	**Not reusable** M10 × 47 mm
9	Washer	1	**Not reusable**
10	Flywheel magneto	1	
11	Bolt	6	M8 × 20 mm
12	Starter clutch	1	
13	Starter gear	1	
14	Woodruff key	1	

Generator cover

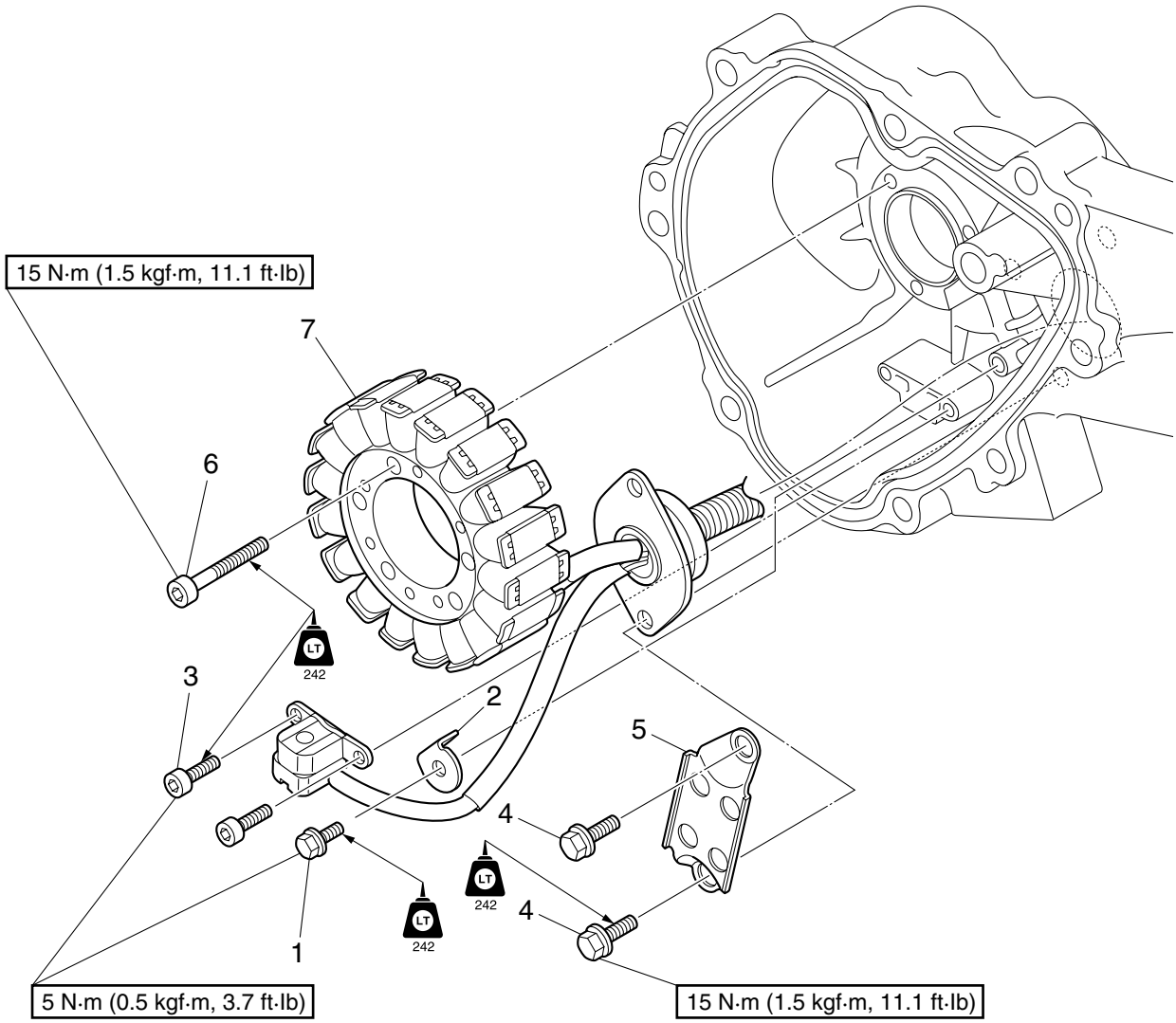

No.	Part name	Q'ty	Remarks
1	Bolt	1	M5 × 10 mm
2	Washer	1	
3	Bolt	2	M5 × 14 mm
4	Bolt	2	M6 × 14 mm
5	Holder	1	
6	Bolt	3	M6 × 35 mm
7	Stator coil assy.	1	

Generator cover assy. removal

1. Remove the generator cover assy. ①, gasket ②, and dowel pins ③.

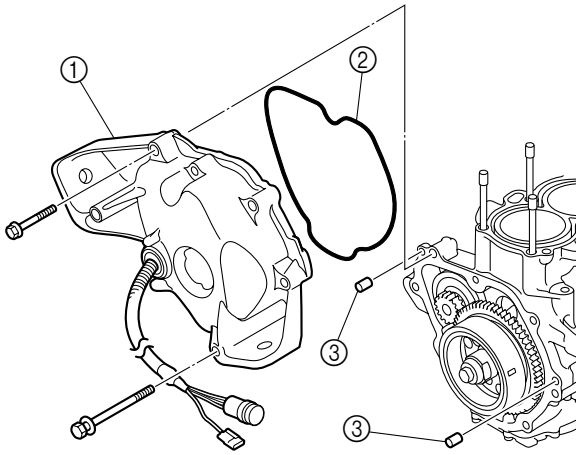

Flywheel magneto removal

1. Remove the idle gear shaft ① and idle gear ②.

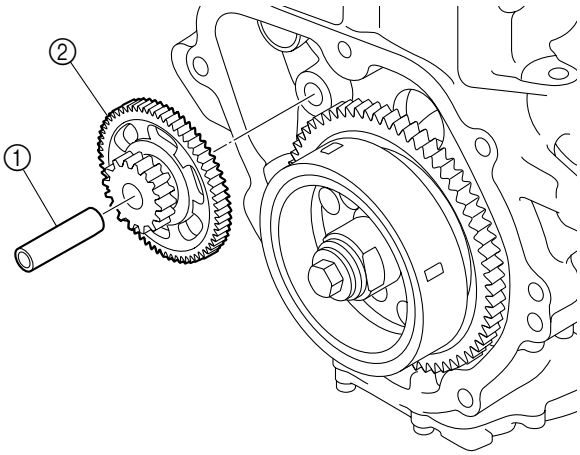

2. Hold the flywheel magneto ③ with the special service tool ④, and then loosen the bolt ⑤.

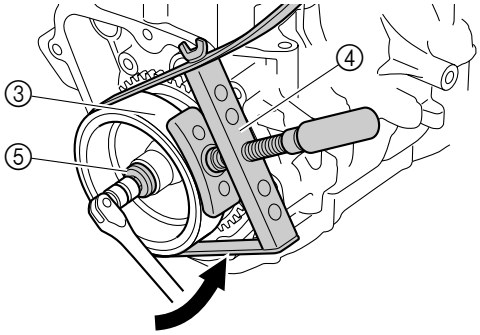

Primary sheave holder ④: YS-01880-A Sheave holder ④: 90890-01701

3. Remove the flywheel magneto ③ with the special service tools ④ and ⑥.

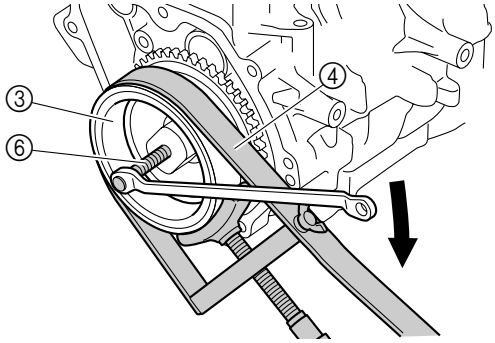

Rotor puller ⑥: 90890-01080

4. Remove the Woodruff key ⑦ and starter gear ⑧.

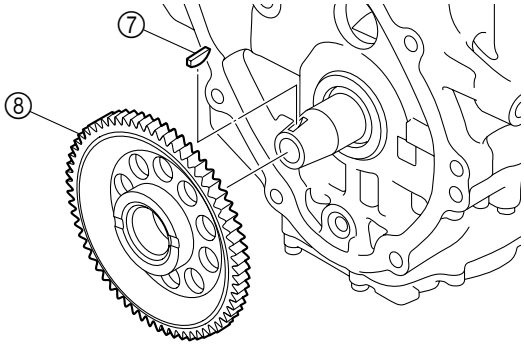

5. Hold the flywheel magneto ③ with the special service tool ④, and then loosen the bolts ⑨.

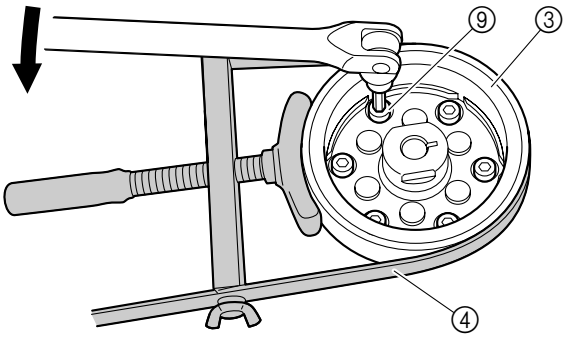

Primary sheave holder ④: YS-01880-A Sheave holder ④: 90890-01701

6. Remove the starter clutch ⑩ from the flywheel magneto ③.

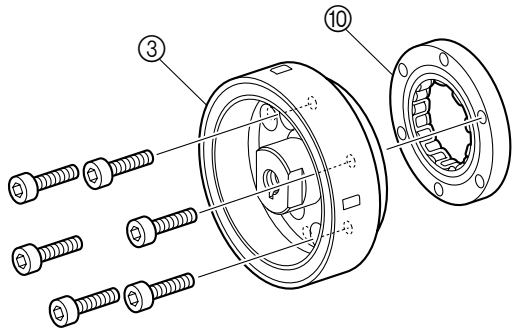

Generator cover assy. disassembly

1. Remove the washer ①, pickup coil ⓐ, holder ②, and stator coil assy. ③.

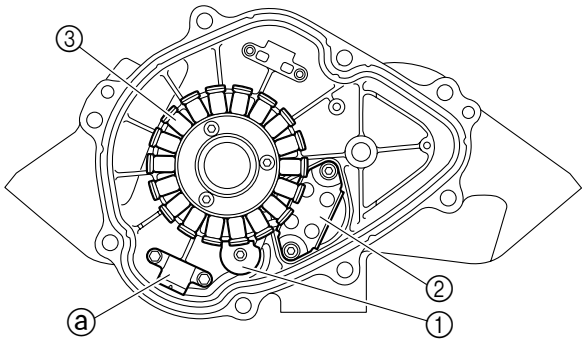

Starter clutch check

1. Check the starter clutch rollers. Replace if damaged or worn.

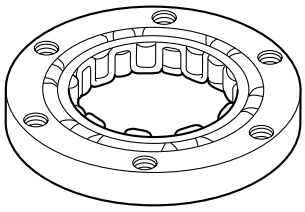

Starter gear check

1. Check the starter gear. Replace if cracked or damaged.

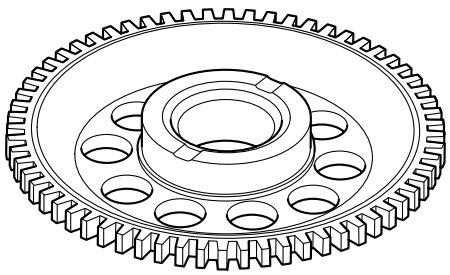

Starter clutch operation check

1. Install the starter clutch ① onto the starter gear ② and hold the starter clutch ①.

2. Turn the starter gear ② clockwise [A] and check that it turns smoothly. Replace if it does not turn smoothly.

3. Turn the starter gear ② counterclockwise [B] and check that it does not turn. Replace if it turns.

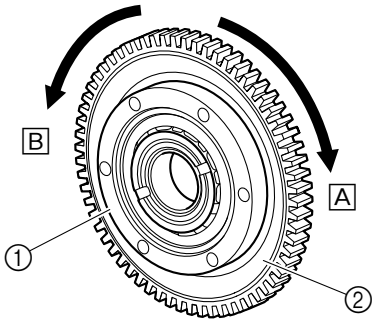

Generator cover assy. assembly

1. Install the stator coil ①, holder ②, pickup coil ⓐ, and washer ③, and then tighten the bolts ④, ⑤, ⑥, and ⑦ to the specified torques.

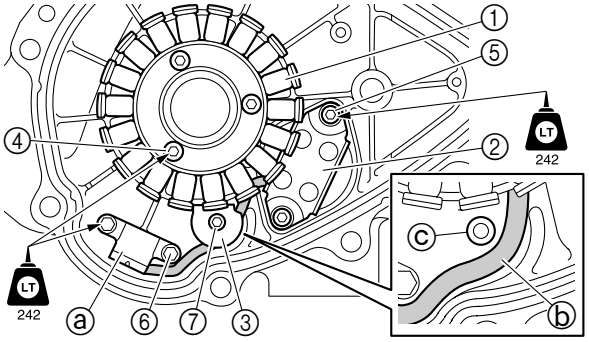

Stator coil bolt ④:
15 N·m (1.5 kgf·m, 11.1 ft·lb)
Holder bolt ⑤:
15 N·m (1.5 kgf·m, 11.1 ft·lb)
Pickup coil bolt ⑥:
5 N·m (0.5 kgf·m, 3.7 ft·lb)
Washer bolt ⑦:
5 N·m (0.5 kgf·m, 3.7 ft·lb)

TIP:

Pass the pickup coil lead ⓑ between the generator cover and the bolt hole ⓒ, and then fasten the lead by installing the washer ③ and bolt ⑦.

Flywheel magneto installation

1. Install the starter clutch ① to the flywheel magneto ②. ***NOTICE:*** **Make sure that the starter clutch is installed into the outer flange so that the side ⓐ is facing toward the flywheel magneto.**

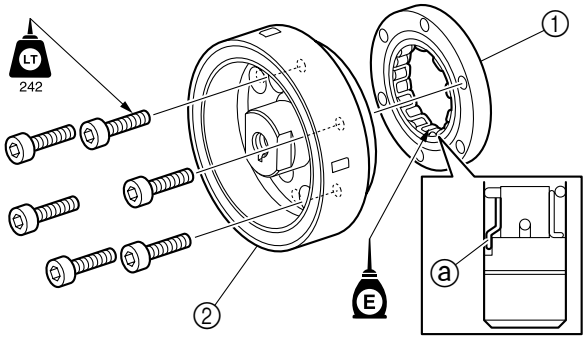

2. Hold the flywheel magneto ② with the special service tool ③, and then tighten the bolts ④ to the specified torque.

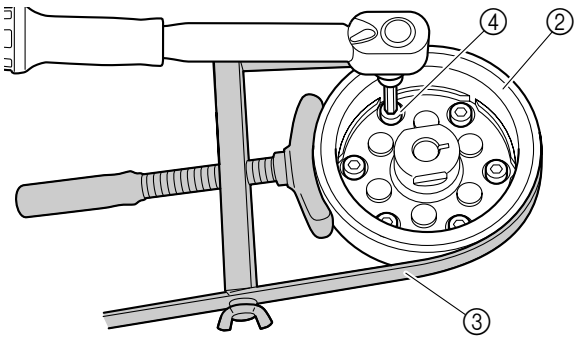

Primary sheave holder ③: YS-01880-A Sheave holder ③: 90890-01701

Starter clutch bolt ④: 24 N·m (2.4 kgf·m, 17.7 ft·lb)

3. Install the flywheel magneto ② to the starter gear ⑤.

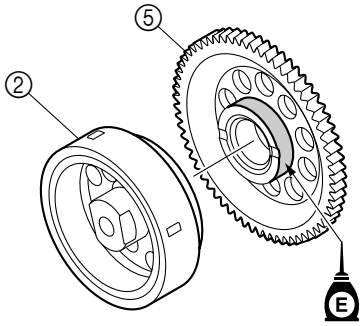

TIP:

Turn the starter gear ⑤ clockwise while installing it onto the flywheel magneto ②.

4. Clean the tapered portion ⓑ of the crankshaft and inner surface of the flywheel magneto.

5. Install the Woodruff key ⑥, and then flywheel magneto ②.

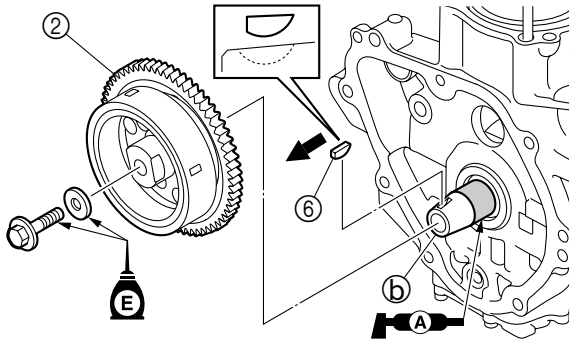

6. Hold the flywheel magneto ② with the special service tool ③, and then tighten a new bolt ⑦ to the specified torque. ***NOTICE:*** **Do not reuse a washer or flywheel magneto bolt, always replace it with a new one.**

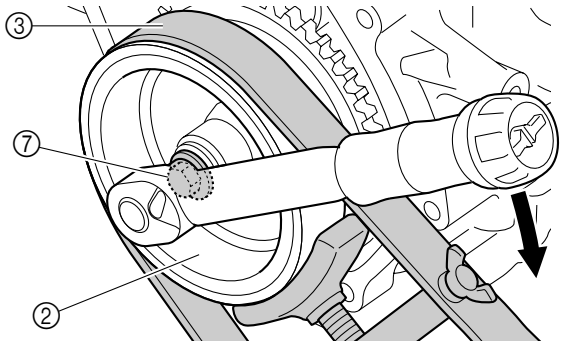

Primary sheave holder ③: YS-01880-A Sheave holder ③: 90890-01701

Flywheel magneto bolt ⑦: 75 N·m (7.5 kgf·m, 55.3 ft·lb)

7. Install the idle gear ⑧ and idle gear shaft ⑨.

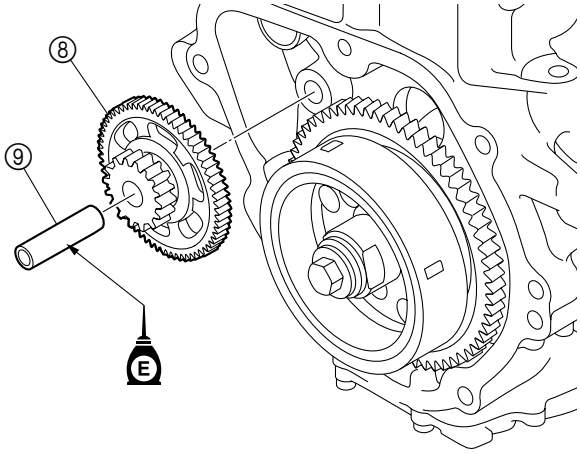

Generator cover assy. installation

1. Install the dowel pins ①, a new gasket ②, and the generator cover assy. ③, and then tighten the bolts ④ and ⑤ to the specified torques in 2 stages. ***NOTICE:*** **Do not reuse a gasket, always replace it with a new one.**

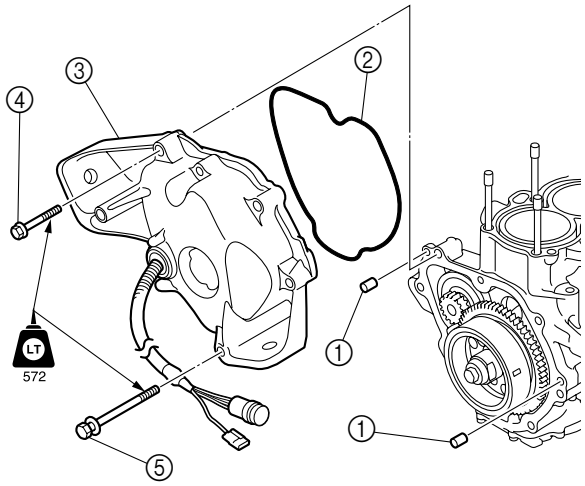

Generator cover bolts (M10 × 60 mm) ④: Generator cover bolts (M10 × 135 mm) ⑤: 1st: 15 N·m (1.5 kgf·m, 11.1 ft·lb) 2nd: 50 N·m (5.0 kgf·m, 36.9 ft·lb)

Timing chain and electrical part

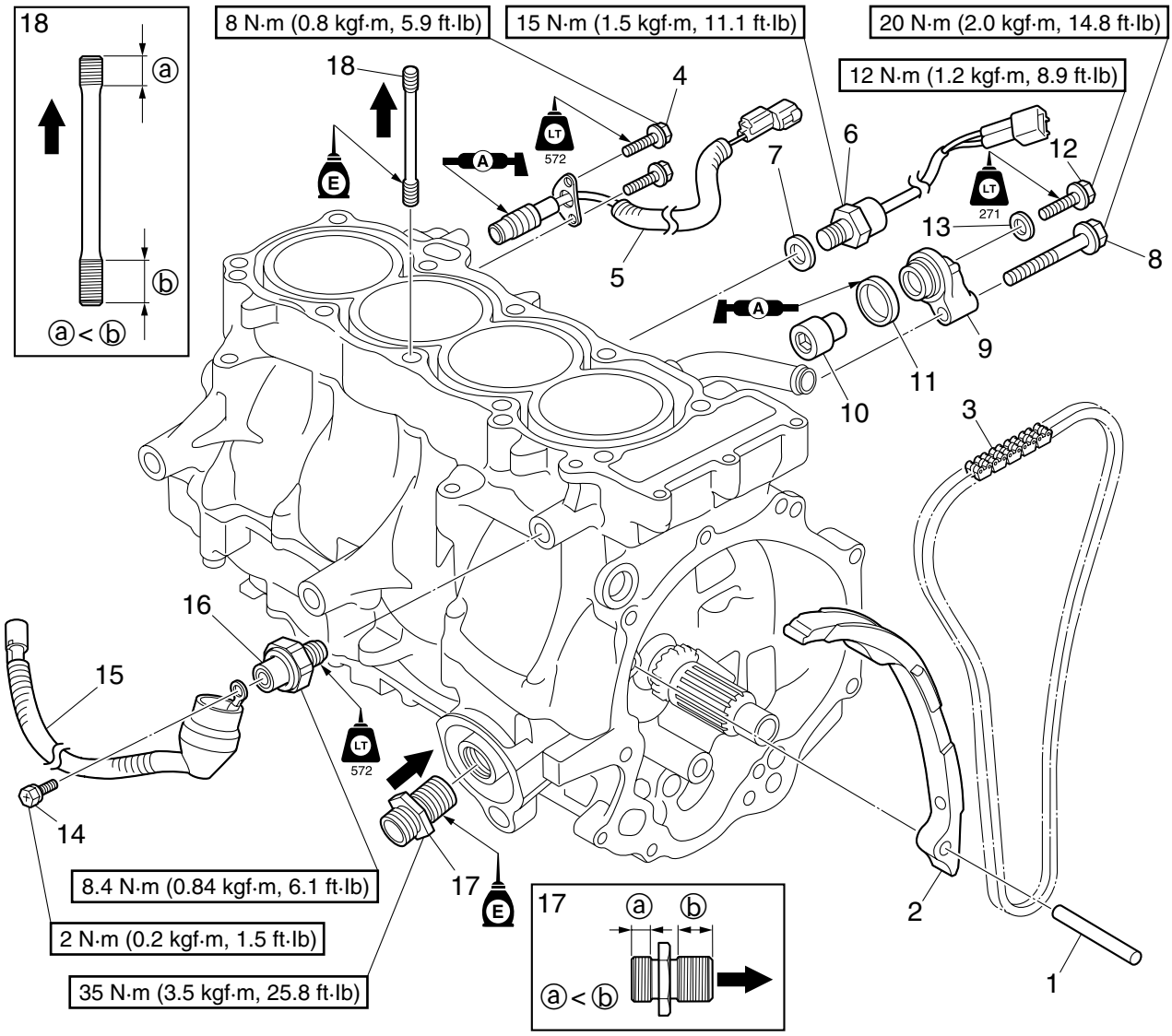

No.	Part name	Q'ty	Remarks
1	Pin	1	
2	Timing chain guide (intake side)	1	
3	Timing chain	1	
4	Bolt	2	M6 × 16 mm
5	Thermoswitch (engine)	1	
6	Engine temperature sensor	1	
7	Gasket	1	**Not reusable**
8	Bolt	1	M8 × 40 mm
9	Anode cover	1	
10	Anode	1	
11	Grommet	1	**Not reusable**
12	Bolt	1	M6 × 20 mm
13	Gasket	1	**Not reusable**
14	Bolt	1	M4 × 7 mm
15	Oil pressure switch lead	1	
16	Oil pressure switch	1	

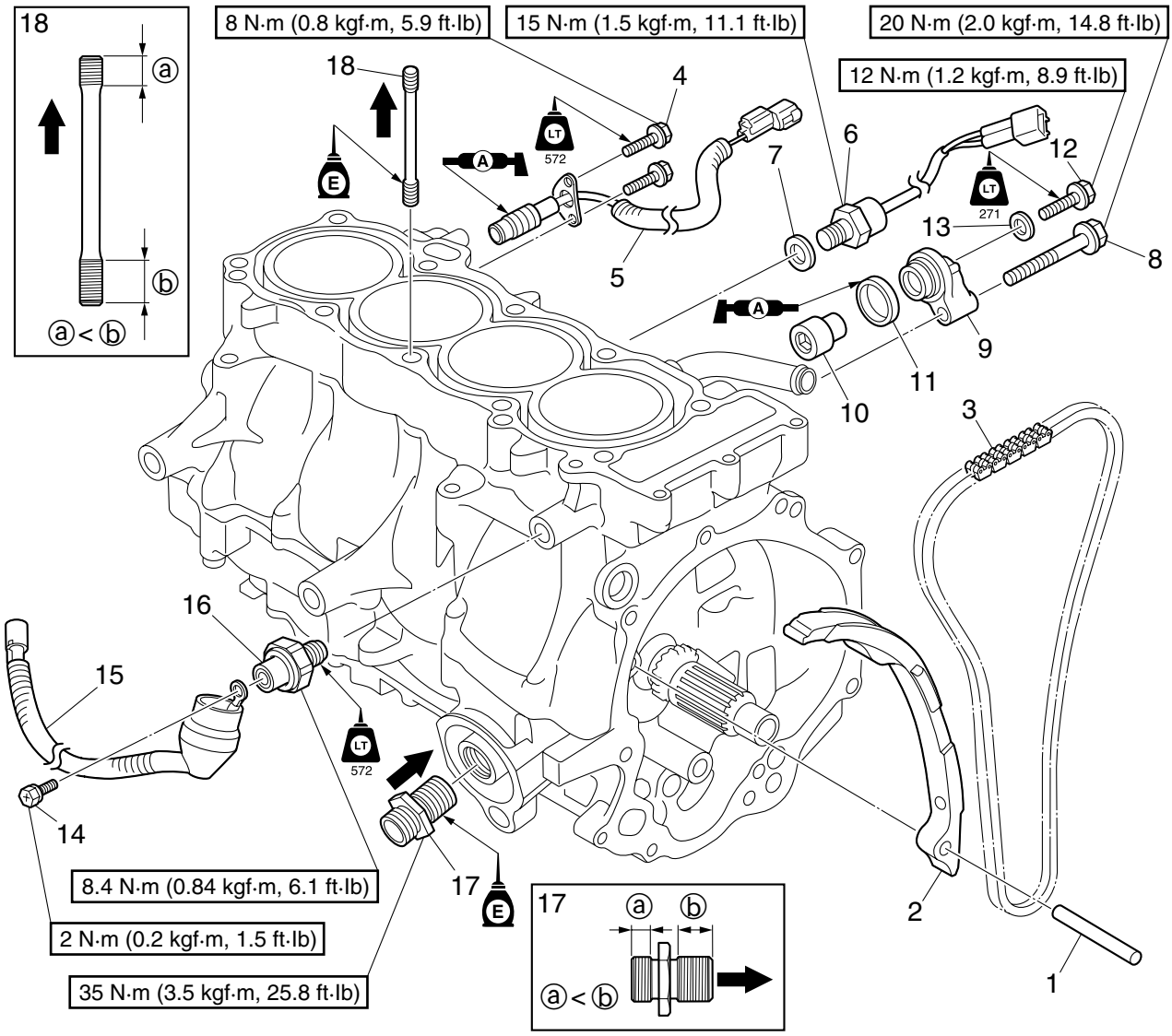

No.	Part name	Q'ty	Remarks
17	Oil filter bolt	1	
18	Stud bolt	10	

Crankcase, connecting rod, and piston

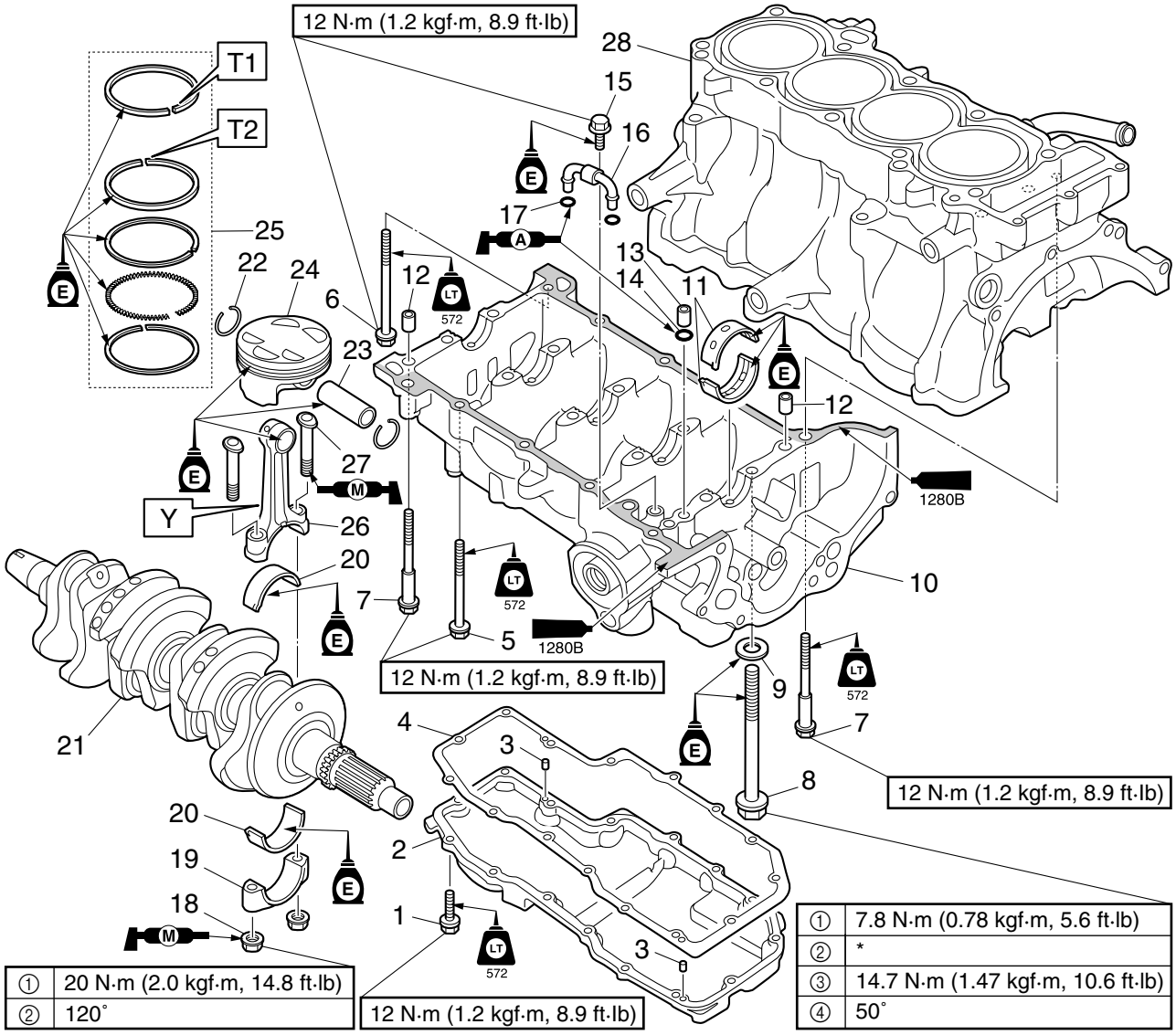

No.	Part name	Q'ty	Remarks
1	Bolt	15	M6 × 20 mm
2	Oil pan	1	
3	Dowel pin	2	
4	Gasket	1	**Not reusable**
5	Bolt	7	M6 × 55 mm
6	Bolt	1	M6 × 55 mm
7	Bolt	2	M6 × 70 mm
8	Bolt	10	**Not reusable** M9 × 105 mm
9	Washer	10	
10	Crankcase	1	
11	Crankshaft bearing	10	
12	Dowel pin	2	
13	Dowel pin	1	
14	O-ring	1	**Not reusable**

*: Loosen completely

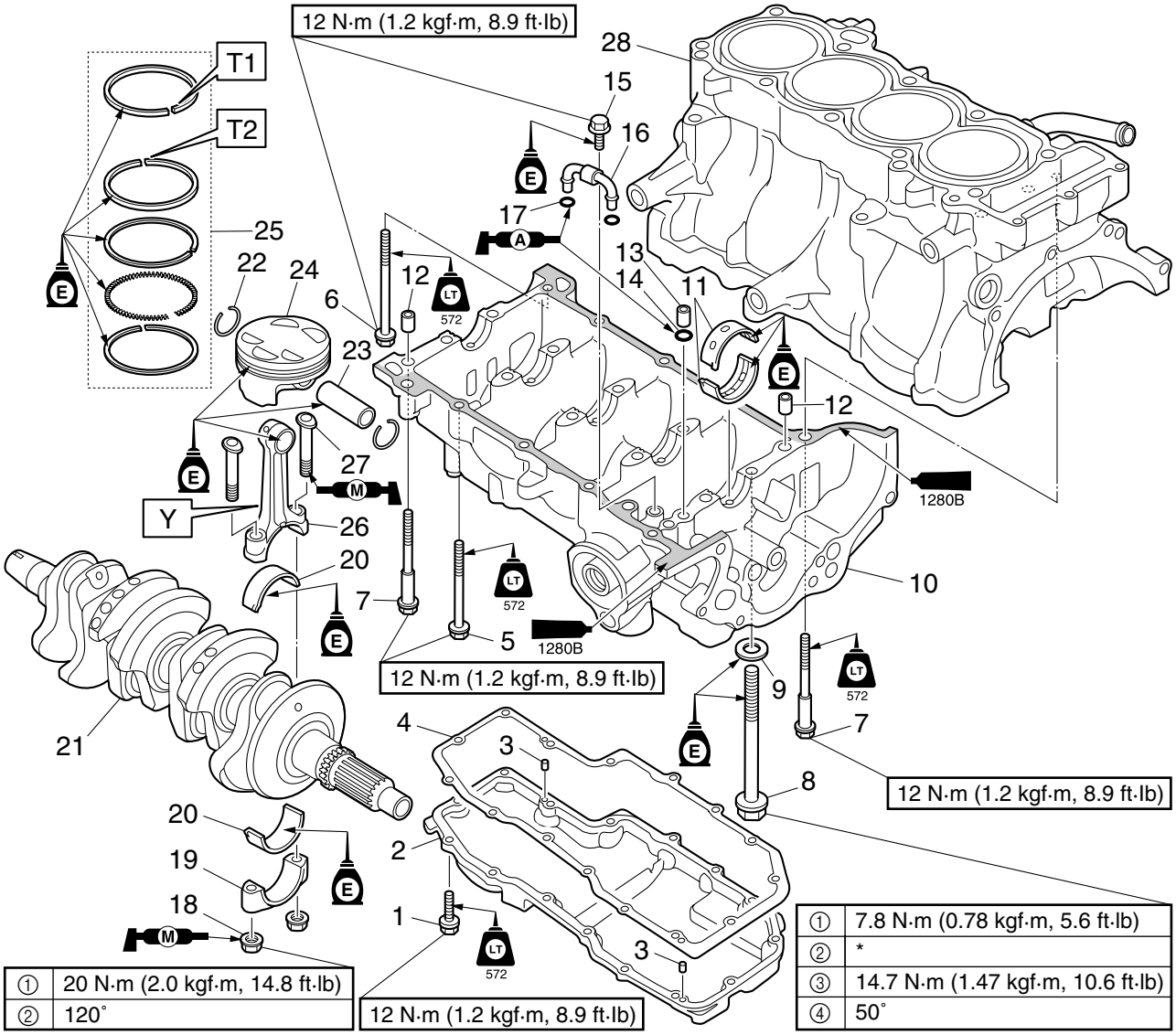

No.	Part name	Q'ty	Remarks
15	Bolt	1	M6 × 10 mm
16	Oil pipe	1	
17	O-ring	2	**Not reusable**
18	Nut	8	
19	Connecting rod cap	4	
20	Connecting rod bearing	8	
21	Crankshaft	1	
22	Piston pin clip	8	**Not reusable**
23	Piston pin	4	
24	Piston	4	
25	Piston ring set	4	
26	Connecting rod	4	
27	Bolt	8	**Not reusable**
28	Cylinder block	1	

*: Loosen completely

Timing chain and timing chain guide (intake side) removal

1. Remove the pin ①, timing chain guide (intake side) ②, and timing chain ③.

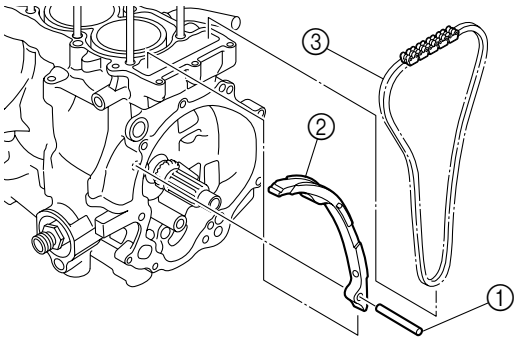

Electrical part and anode removal

1. Remove the thermoswitch (engine) ① and engine temperature sensor ②.

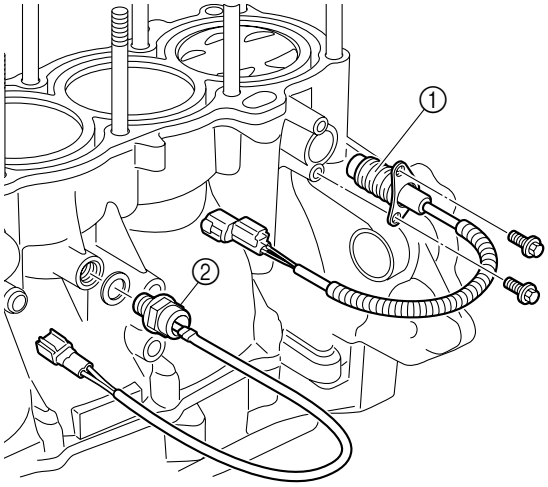

2. Remove the anode cover ③, and then remove the anode ④ and grommet ⑤ from the anode cover ③.

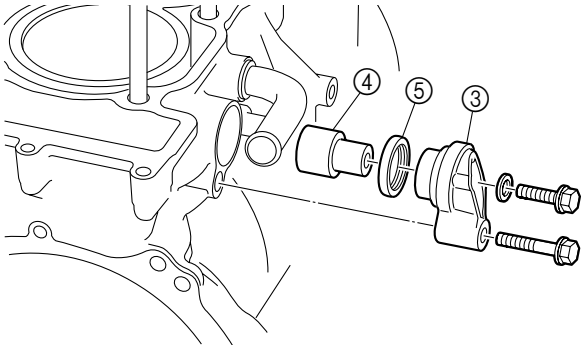

3. Remove the oil pressure switch lead ⑥, and then remove the oil pressure switch ⑦.

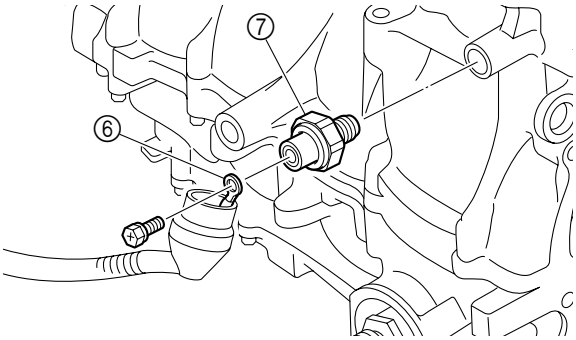

Oil filter bolt removal

1. Remove the oil filter bolt ①.

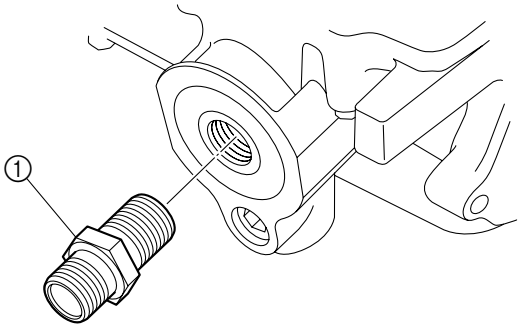

Stud bolts removal

1. Remove the stud bolts ①.

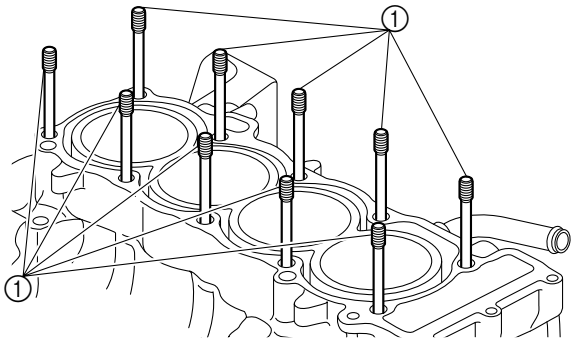

Oil pan removal

1. Place the crankcase upside down on a bench.

2. Loosen the bolts in the order [1], [2], and so on, and then remove the oil pan ①, gasket ②, and dowel pins ③.

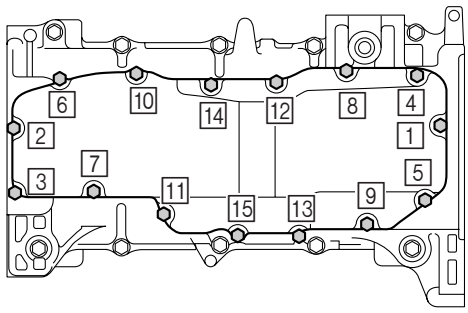

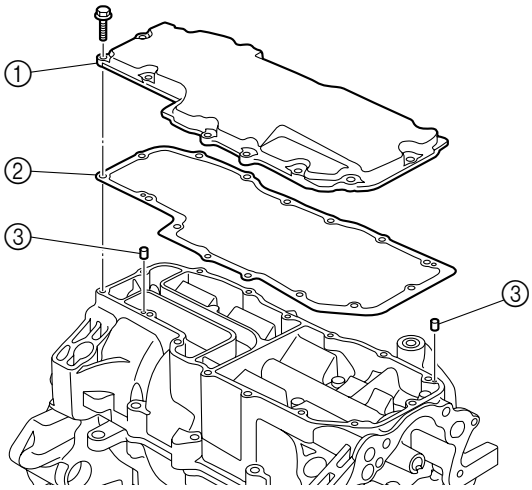

TIP:
The numbers embossed on the oil pan indicate the oil pan tightening order.

Crankcase disassembly

1. Place the crankcase upside down on a bench.

2. Loosen the bolts in the order [1], [2], and so on.

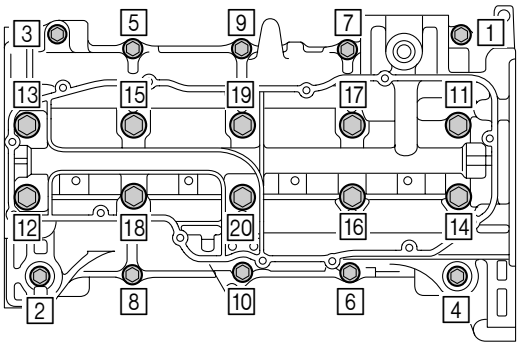

TIP:
The numbers embossed on the crankcase indicate the crankcase tightening order.

3. Remove the crankcase ①.

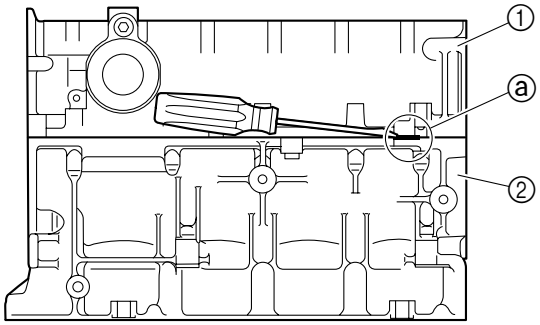

TIP:
- Insert a flat-head screwdriver between the reinforced portions ⓐ of the cylinder block ② and the crankcase ① to separate them.
- Work carefully and make sure that the cylinder block and crankcase separate evenly.

4. Remove the dowel pins ③ and ④, and O-ring ⑤.

5. Remove the oil pipe ⑥ and O-rings ⑦.

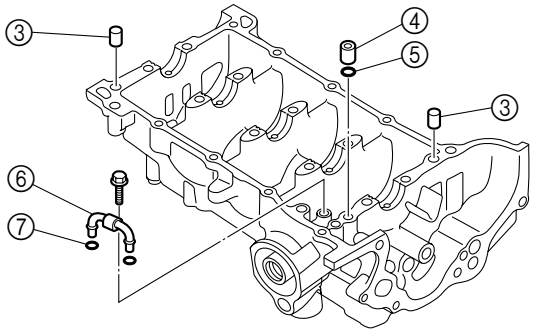

6. Remove the crankshaft bearings ⑧ from the crankcase.

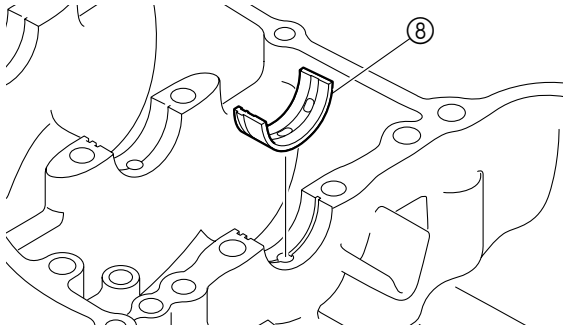

TIP:
Make a note of the position of each crankshaft bearing so that it can be installed in its original position.

Connecting rod and piston removal

1. Remove the connecting rod cap ①, and then remove the connecting rod bearings ② and connecting rod assy. ③.

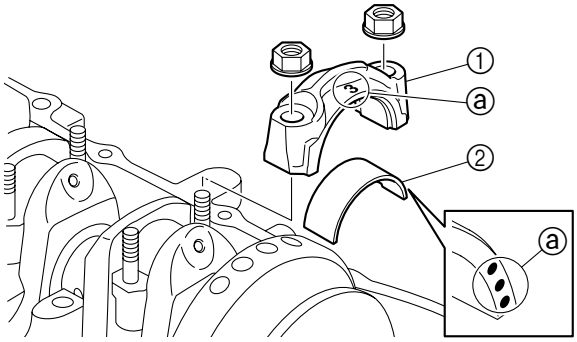

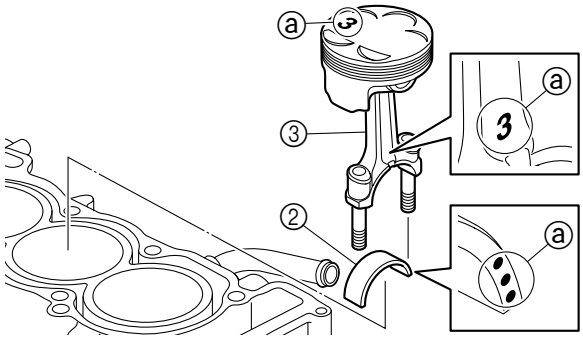

TIP:

For reference during installation, make identification marks ⓐ on the connecting rod cap, connecting rod, connecting rod bearings, and piston crown.

2. Remove the piston pin clips ④, piston pin ⑤, connecting rod ⑥, and connecting rod bolts ⑦.

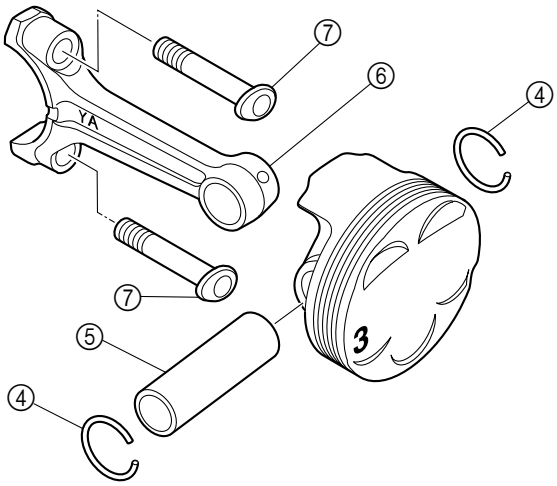

3. Remove the piston rings ⑧.

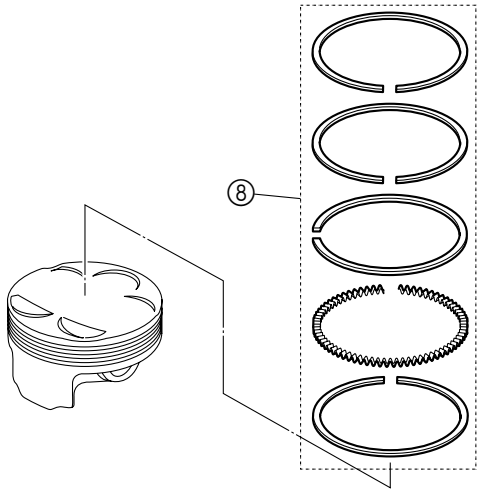

Timing chain check

1. Check the timing chain. Replace the timing chain and camshaft sprockets as a set if damaged, stiff, or worn.

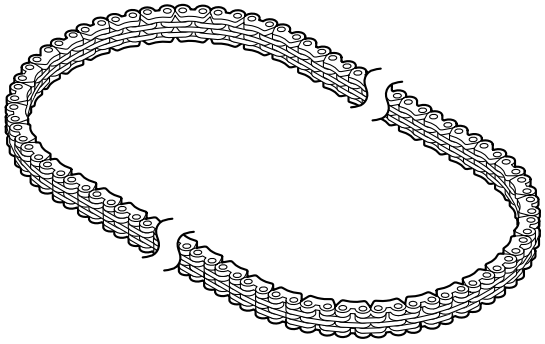

Anode check

1. Check the anode ①. Replace if eroded.
2. Check the grommet ②. Replace if cracked or damaged.

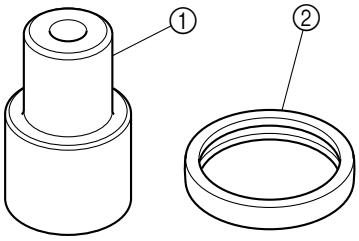

Crankcase check

1. Check the crankcase. Replace the crankcase assy. if cracked or damaged.
2. Check the oil passages. Blow out with compressed air if there are obstructions.

Piston check

1. Check the piston wall. Replace if there are vertical scratches.

2. Measure the piston outside diameter ⓐ. Replace if out of specification.

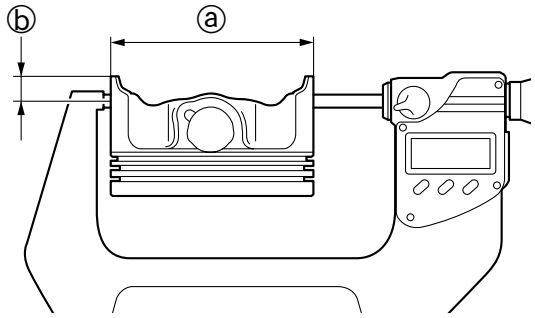

Piston outside diameter ⓐ: 75.895–75.910 mm (2.9880–2.9886 in) Measuring point ⓑ: 5.0 mm (0.20 in)

3. Measure the piston pin boss bore diameter ⓒ. Replace if out of specification.

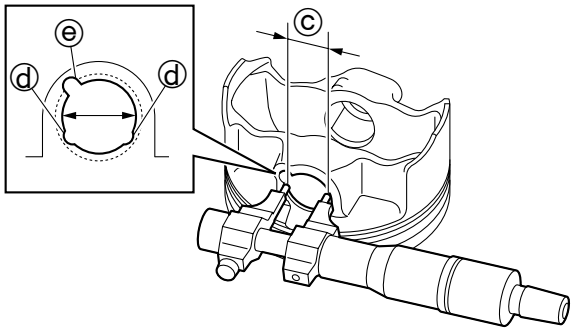

Piston pin boss bore diameter ⓒ: 17.002–17.013 mm (0.6694–0.6698 in)

TIP:

When measuring the piston pin boss bore diameter ⓒ, do not measure it at the oil grooves ⓓ or piston pin slot ⓔ.

Piston ring check

1. Measure piston ring dimensions B and T. Replace the piston rings as a set if out of specification.

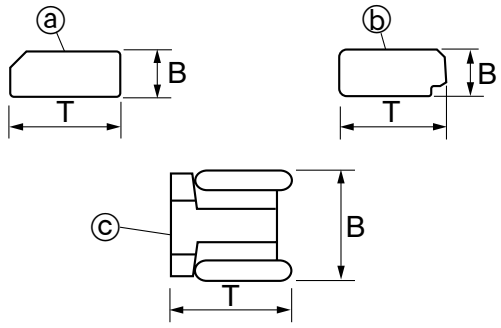

Piston ring dimensions: Top ring ⓐ: B: 0.875–0.890 mm (0.0344–0.0350 in) T: 2.600–2.800 mm (0.1024–0.1102 in) 2nd ring ⓑ: B: 0.775–0.790 mm (0.0305–0.0311 in) T: 2.650–2.850 mm (0.1043–0.1122 in) Oil ring ⓒ: B: 1.370–1.470 mm (0.0539–0.0579 in) T (reference data): 2.600 mm (0.1024 in)

2. Measure the piston ring end gap ⓓ.

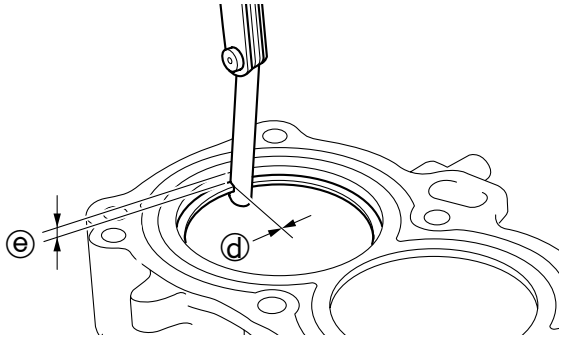

Piston ring end gap ⓓ (reference data): Top ring: 0.320–0.440 mm (0.0126–0.0173 in) 2nd ring: 0.430–0.580 mm (0.0169–0.0228 in) Oil ring: 0.100–0.350 mm (0.0039–0.0138 in) Measuring point ⓔ: 6.0 mm (0.24 in)

3. Measure the piston ring grooves. Replace if out of specification.

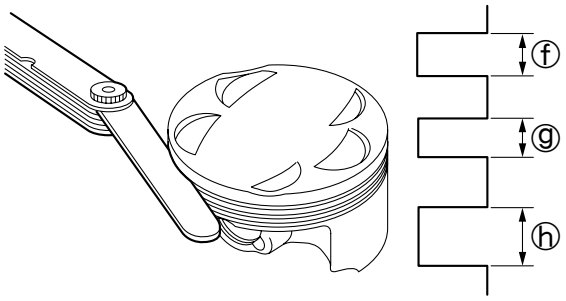

Piston ring groove: Top ring ⓕ: 0.920–0.940 mm (0.0362–0.0370 in) 2nd ring ⓖ: 0.810–0.830 mm (0.0319–0.0327 in) Oil ring ⓗ: 1.510–1.530 mm (0.0594–0.0602 in)

TIP:

Before measuring the piston ring grooves, eliminate any carbon deposits from the piston ring grooves.

4. Measure the piston ring side clearance. Replace the piston and piston rings as a set if out of specification.

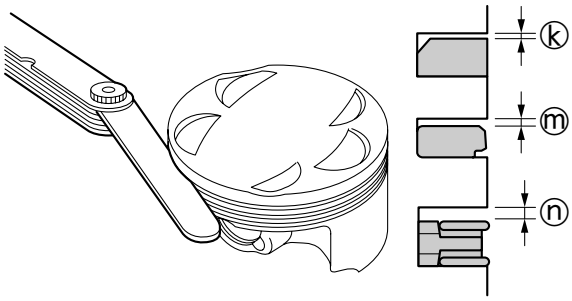

Piston ring side clearance: Top ring ⓚ: 0.030–0.065 mm (0.0012–0.0026 in) 2nd ring ⓜ: 0.020–0.055 mm (0.0008–0.0022 in) Oil ring ⓝ: 0.040–0.160 mm (0.0016–0.0063 in)

TIP:

Before measuring the piston ring side clearance, eliminate any carbon deposits from the piston ring grooves and piston rings.

Piston pin check

1. Measure the piston pin outside diameter ⓐ. Replace if out of specification.

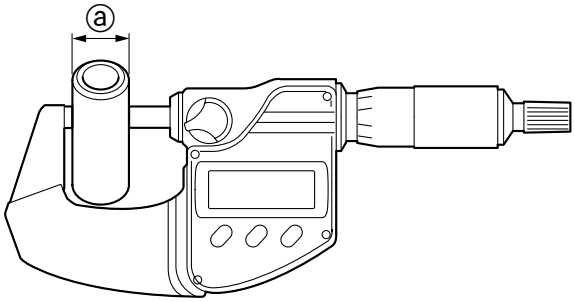

Piston pin outside diameter ⓐ: 16.991–17.000 mm (0.6689–0.6693 in)

Connecting rod check

1. Measure the connecting rod small end inside diameter ⓐ. Replace the connecting rod assy. if out of specification.

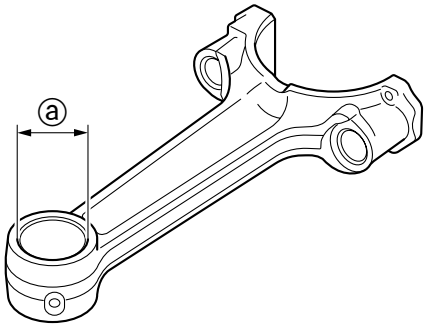

Connecting rod small end inside diameter ⓐ: 17.005–17.018 mm (0.6695–0.6700 in)

Cylinder block check

1. Check the cylinder walls. Replace the crankcase assy. if there are vertical scratches.

2. Measure the cylinder bore (D_1–D_6) at measuring points ⓐ, ⓑ, and ⓒ, and in direction (D_1, D_3, and D_5), which is parallel to the crankshaft, and direction (D_2, D_4, and D_6), which is at a right angle to the crankshaft. Replace the crankcase assy. if out of specification.

5

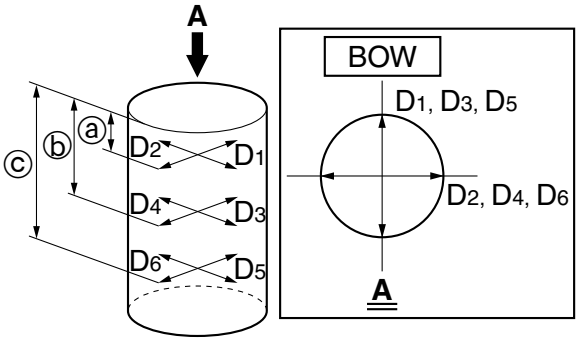

Cylinder bore (D_1–D_6):
76.000–76.015 mm
(2.9921–2.9927 in)
Measuring points:
ⓐ: 20 mm (0.8 in)
ⓑ: 50 mm (2.0 in)
ⓒ: 80 mm (3.1 in)

Crankshaft check

1. Measure the crankshaft journal diameter ⓐ and crankshaft pin diameter ⓑ. Replace if out of specification.

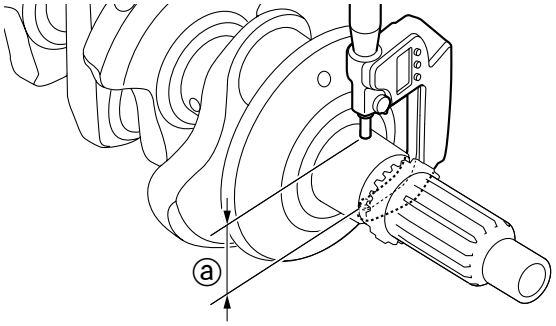

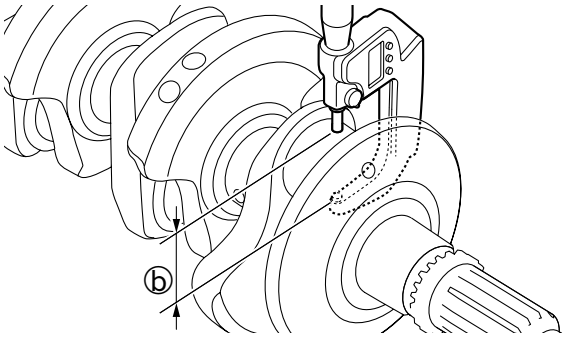

Crankshaft journal diameter ⓐ:
33.976–34.000 mm
(1.3376–1.3386 in)
Crankshaft pin diameter ⓑ:
35.976–36.000 mm
(1.4164–1.4173 in)

2. Measure the crankshaft runout. Replace if out of specification.

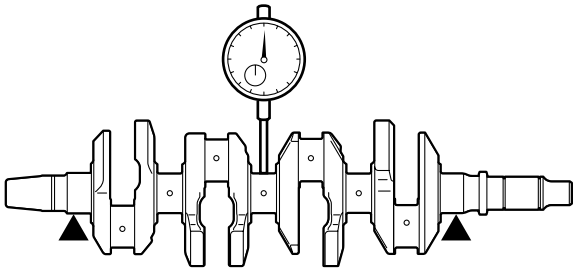

Crankshaft runout limit:
0.03 mm (0.0012 in)

Crankshaft pin oil clearance check

1. Clean the connecting rod bearings ① and connecting rod big end.

2. Install the upper bearing into the connecting rod ② and lower bearing into the connecting rod cap ③.

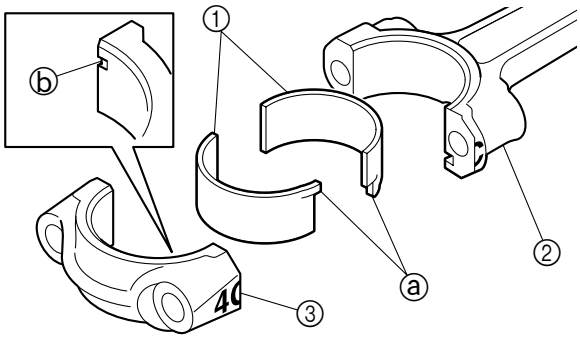

TIP:
- Install the connecting rod bearings ① in their original positions.
- Fit the protrusion ⓐ on each bearing into the slots ⓑ in the connecting rod cap ③ and connecting rod ②.

3. Put a piece of Plastigauge ④ on the crankshaft pin, parallel to the crankshaft.

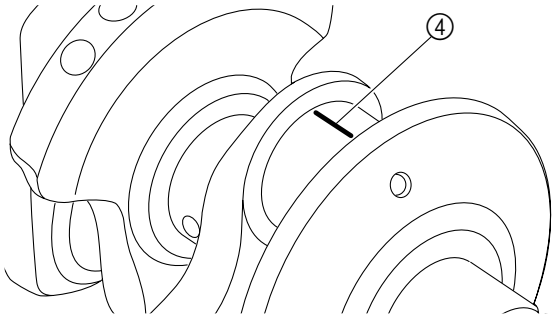

TIP:
Do not put the Plastigauge over the oil hole in the crankshaft pin.

4. Install the connecting rod onto the crankshaft pin.

5. Tighten the connecting rod nuts to the specified torques in 2 stages.

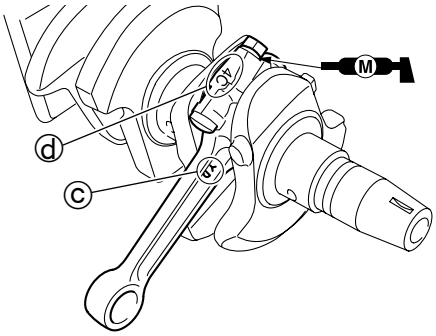

Connecting rod nut: 1st: 20 N·m (2.0 kgf·m, 14.8 ft·lb) 2nd: 120°

TIP:
- Make sure that the embossed mark ⓒ on the connecting rod faces toward the front end of the crankshaft.
- Make sure that the characters ⓓ on the connecting rod cap and connecting rod are aligned.
- Do not turn the connecting rod until the crankshaft pin oil clearance measurement has been completed.

6. Remove the connecting rod cap ③ and measure the width ⓔ of the compressed Plastigauge on each crankshaft pin. Replace the connecting rod bearing ① if out of specification.

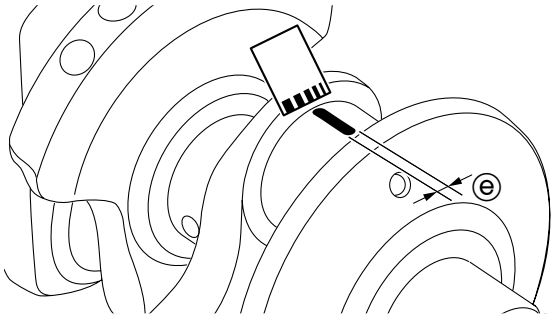

Crankshaft pin oil clearance ⓔ: 0.016–0.040 mm (0.0006–0.0016 in)

Connecting rod bearing selection

1. Check the connecting rod size number ⓐ on the connecting rod.

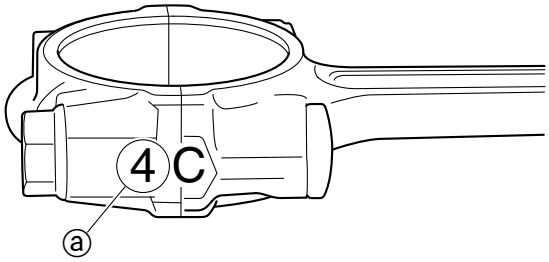

2. Check the crankshaft pin size number ⓑ on the crankshaft web.

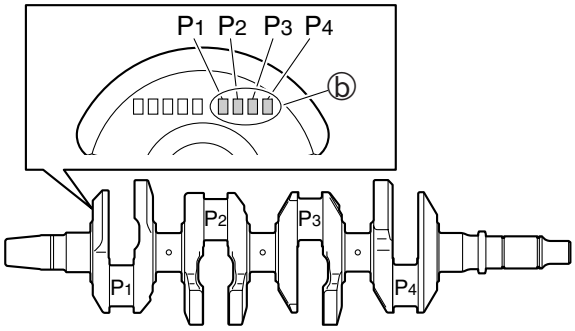

3. Select the suitable color ⓒ for the connecting rod bearing from the table.

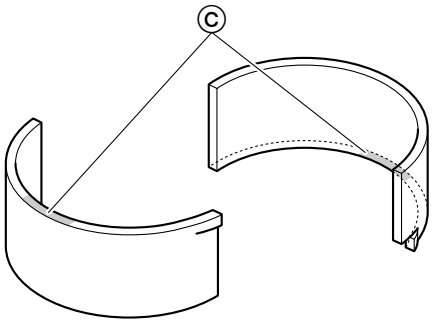

Calculation formula: Connecting rod bearing size number = connecting rod size number ⓐ – crankshaft pin size number ⓑ	
Bearing size number	Bearing color ⓒ
1	Brown
2	Black
3	Blue
4	Green

Example:
"P1" connecting rod size number "4"
"P1" crankshaft pin size number "1"
4 – 1 = 3
Select the size "3", "blue" connecting rod bearing.

Crankshaft journal oil clearance check

1. Clean the crankshaft bearings, crankshaft journals, and bearing portions of the crankcase and cylinder block.

2. Place the cylinder block upside down on a bench.

3. Install the crankshaft bearings ① into the cylinder block and crankcase.

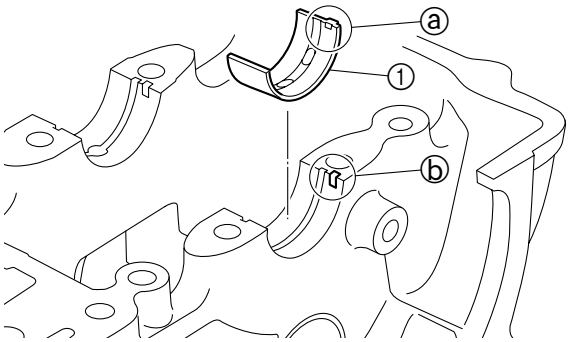

TIP:
- Install the crankshaft bearings ① in their original positions.
- Fit the protrusion ⓐ on each bearing into the slots ⓑ in the cylinder block and crankcase.

4. Install the crankshaft ②.

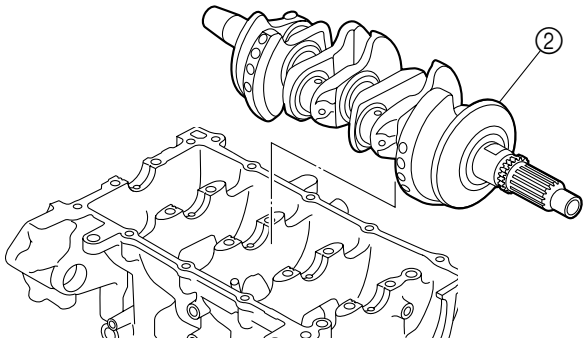

5. Put a piece of Plastigauge ③ on each crankshaft journal, parallel to the crankshaft.

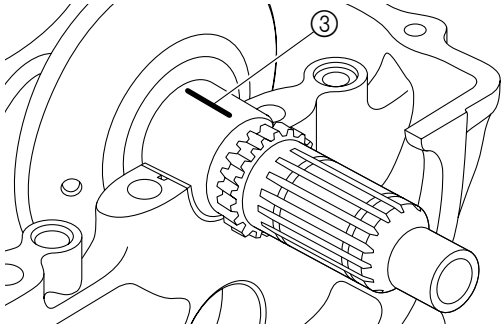

TIP:
Do not put the Plastigauge over the oil hole in the main journals of the crankshaft.

6. Install the dowel pins ④ and crankcase ⑤ onto the cylinder block, and then tighten the bolts ⑥ to the specified torques in 4 stages and in the order [1], [2], and so on.

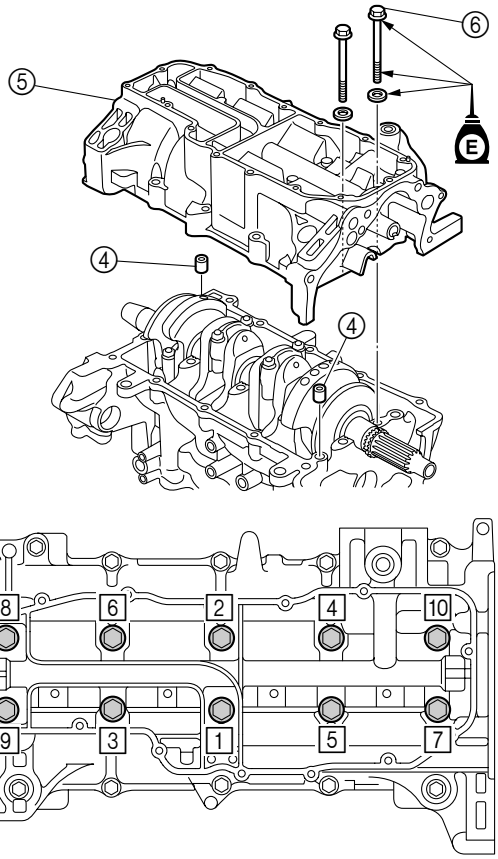

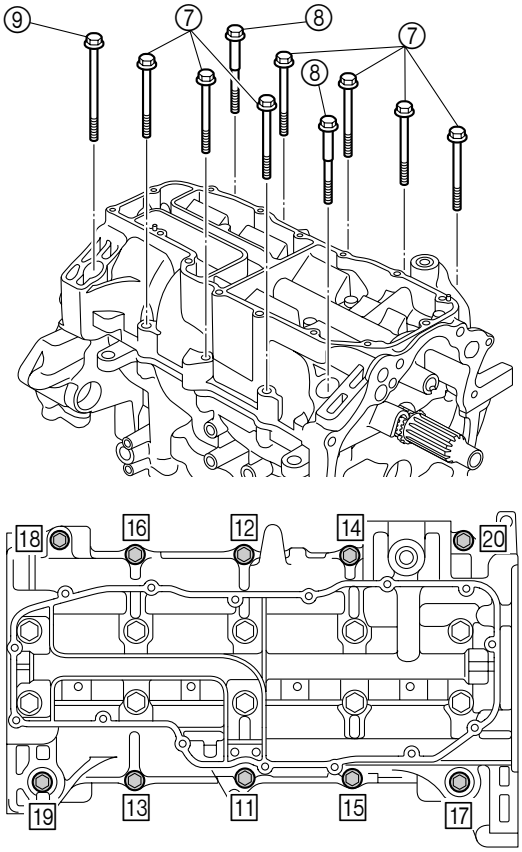

Crankcase bolt ⑥: 1st: 7.8 N·m (0.78 kgf·m, 5.6 ft·lb) 2nd: Loosen completely 3rd: 14.7 N·m (1.47 kgf·m, 10.6 ft·lb) 4th: 50°

TIP:

Do not turn the crankshaft until the crankshaft journal oil clearance measurement has been completed.

7. Tighten the bolts ⑦, ⑧, and ⑨ to the specified torque in the order [11], [12], and so on.

Crankcase bolt ⑦, ⑧, and ⑨: 12 N·m (1.2 kgf·m, 8.9 ft·lb)

8. Loosen the bolts ⑨, ⑧, ⑦, and ⑥ in the order [1], [2], and so on.

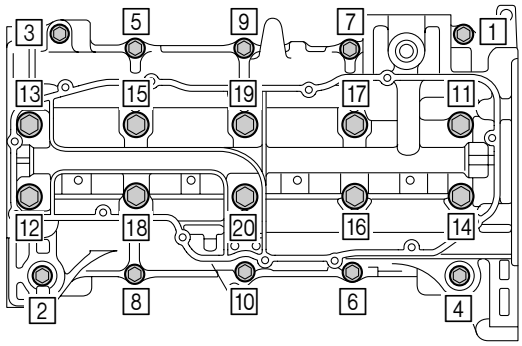

9. Remove the crankcase ⑤ and measure the width ⓒ of the compressed Plastigauge on each crankshaft journal. Replace the crankshaft bearings if out of specification.

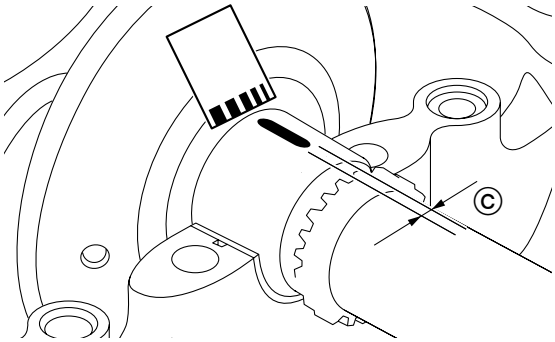

Crankshaft journal oil clearance ⓒ:
0.004–0.028 mm (0.0002–0.0011 in)

Crankshaft bearing selection

1. Check the crankcase journal size number ⓐ on the crankcase.

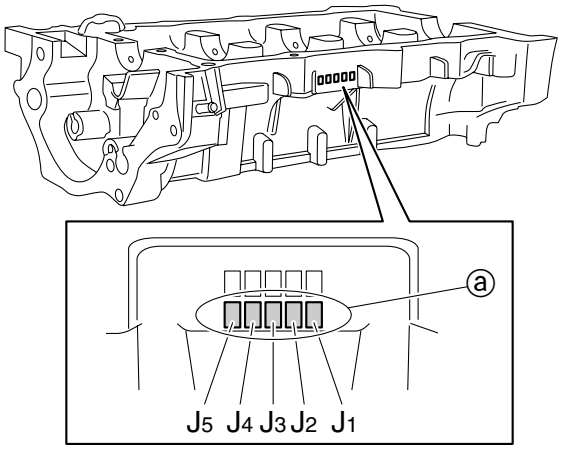

TIP:

If the crankcase journal sizes are the same at all positions, the size number ⓐ is stamped only at the "J1" position.

Example:

If "J1"–"J5" are different:

J5	J4	J3	J2	J1
8	7	7	8	7

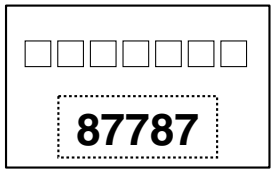

If "J1"–"J5" are the same:

J5	J4	J3	J2	J1
7	7	7	7	7

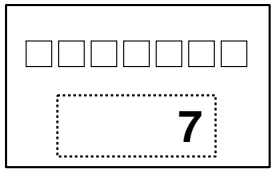

2. Check the crankshaft journal size number ⓑ on the crankshaft web.

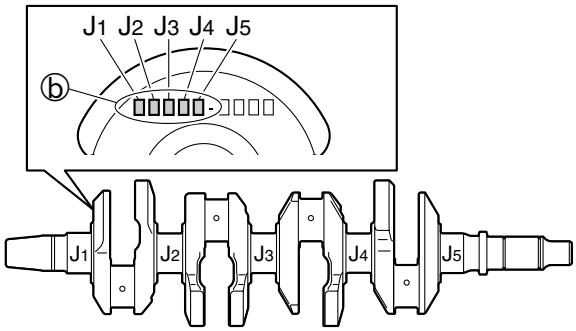

3. Select the suitable color ⓒ and ⓓ for the crankshaft bearing from the table.

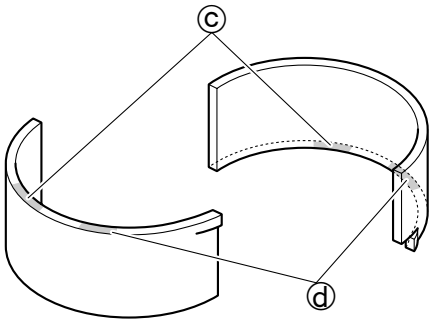

Calculation formula: Crankshaft bearing size number = crankcase journal size number ⓐ – crankshaft journal size number ⓑ –1	
Bearing size number	Bearing color ⓒ/ⓓ
3	Red/Red
4	Red/Brown
5	Red/Black
6	Red/Blue
7	Red/Green

Example:
"J1" crankcase journal size number "8"
"J1" crankshaft journal size number "2"
8 – 2 – 1 = 5
Select the size "5", "Red/Black" crankshaft bearings.

Connecting rod and piston installation

1. Install new connecting rod cap bolts ① to the connecting rod ②.

2. Assemble the connecting rod ②, piston ③, piston pin ④, and new piston pin clips ⑤. ***NOTICE:*** **Do not reuse a connecting rod cap bolt or piston pin clip, always replace it with a new one.**

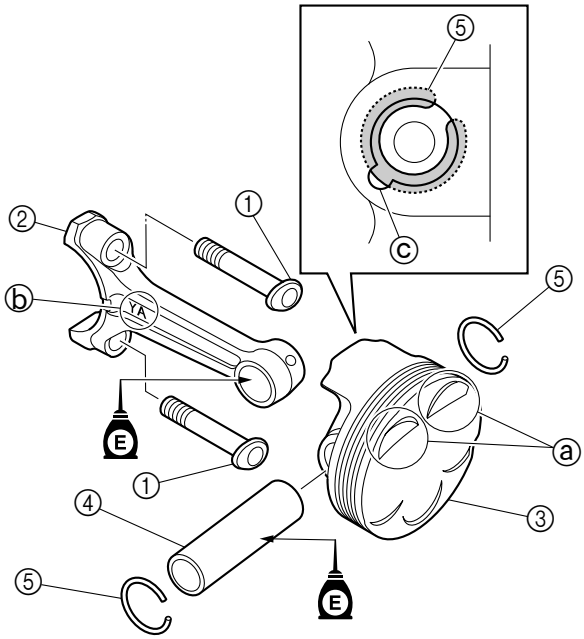

TIP:
- Position the piston so that the exhaust valve recesses ⓐ face up, and then install the connecting rod so that the embossed mark ⓑ faces to the left.
- Do not allow the piston pin clip ends to align with the piston pin slot ⓒ.

3. Install the oil ring ⑥, 2nd ring ⑦, and top ring ⑧. ***NOTICE:*** **Do not scratch the pistons or break the piston rings.**

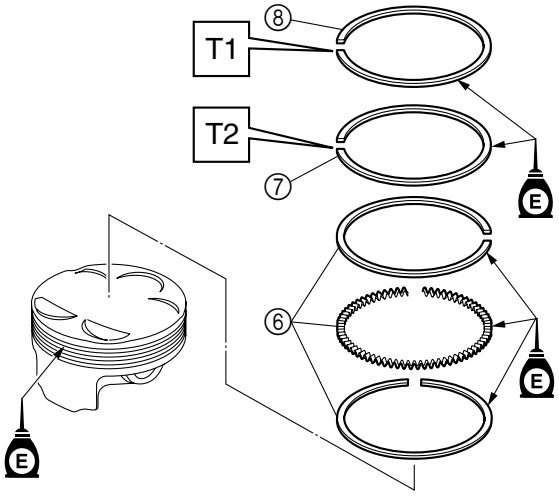

TIP:
- Make sure to install the piston rings so that the “T1” mark on the top ring ⑧ and the “T2” mark on the 2nd ring ⑦ face up.
- After installing the piston rings, make sure that they move smoothly.

4. Offset the piston ring end gaps.

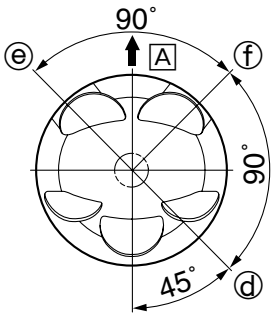

ⓓ Top ring, oil ring expander spacer
ⓔ 2nd ring, lower oil ring rail
ⓕ Upper oil ring rail
A Exhaust side

5. Clean the connecting rod bearings ⑨ and connecting rod big end.

6. Install the upper bearing into the connecting rod assy. ⑩ and lower bearing into the connecting rod cap ⑪.

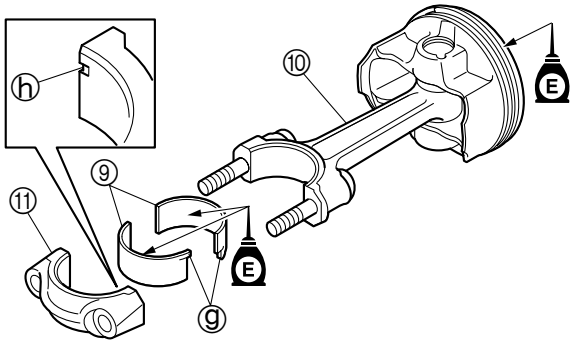

TIP:
- Install the connecting rod bearings ⑨ in their original positions.
- Fit the protrusion ⓖ on each bearing into the slots ⓗ in the connecting rod cap ⑪ and connecting rod assy. ⑩.

7. While compressing the piston rings with the special service tool ⑫, install the connecting rod assy. ⑩ into the cylinder.

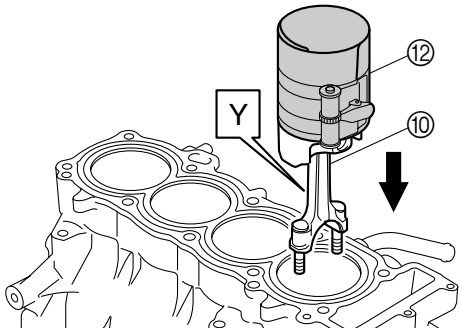

Piston ring compressor ⑫: YM-08037/90890-05158

TIP:
Make sure that the “Y” mark on the connecting rod faces towards the front end of the crankshaft.

8. Install half of the crankshaft bearings ⑬ into the cylinder block.

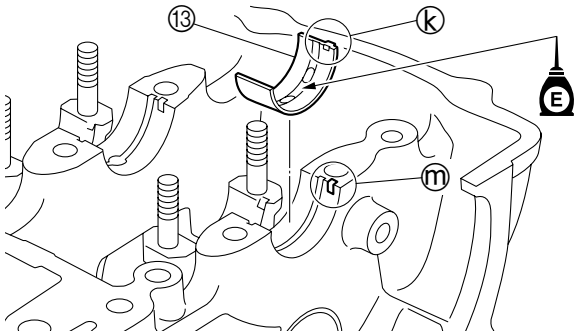

TIP:
- Install the crankshaft bearings in their original positions.
- Fit the protrusion ⓚ on each bearing into the slots ⓜ in the cylinder block.

9. Install the crankshaft ⑭.

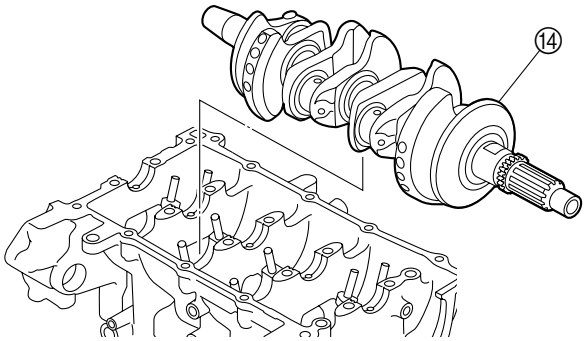

10. Install the connecting rod cap ⑪ onto the connecting rod assy. ⑩, and then tighten the connecting rod nuts ⑮ to the specified torques in 2 stages.

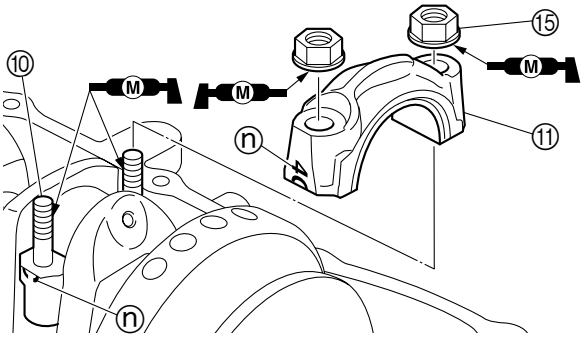

Connecting rod nut ⑮: 1st: 20 N·m (2.0 kgf·m, 14.8 ft·lb) 2nd: 120°

TIP:
- Make sure that the characters ⓝ on the connecting rod cap ⑪ and connecting rod assy. ⑩ are aligned.
- Use a commercially available angle gauge to tighten the nuts to the specified angle.

Crankcase assembly

NOTICE

Do not reuse a crankcase bolt or O-ring, always replace it with a new one.

1. Thoroughly clean all the gasket surfaces and crankcase mating surfaces.

2. Install half of the crankshaft bearings ① into the crankcase.

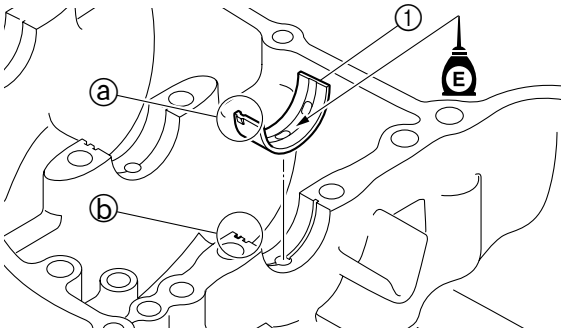

TIP:
- Install the crankshaft bearings ① in their original positions.
- Fit the protrusion ⓐ on each bearing into the slots ⓑ in the crankcase.

3. Install new O-rings ② and the oil pipe ③, and then tighten the bolt ④ to the specified torque.

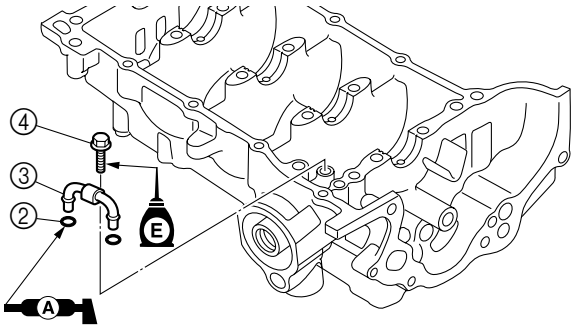

Oil pipe bolt ④: 12 N·m (1.2 kgf·m, 8.9 ft·lb)

4. Apply sealant to the mating surface of the crankcase.

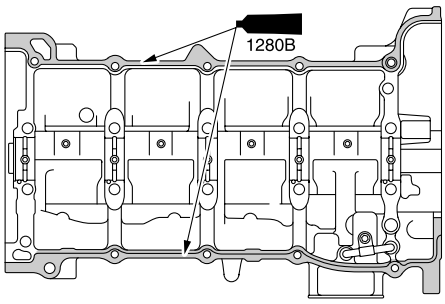

TIP:
Do not get any sealant on the crankshaft bearing.

5. Install the dowel pins ⑤ and ⑥, a new O-ring ⑦, and the crankcase ⑧ to the cylinder block, and then tighten new bolts ⑨ to the specified torque in the order [1], [2], and so on.

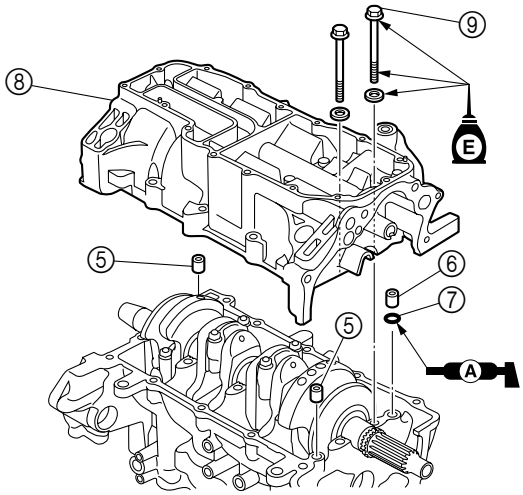

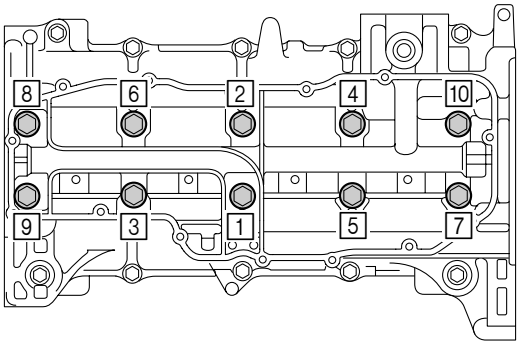

Crankcase bolt ⑨:
1st: 7.8 N·m (0.78 kgf·m, 5.6 ft·lb)

6. Loosen the bolts ⑨ in the order [1], [2], and so on.

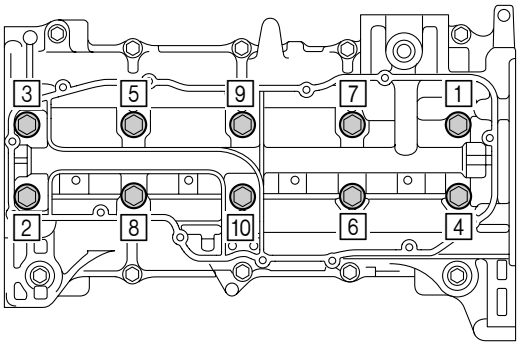

7. Tighten the bolts ⑨ to the specified torques in the order [1], [2], and so on.

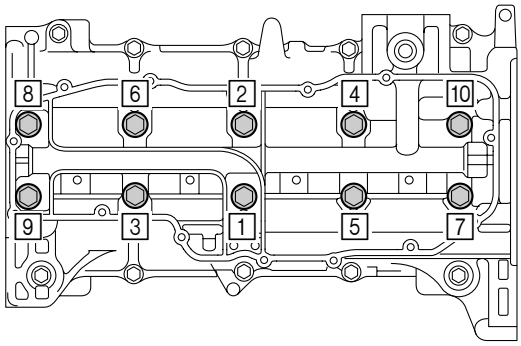

Crankcase bolt ⑨:
2nd: 14.7 N·m (1.47 kgf·m, 10.6 ft·lb)
3rd: 50°

8. Tighten the bolts ⑩, ⑪, and ⑫ to the specified torque in the order [11], [12], and so on.

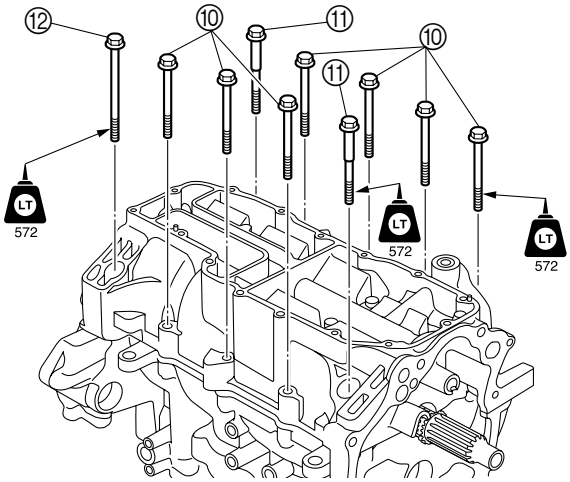

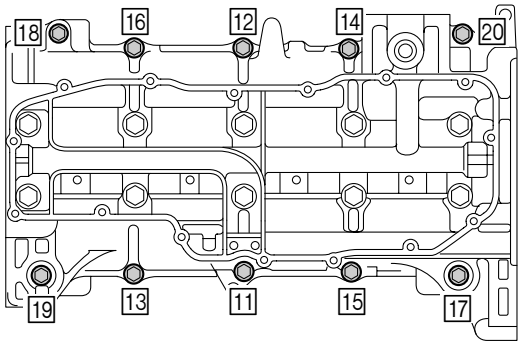

Crankcase bolt ⑩, ⑪, and ⑫:
12 N·m (1.2 kgf·m, 8.9 ft·lb)

Oil pan installation

1. Install the dowel pins ①, a new gasket ②, and the oil pan ③ and then tighten the bolts ④ to the specified torque in the order [1], [2], and so on. ***NOTICE:*** **Do not reuse a gasket, always replace it with a new one.**

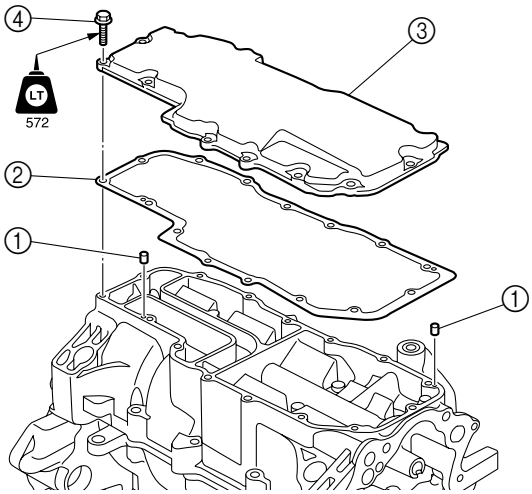

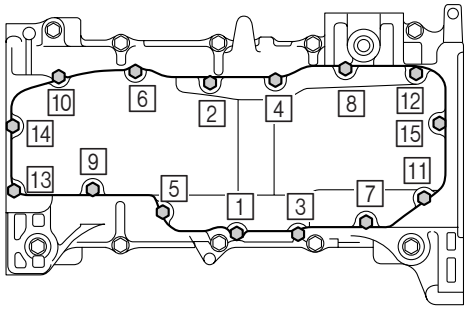

Oil pan bolt ④: 12 N·m (1.2 kgf·m, 8.9 ft·lb)

Stud bolt installation

1. Install the stud bolts ① at the specified installation heights so that the ends with the shorter threaded sections ⓐ are facing up.

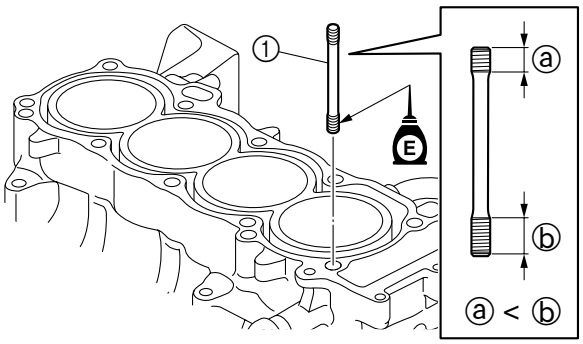

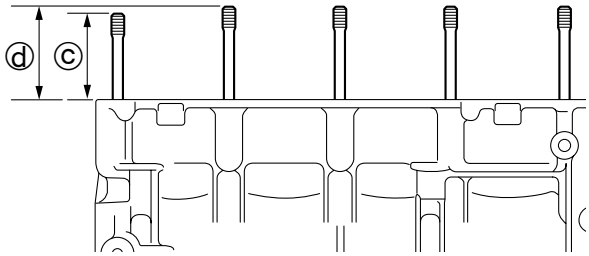

Stud bolt installation height: ⓒ: 62.7 mm (2.47 in) ⓓ: 68.7 mm (2.70 in)

TIP:

Install the 2 stud bolts that are near the flywheel magneto at the installation height ⓒ and install the remaining 8 bolts at the installation height ⓓ.

Oil filter bolt installation

1. Install the oil filter bolt ①, and then tighten it to the specified torque.

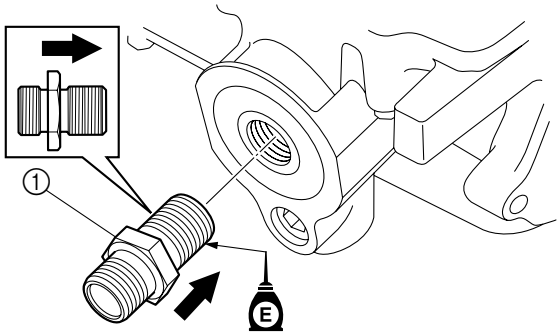

Oil filter bolt ①: 35 N·m (3.5 kgf·m, 25.8 ft·lb)

Electrical part and anode installation

NOTICE

Do not reuse a gasket, always replace it with a new one.

1. Install the oil pressure switch ①, and then tighten it to the specified torque.

2. Install the oil pressure switch lead ②, and then tighten the bolt ③ to the specified torque.

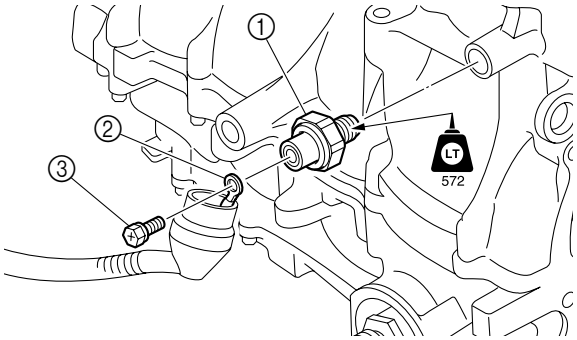

Oil pressure switch ①: 8.4 N·m (0.84 kgf·m, 6.1 ft·lb) Oil pressure switch lead bolt ③: 2 N·m (0.2 kgf·m, 1.5 ft·lb)

3. Install the gasket ④, bolt ⑤ to the anode cover ⑥, and then tighten the bolt ⑤ to the specified torque.

4. Install the grommet ⑦, and then install the anode ⑧ until it contacts the anode cover ⑥. ***NOTICE:*** **Do not reuse a grommet, always replace it with a new one.**

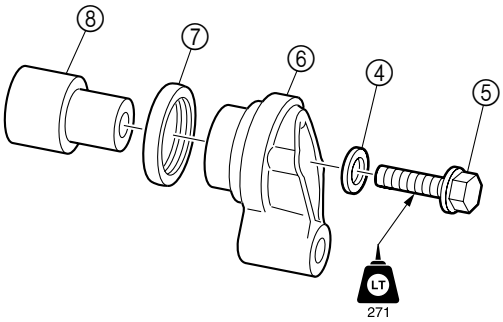

Anode bolt ⑤: 12 N·m (1.2 kgf·m, 8.9 ft·lb)

5. Install the anode cover ⑥, and then tighten the bolt ⑨ to the specified torque. ***NOTICE:*** **Do not apply grease, oil, or paint to the anode.**

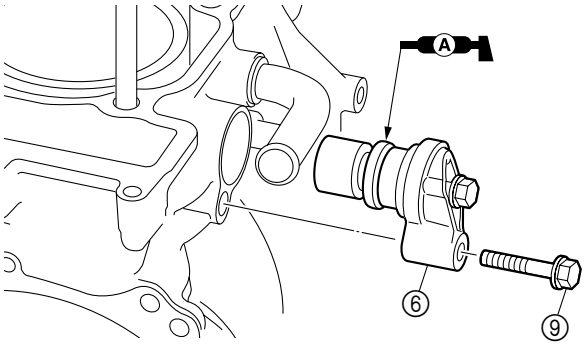

Anode cover bolt ⑨: 20 N·m (2.0 kgf·m, 14.8 ft·lb)

6. Install a new gasket ⑩ and the engine temperature sensor ⑪, and then tighten it to the specified torque.

7. Install the thermoswitch (engine) ⑫, and then tighten the bolts ⑬ to the specified torque.

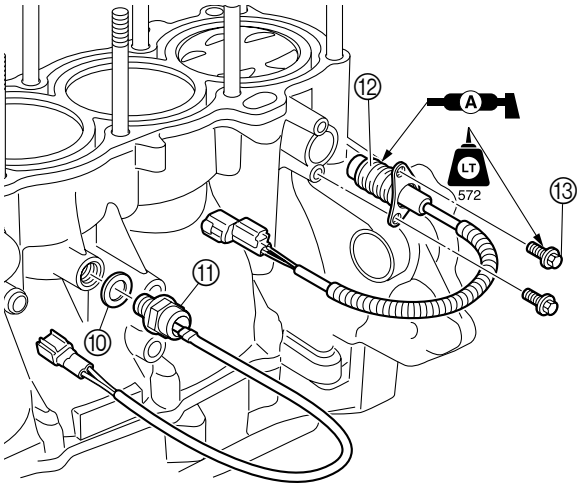

Engine temperature sensor ⑪: 15 N·m (1.5 kgf·m, 11.1 ft·lb) Thermoswitch (engine) bolt ⑬: 8 N·m (0.8 kgf·m, 5.9 ft·lb)

Timing chain and timing chain guide (intake side) installation

1. Pass the timing chain ① through the timing chain cavity.

2. Install the timing chain ①, timing chain guide (intake side) ②, and pin ③.

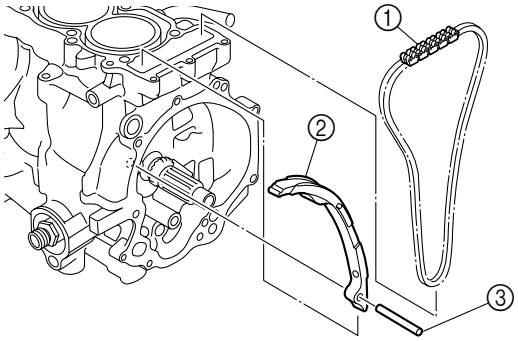

— MEMO —

Jet pump unit

Intake grate and ride plate

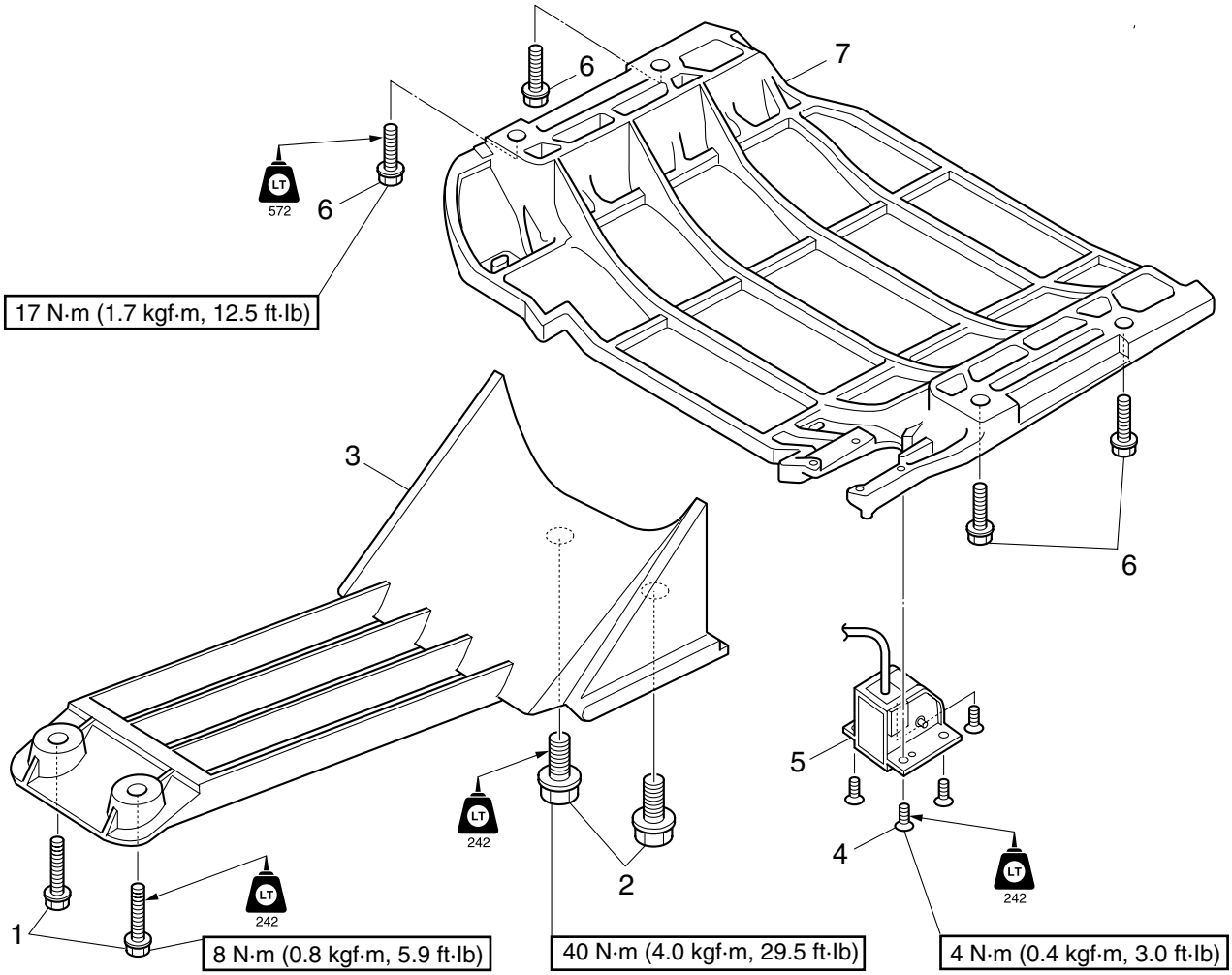

No.	Part name	Q'ty	Remarks
1	Bolt	2	M6 × 30 mm
2	Bolt	2	M10 × 25 mm
3	Intake grate	1	
4	Screw	4	ø5 × 12 mm
5	Speed sensor	1	
6	Bolt	4	M8 × 35 mm
7	Ride plate	1	

Jet pump unit

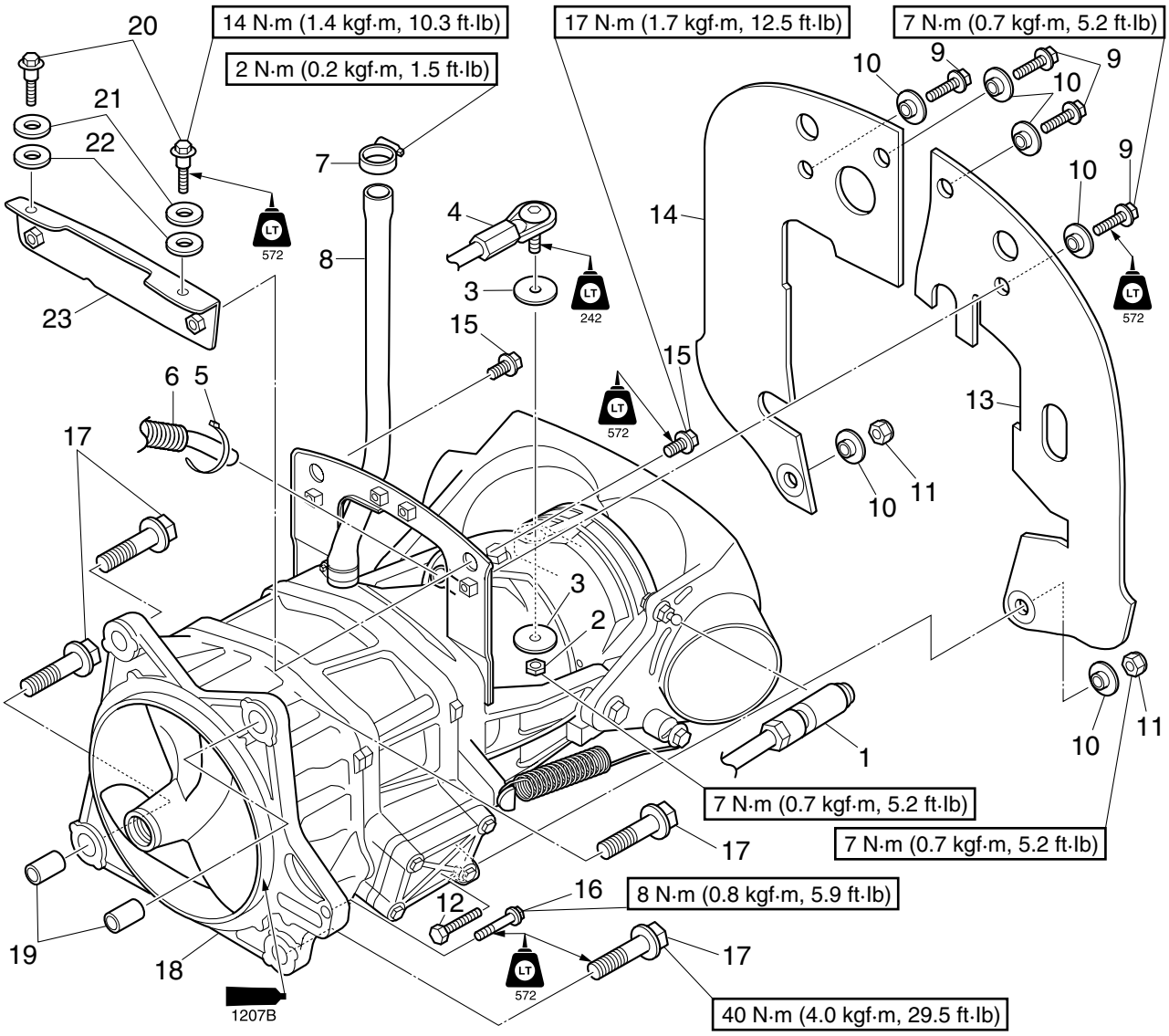

No.	Part name	Q'ty	Remarks
1	Shift cable joint	1	VX Cruiser and VX Deluxe
2	Nut	1	
3	Washer	2	
4	Steering cable joint	1	
5	Band	1	**Not reusable**
6	Bilge hose	1	
7	Hose clamp	1	
8	Spout hose	1	
9	Bolt	4	M6 × 30 mm
10	Collar	6	
11	Nut	2	
12	Bolt	2	M6 × 25 mm
13	Rubber plate 1	1	
14	Rubber plate 2	1	
15	Bolt	2	M8 × 18 mm
16	Bolt	1	M6 × 30 mm

Jet pump unit

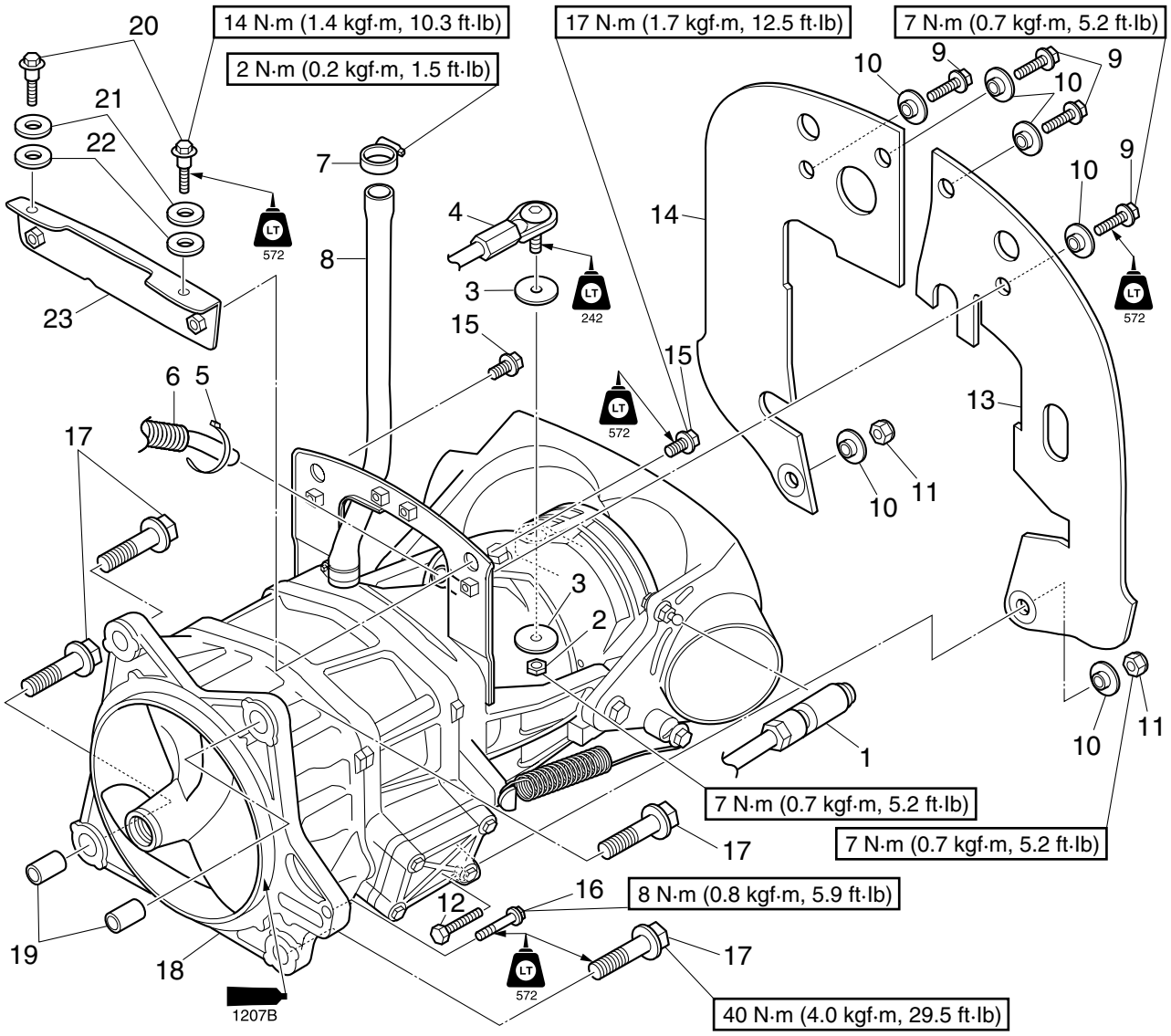

No.	Part name	Q'ty	Remarks
17	Bolt	4	M10 × 45 mm
18	Jet pump unit assy.	1	
19	Dowel pin	2	
20	Bolt	2	M8 × 13 mm
21	Washer	2	
22	Gasket	2	**Not reusable**
23	Bracket	1	

Jet pump unit removal

⚠ WARNING

Make sure to remove the battery before removing the jet pump unit.

1. Remove the intake grate ①, speed sensor ②, and ride plate ③.

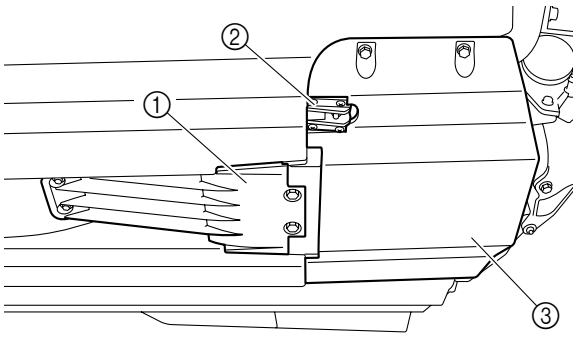

2. Disconnect the shift cable joint ④, steering cable joint ⑤, bilge hose ⑥, and spout hose ⑦.

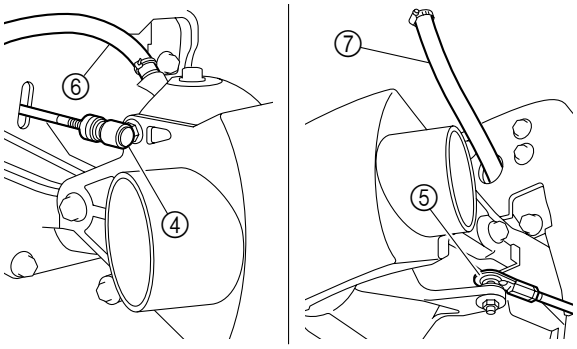

3. Remove the bolts ⑧ and nuts ⑨, and then remove the rubber plates ⑩ and ⑪.

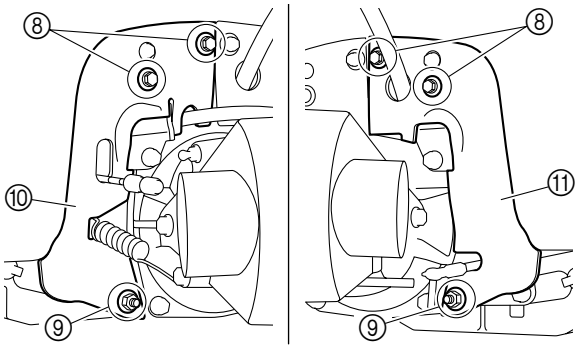

4. Remove the bolts ⑫, ⑬, and ⑭.

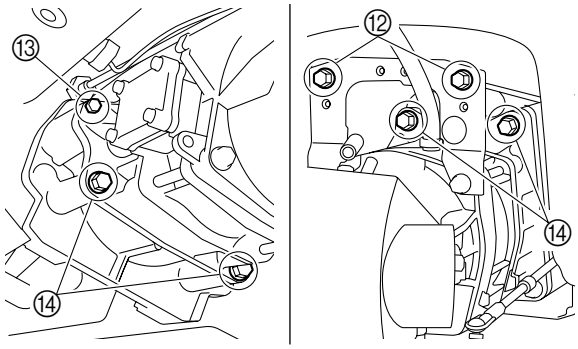

5. Remove the jet pump unit ⑮.

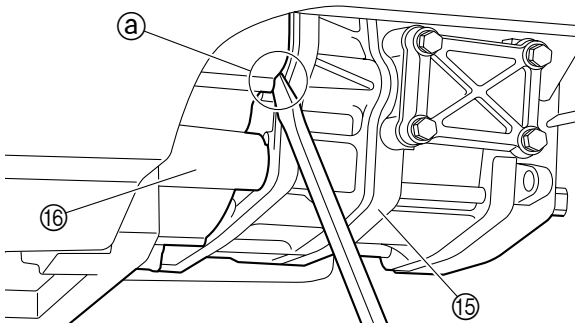

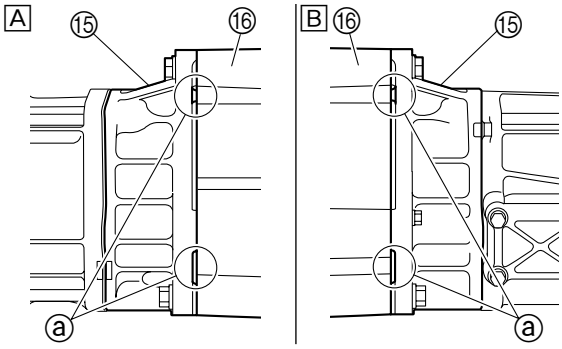

A STBD
B PORT

TIP:

Insert a flat-head screwdriver into the gaps ⓐ between the jet pump unit ⑮ and the transom plate ⑯ to separate them.

Jet pump unit installation

⚠ WARNING

Make sure to remove the battery before installing the jet pump unit.

1. Clean the mating surfaces of the jet pump unit ① and transom plate ②.

2. Apply sealant to the mating surfaces of the jet pump unit ① and transom plate ②.

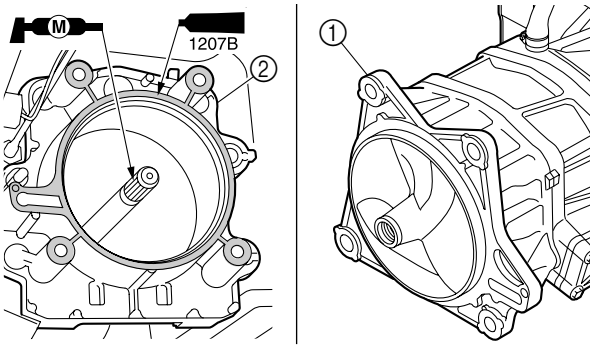

3. Install the jet pump unit ①, and then tighten the bolts ③, ④, and ⑤ to the specified torques.

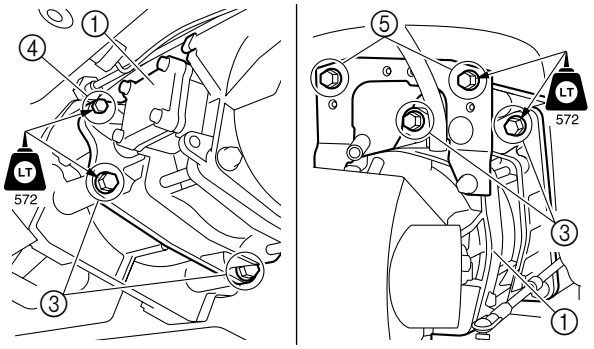

Jet pump unit assy. bolt (M10 × 45 mm) ③: 40 N·m (4.0 kgf·m, 29.5 ft·lb) Jet pump unit assy. bolt (M6 × 30 mm) ④: 8 N·m (0.8 kgf·m, 5.9 ft·lb) Jet pump unit assy. bolt (M8 × 18 mm) ⑤: 17 N·m (1.7 kgf·m, 12.5 ft·lb)

4. Install the rubber plates ⑥ and ⑦, and then tighten the bolts ⑧ and nuts ⑨ to the specified torque.

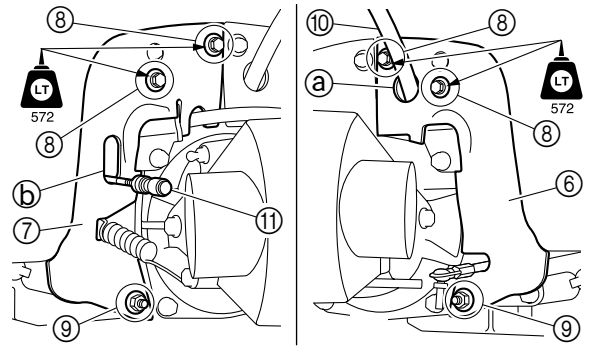

Rubber plate bolt ⑧: 7 N·m (0.7 kgf·m, 5.2 ft·lb) Rubber plate nut ⑨: 7 N·m (0.7 kgf·m, 5.2 ft·lb)

TIP:

- When installing the rubber plate ⑥, pass the spout hose ⑩ through the hole ⓐ in the plate.
- When installing the rubber plate ⑦, pass the shift cable joint ⑪ through the hole ⓑ in the plate.

5. Connect the spout hose ⑩, and then tighten the clamp ⑫ to the specified torque.

6. Connect the bilge hose ⑬, and then install a new band ⑭. ***NOTICE:*** **Do not reuse a band, always replace it with a new one.**

7. Connect the shift cable joint ⑪.

8. Connect the steering cable joint ⑮, and then tighten the nut ⑯ to the specified torque.

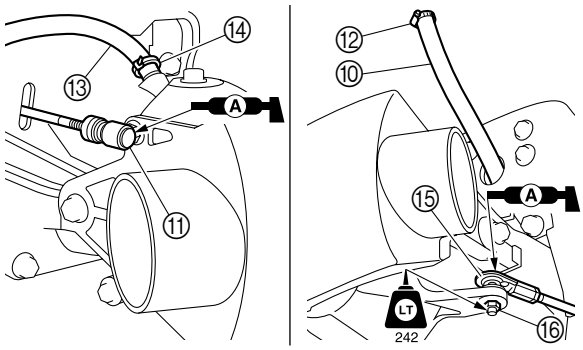

Spout hose clamp ⑫: 2 N·m (0.2 kgf·m, 1.5 ft·lb) Steering cable joint nut ⑯: 7 N·m (0.7 kgf·m, 5.2 ft·lb)

TIP:

Make sure that the steering and shifting operate correctly.

Reverse gate

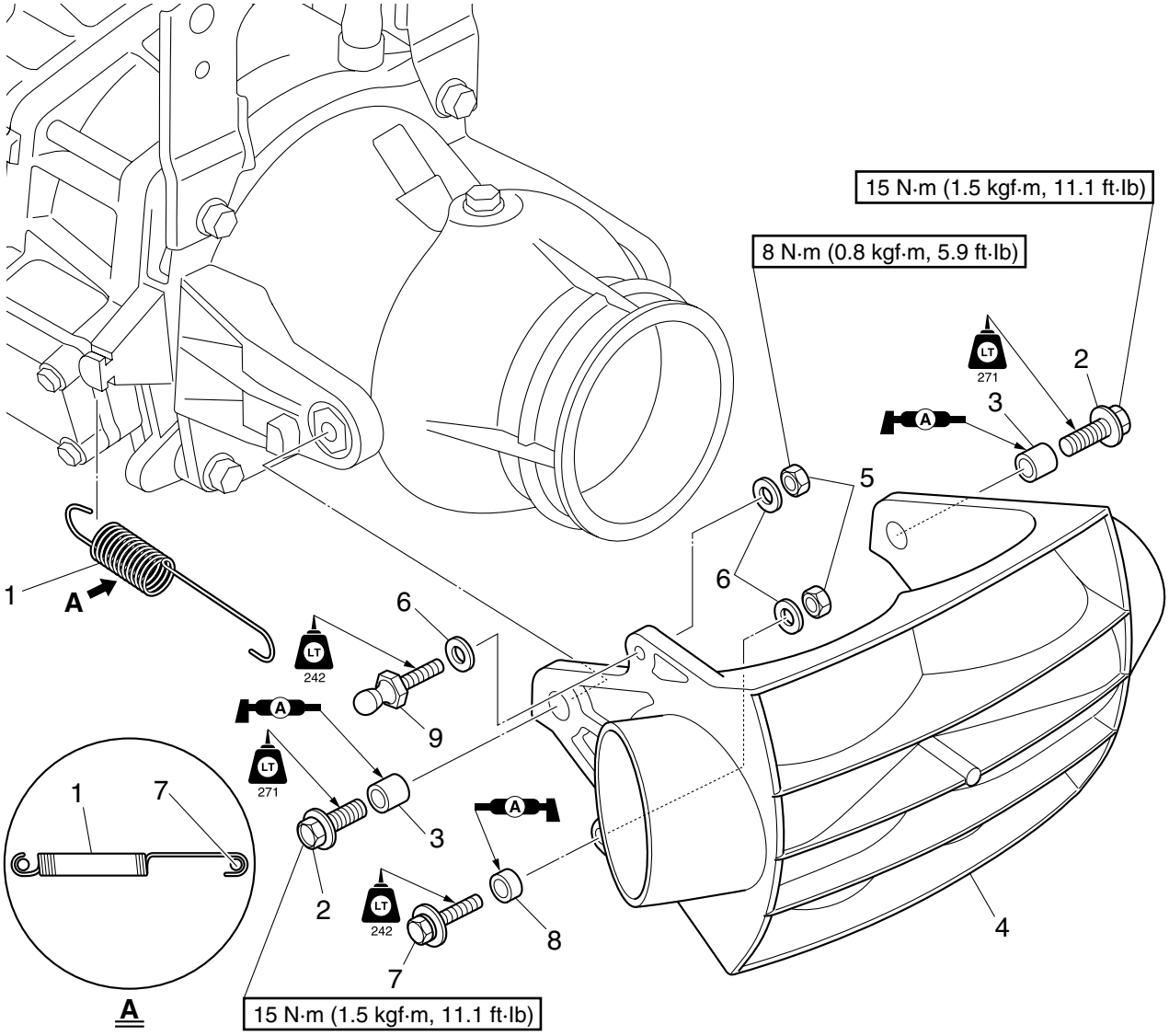

No.	Part name	Q'ty	Remarks
1	Spring	1	
2	Bolt	2	M8 × 25 mm
3	Collar	2	
4	Reverse gate	1	
5	Nut	2	
6	Washer	3	
7	Bolt	1	M6 × 35 mm
8	Collar	1	
9	Ball joint	1	

Nozzle, impeller housing, and impeller duct assy.

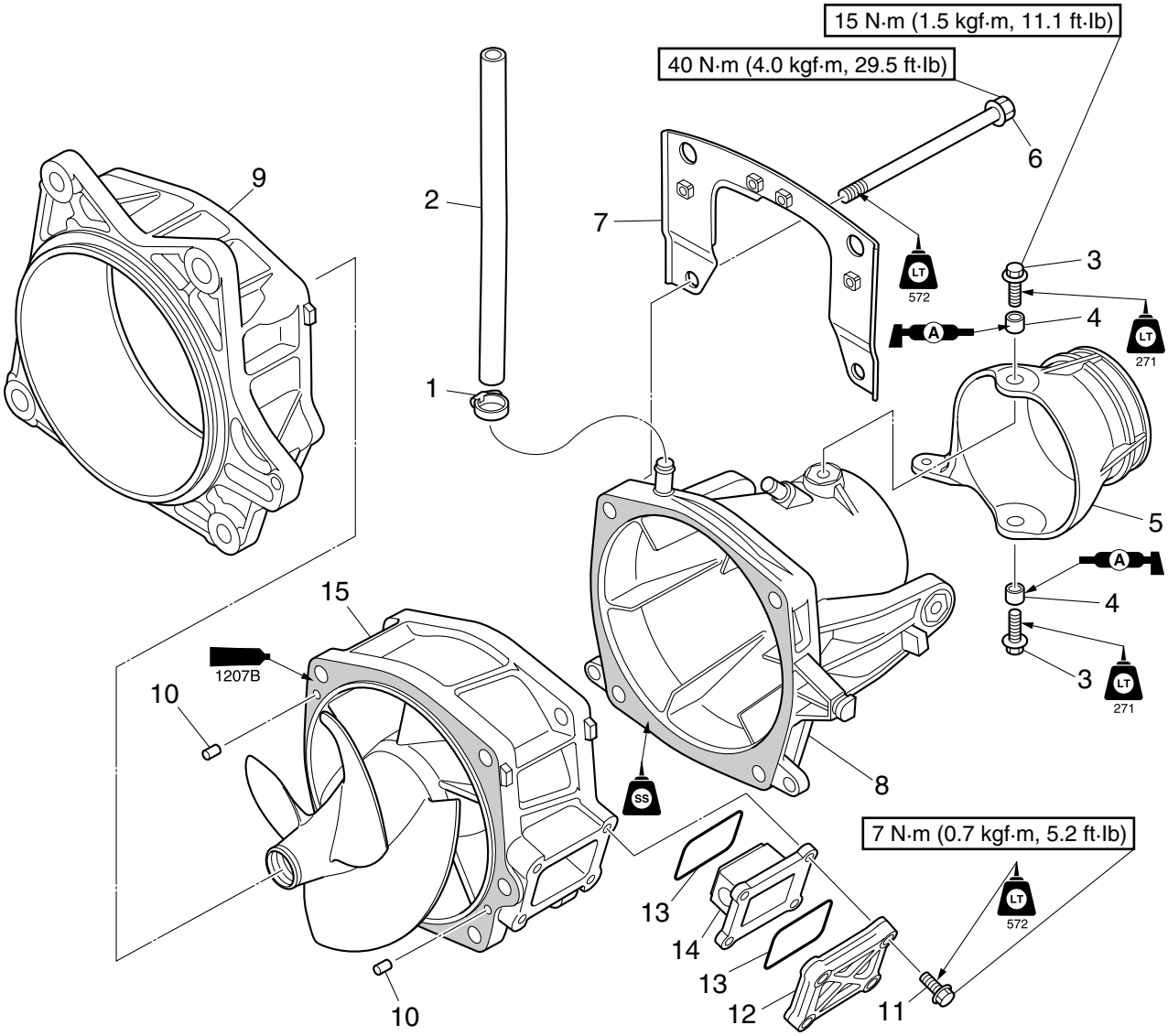

No.	Part name	Q'ty	Remarks
1	Clamp	1	
2	Spout hose	1	
3	Bolt	2	M8 × 25 mm
4	Collar	2	
5	Jet thrust nozzle	1	
6	Bolt	4	M10 × 125 mm
7	Bracket	1	
8	Nozzle	1	
9	Impeller housing	1	
10	Dowel pin	2	
11	Bolt	4	M6 × 35 mm
12	Water inlet cover	1	
13	Packing	2	**Not reusable**
14	Water inlet strainer	1	
15	Impeller duct assy.	1	

Impeller, drive shaft, and impeller duct

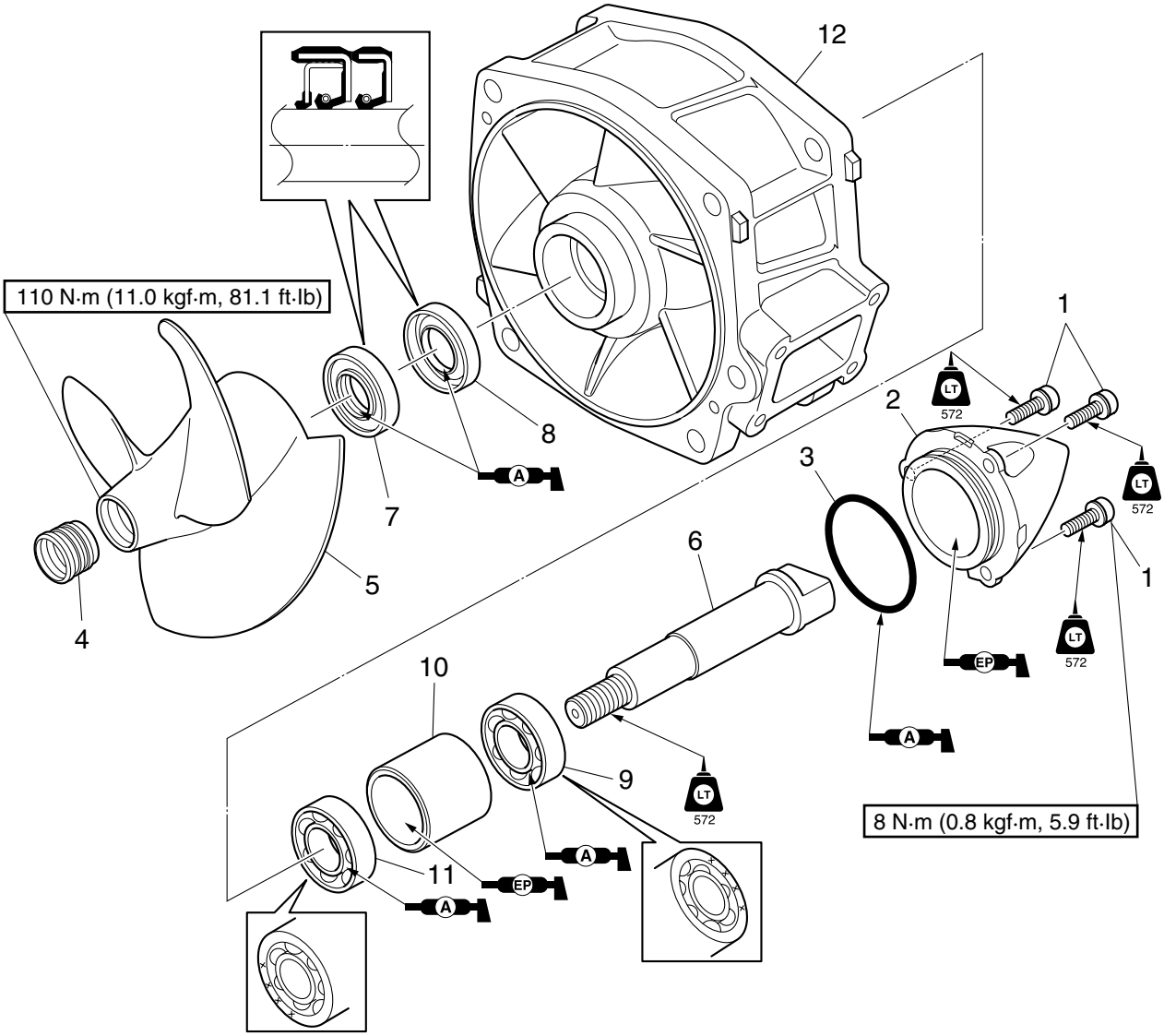

No.	Part name	Q'ty	Remarks
1	Bolt	3	M6 × 20 mm
2	Cap	1	
3	O-ring	1	**Not reusable**
4	Impeller cap	1	
5	Impeller	1	
6	Drive shaft	1	
7	Oil seal	1	**Not reusable**
8	Oil seal	1	**Not reusable**
9	Rear bearing	1	**Not reusable**
10	Spacer	1	
11	Front bearing	1	**Not reusable**
12	Impeller duct	1	

Impeller duct assy. disassembly

1. Remove the cap ①, O-ring ②, and impeller cap ③.

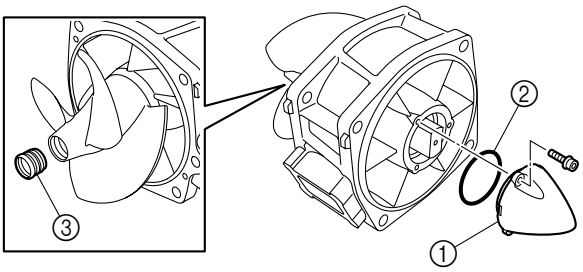

2. Remove the impeller ④.

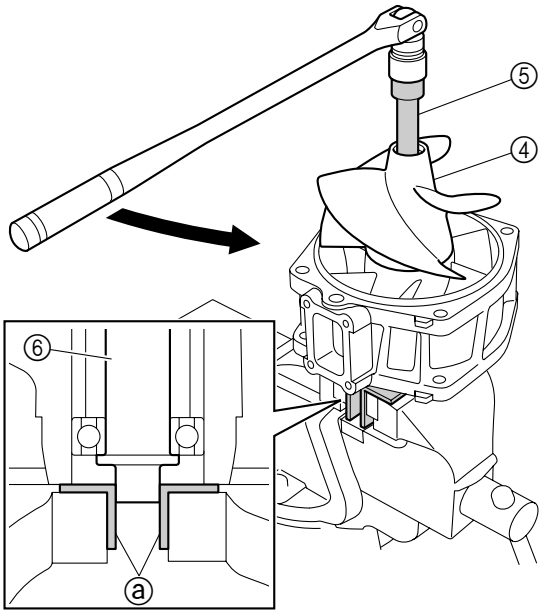

Crankshaft holder ⑤: YB-06552 Crankshaft holder 20 ⑤: 90890-06552

TIP:
Hold the drive shaft ⑥ in a vise between 2 aluminum plates ⓐ.

3. Remove the drive shaft ⑥ using a press.
   NOTICE: **Do not press the drive shaft threads directly.**

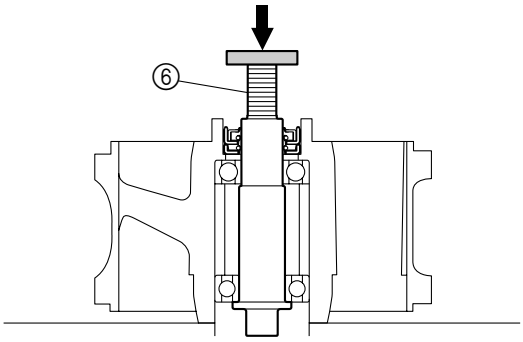

4. Remove the oil seals ⑦ and ⑧.

A

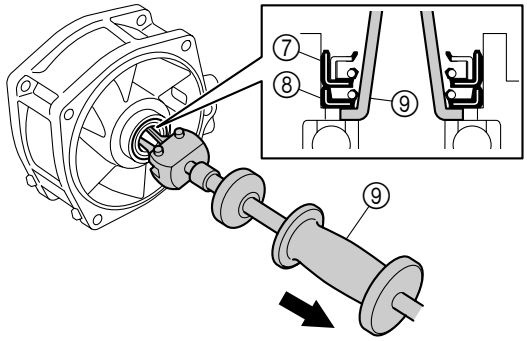

B

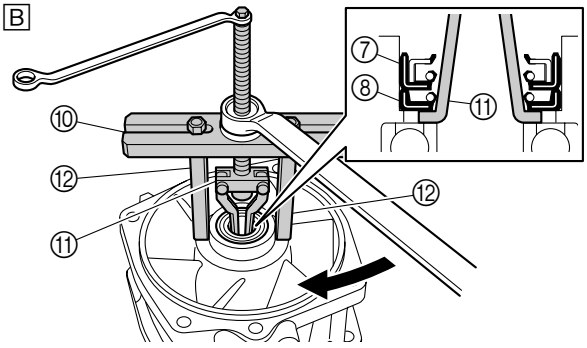

A U.S.A. and Canada
B Worldwide

Slide hammer ⑨: YB-06096 Stopper guide plate ⑩: 90890-06501 Bearing puller assembly ⑪: 90890-06535 Stopper guide stand ⑫: 90890-06538

5. Remove the rear bearing ⑬.

A

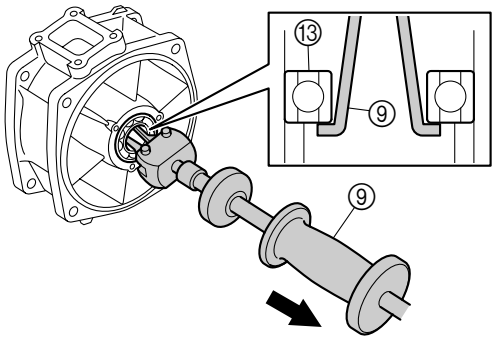

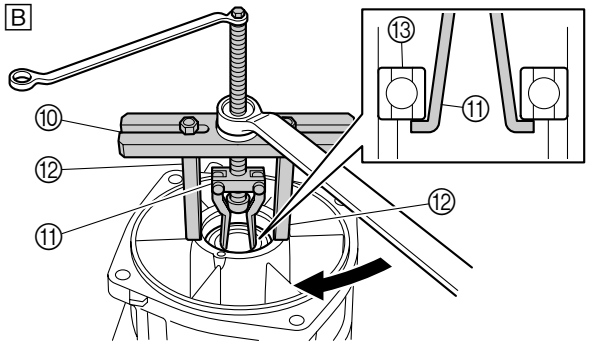

A U.S.A. and Canada
B Worldwide

Slide hammer ⑨: YB-06096 Stopper guide plate ⑩: 90890-06501 Bearing puller assembly ⑪: 90890-06535 Stopper guide stand ⑫: 90890-06538

6. Remove the spacer ⑭, and then remove the front bearing ⑮ using a press.

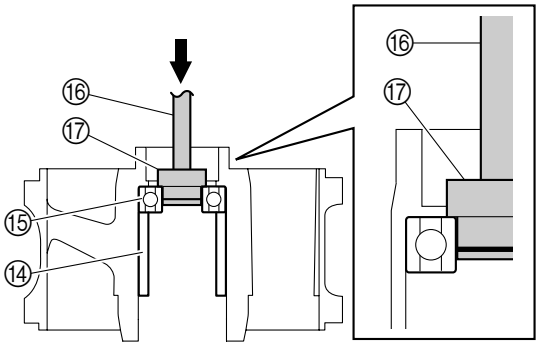

Driver handle (large) ⑯: YB-06071 Bearing housing bearing remover ⑰: YB-06112 Driver rod L3 ⑯: 90890-06652 Needle bearing attachment ⑰: 90890-06614

Impeller check

1. Check the impeller. Replace if damaged.

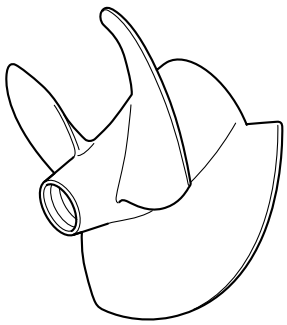

Impeller housing check

1. Measure the impeller housing inside diameter ⓐ. Replace if out of specification.

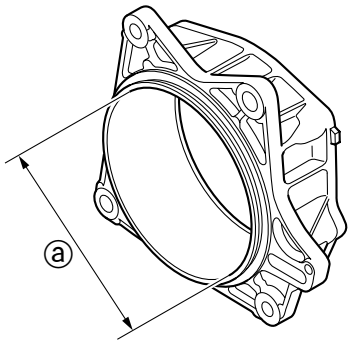

Impeller housing inside diameter ⓐ: 155.35–155.45 mm (6.116–6.120 in)

Drive shaft check

1. Check the drive shaft. Replace if cracked or damaged.

2. Measure the drive shaft runout. Replace if out of specification.

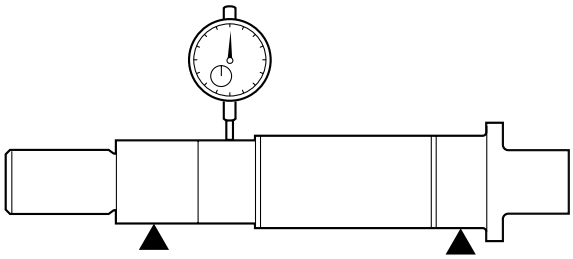

Drive shaft runout limit: 0.01 mm (0.0004 in)

Impeller duct assy. assembly

NOTICE

Do not reuse a bearing, oil seal, or O-ring, always replace it with a new one.

1. Install new oil seal ① halfway into the impeller duct, and then install new oil seal ②.

6

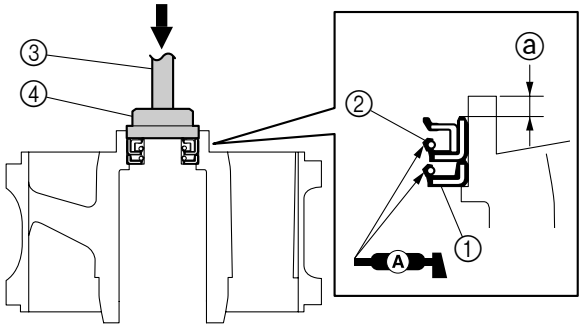

Driver handle (large) ③: YB-06071
Bearing cup installer ④: YB-06167
Driver rod LS ③: 90890-06606
Bearing outer race attachment ④:
90890-06628

Distance ⓐ:
4.6 ± 0.2 mm (0.18 ± 0.01 in)

2. Install a new rear bearing ⑤ onto the drive shaft ⑥ with a press and pipe.

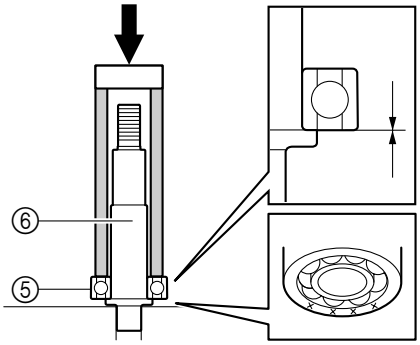

TIP:
Press the rear bearing ⑤ using a pipe that is more than 140 mm (5.51 in) long and has an inner diameter of approximately 26 mm (1.02 in).

3. Install the spacer ⑦ in the drive shaft ⑥.

4. Add EPNOC grease AP #0 to the space between the drive shaft ⑥ and the spacer ⑦.

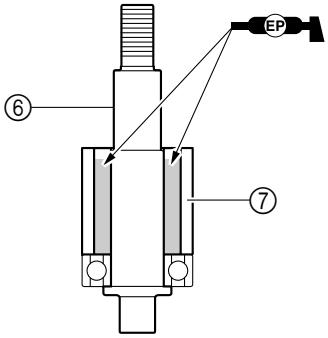

Grease quantity: 20 g (0.7 oz)

5. Install a new front bearing ⑧ onto the drive shaft ⑥ with a press and pipe.

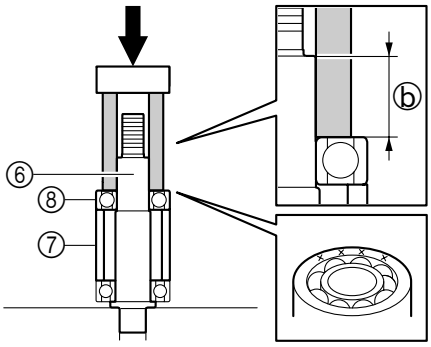

Distance ⓑ:
23 ± 0.1 mm (0.91 ± 0.01 in)

TIP:
Press the spacer ⑦ and front bearing ⑧ using a pipe that is more than 60 mm (2.36 in) long and has an inner diameter or more than 26 mm (1.02 in).

6. Install the drive shaft (with the front bearing, spacer, and rear bearing) to the impeller duct ⑨.

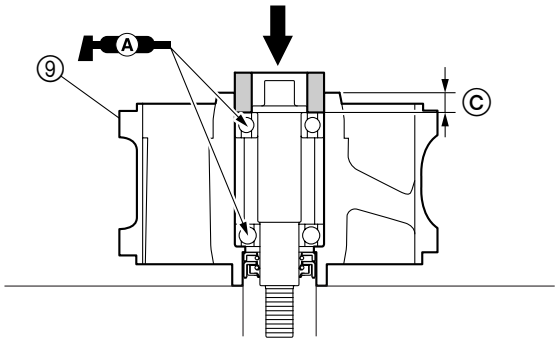

Distance ⓒ:
12.1 ± 0.2 mm (0.48 ± 0.01 in)

TIP:
Press the rear bearing using a washer or pipe that has an outer diameter of approximately 50 mm (1.97 in) and an inner diameter of approximately 33 mm (1.30 in).

7. Install the impeller ⑩, and then tighten it to the specified torque.

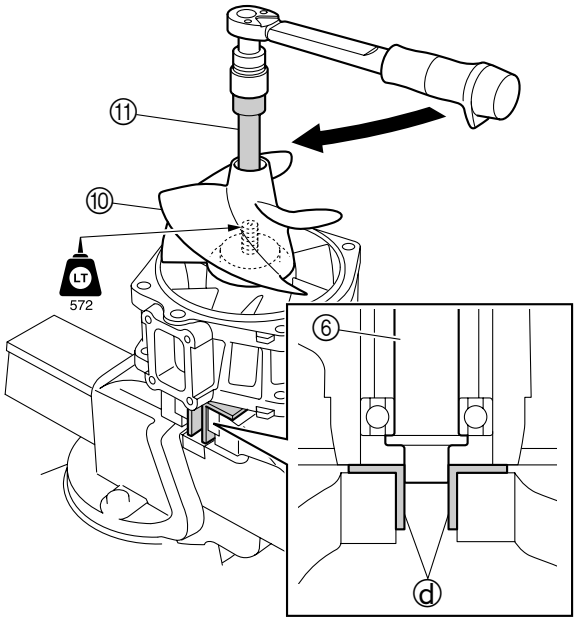

Crankshaft holder ⑪: YB-06552 Crankshaft holder 20 ⑪: 90890-06552

Impeller ⑩: 110 N·m (11.0 kgf·m, 81.1 ft·lb)

TIP:
Hold the drive shaft ⑥ in a vise between 2 aluminum plates ⓓ.

8. Install the impeller cap ⑫.

9. Add EPNOC grease AP #0 to the inside of the cap ⑬, and then install the cap ⑬ and a new O-ring ⑭.

10. Tighten the bolts ⑮ to the specified torque.

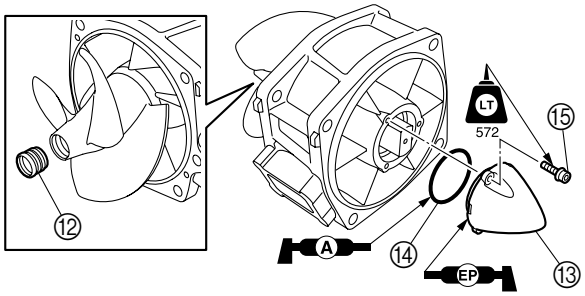

Grease quantity: 20 g (0.7 oz)

Cap bolt ⑮: 8 N·m (0.8 kgf·m, 5.9 ft·lb)

Impeller duct, impeller housing and nozzle installation

1. Clean the mating surfaces of the impeller duct assy. ①, impeller housing ②, and nozzle ③.

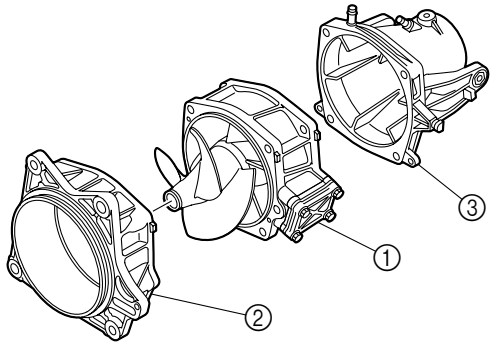

2. Apply sealant to the mating surfaces of the impeller duct assy. ① and impeller housing ②.

3. Install the dowel pins ④ to the impeller duct assy. ①, and then install the impeller housing ②.

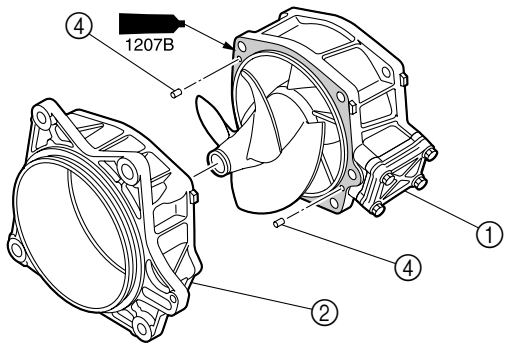

4. Apply sealant to the mating surfaces of the nozzle ③ and impeller duct assy. ①.

5. Install the nozzle ③ and bracket ⑤, and then tighten the bolts ⑥ to the specified torque.

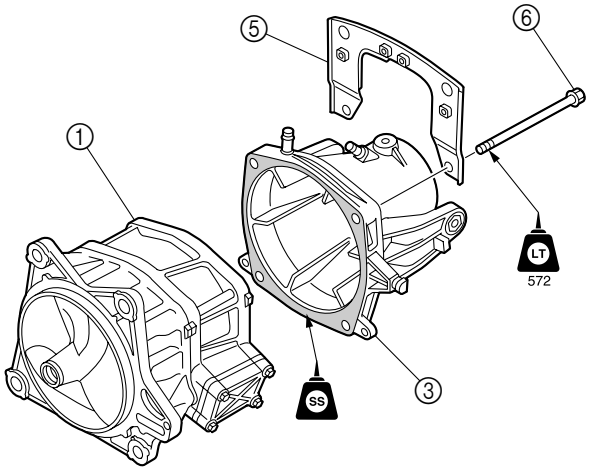

Impeller duct bolt ⑥: 40 N·m (4.0 kgf·m, 29.5 ft·lb)

Transom plate and hoses

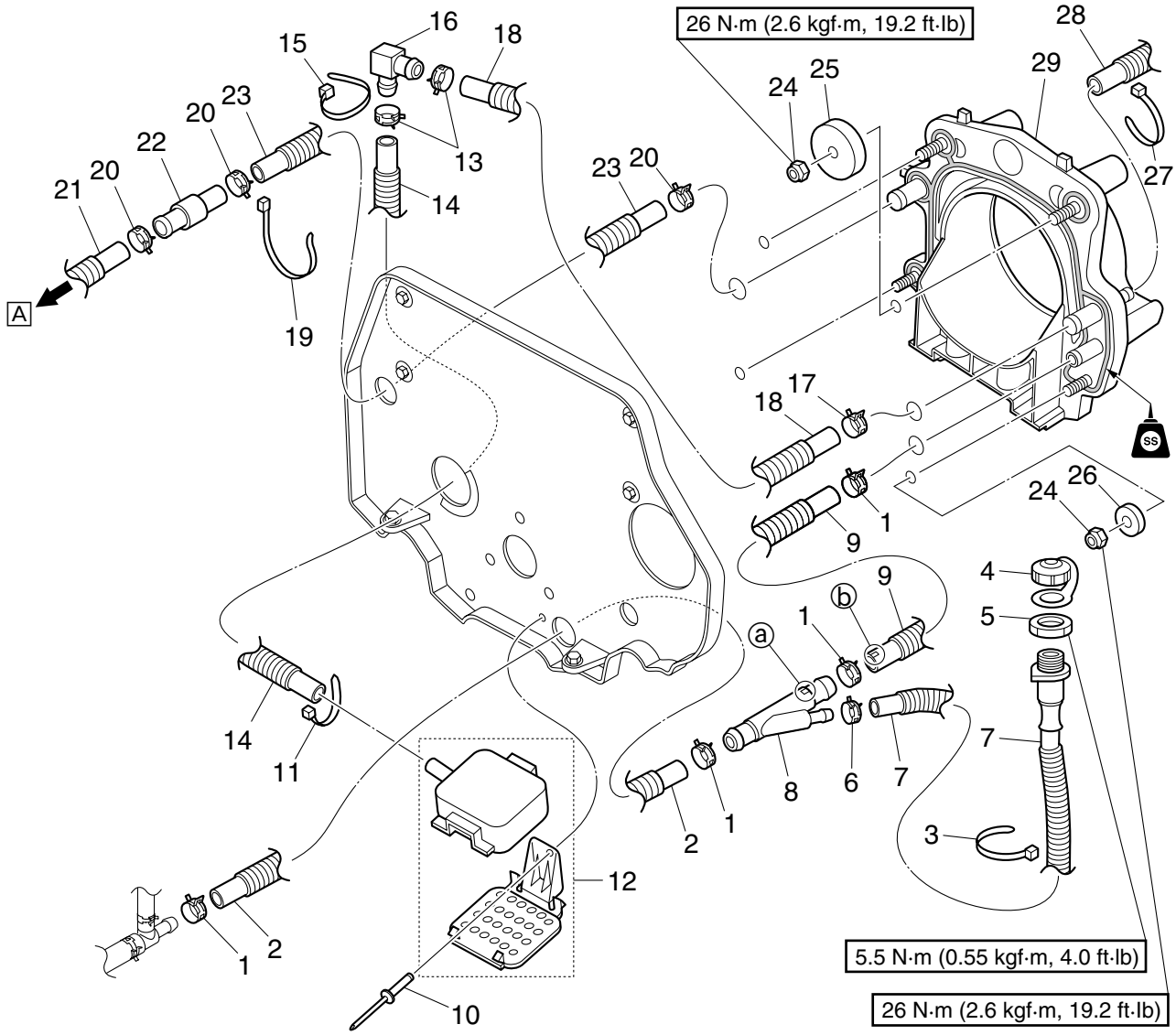

No.	Part name	Q'ty	Remarks
1	Clamp	4	
2	Cooling water hose	1	
3	Plastic tie	1	
4	Cap	1	
5	Nut	1	
6	Clamp	1	
7	Flushing hose	1	
8	Hose joint 1	1	ⓐ Projection
9	Cooling water hose	1	ⓑ White paint mark
10	Rivet	1	**Not reusable**
11	Band	1	**Not reusable**
12	Bilge strainer assy.	1	
13	Clamp	2	
14	Bilge hose	1	
15	Plastic tie	1	
16	Hose joint	1	

Jet pump unit

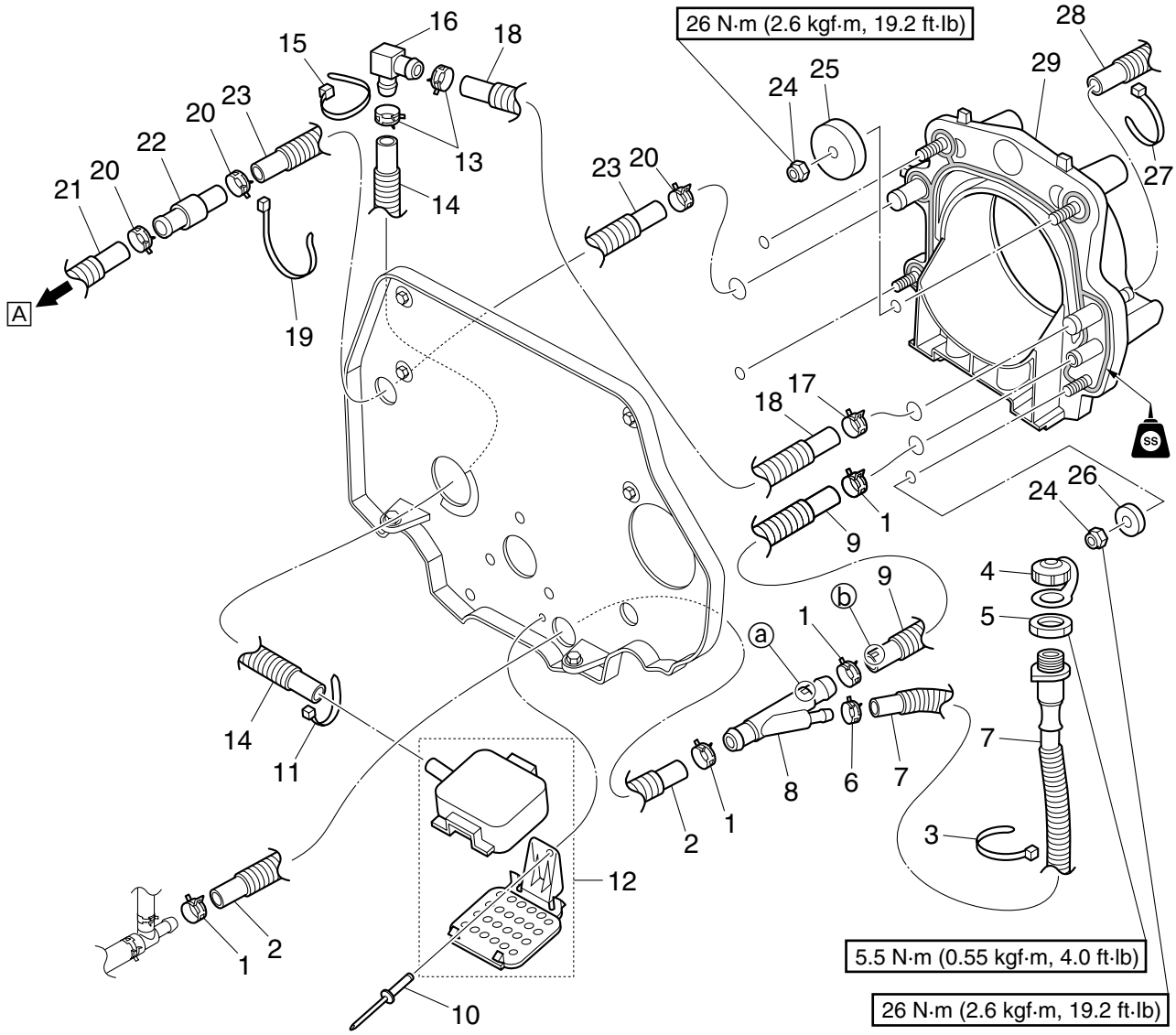

No.	Part name	Q'ty	Remarks
17	Clamp	1	
18	Bilge hose	1	
19	Band	1	**Not reusable**
20	Clamp	3	
21	Cooling water hose	1	A To cylinder head
22	Hose joint	1	
23	Cooling water hose	1	
24	Nut	4	
25	Washer	2	
26	Washer	2	
27	Band	1	**Not reusable**
28	Bilge hose	1	
29	Transom plate	1	

Water hose check

1. Check the bilge hoses and cooling water hoses. Replace if cracked or damaged.

Hose joint check

1. Check the hose joints. Replace if cracked or damaged.

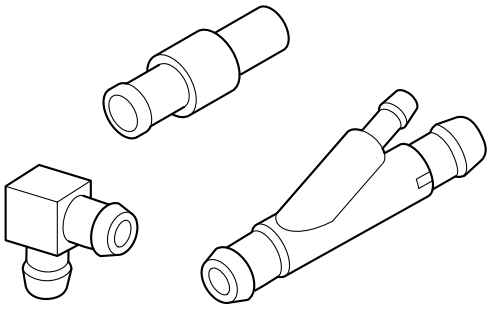

Bilge strainer check

1. Check the bilge strainer. See “Bilge strainer check” (3-14).

Transom plate installation

1. Clean the mating surfaces of the transom plate ①.

2. Apply silicone sealant to the mating surface of the transom plate ①.

3. Install the transom plate ①, washer ②, and ③, and then tighten the nuts ④ to the specified torque.

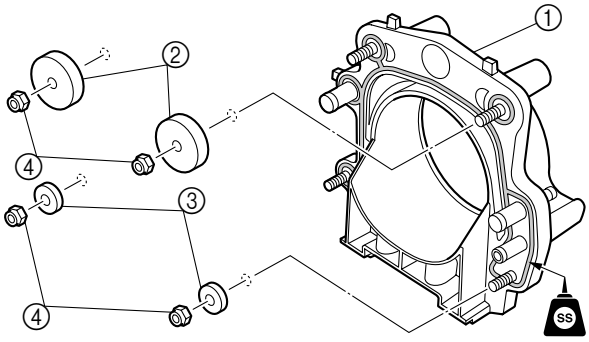

Transom plate nut ④: 26 N·m (2.6 kgf·m, 19.2 ft·lb)

6

Intermediate housing

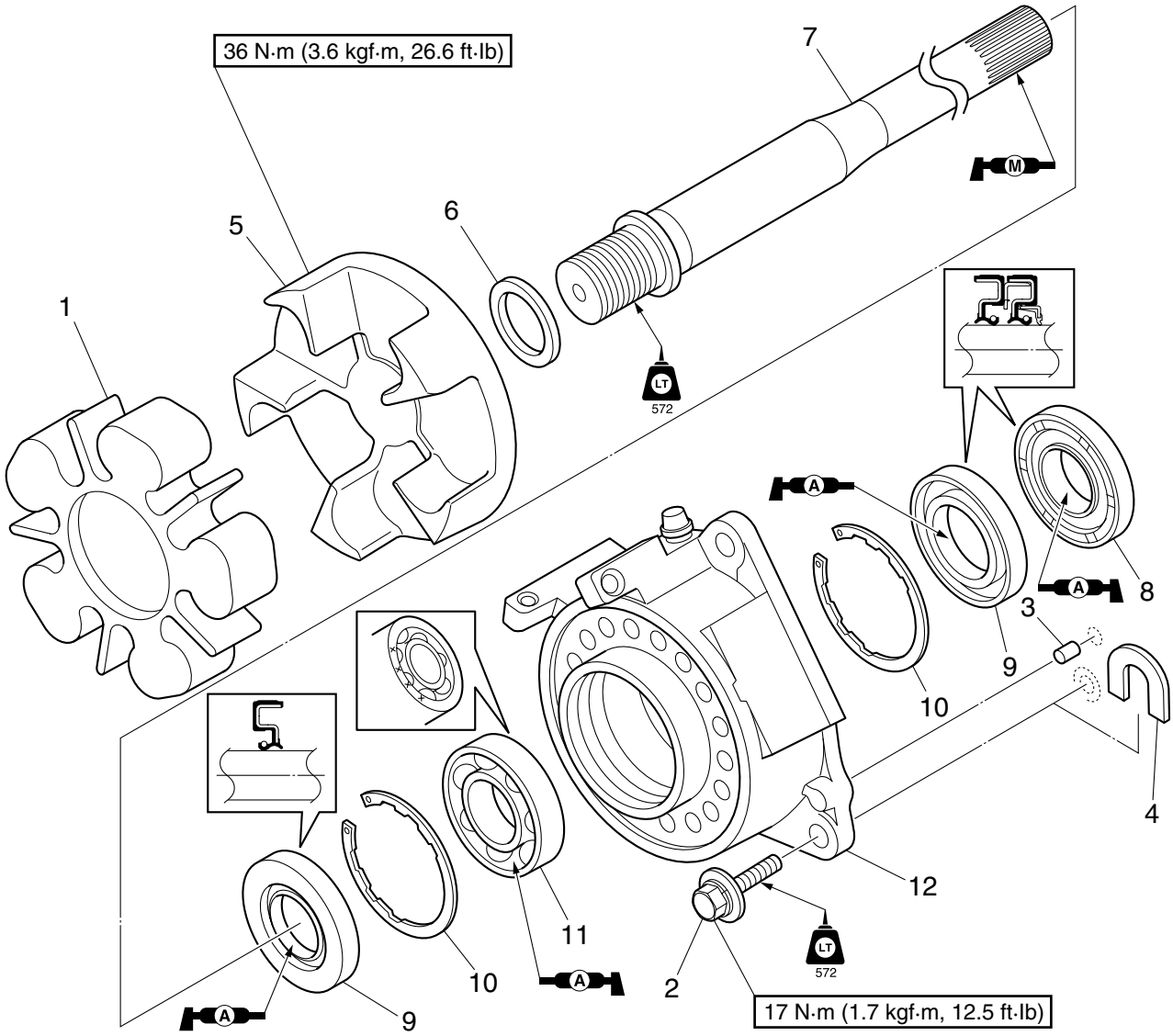

No.	Part name	Q'ty	Remarks
	Engine unit		See "Engine unit" (5-1).
1	Rubber coupling	1	
2	Bolt	3	M8 × 25 mm
3	Dowel pin	2	
4	Shim	*	
5	Driven coupling	1	
6	Washer	1	
7	Intermediate drive shaft	1	
8	Oil seal	1	**Not reusable**
9	Oil seal	2	**Not reusable**
10	Circlip	2	
11	Bearing	1	**Not reusable**
12	Intermediate housing	1	

*: As required.

Intermediate housing assy. removal

1. Remove the engine unit. See “Engine unit removal” (5-5).

2. Remove the intermediate housing assy. ①.

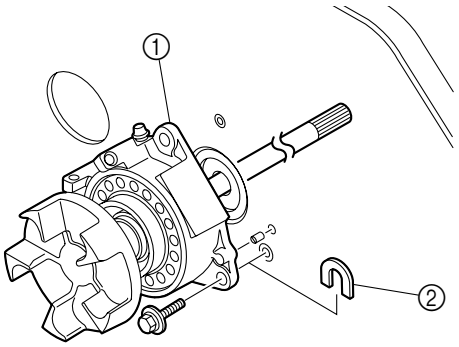

TIP:

If shims ② are installed, remove the shims and make a note of the position of each removed shim so that it can be installed in its original position.

Intermediate housing assy. disassembly

1. Remove the driven coupling ①.

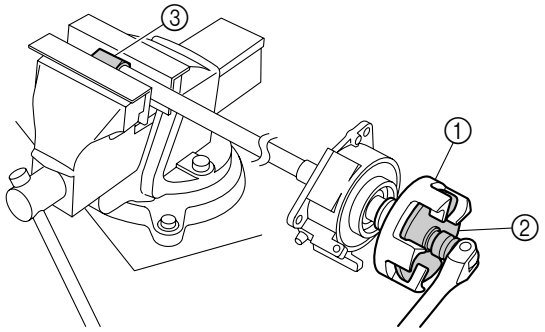

Coupler wrench ②: YW-06551/90890-06551 Driveshaft holder ③: YB-06151 Drive shaft holder 5 ③: 90890-06519

2. Remove the intermediate drive shaft ④ using a press. ***NOTICE:*** **Do not press the drive shaft directly.**

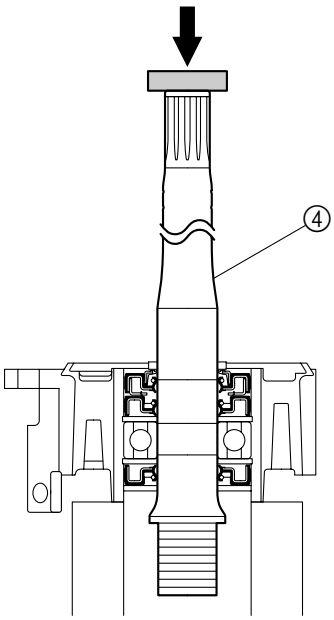

3. Remove the oil seals ⑤, ⑥, and ⑦.

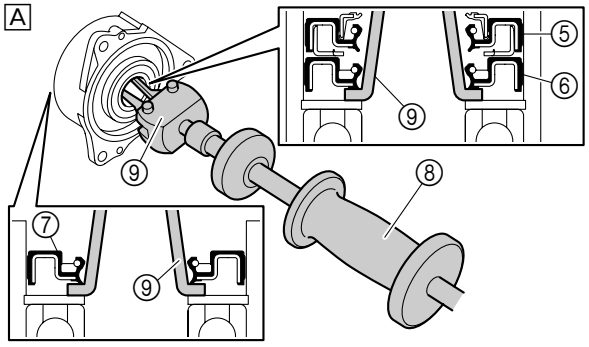

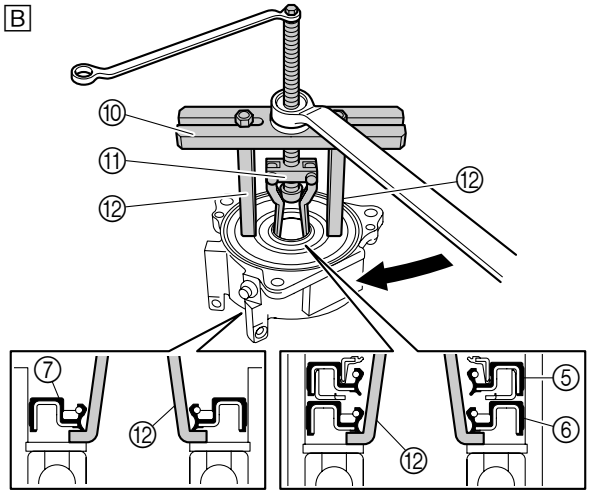

A U.S.A. and Canada
B Worldwide

Slide hammer ⑧: YB-06096
Bearing puller legs ⑨: YB-06523
Stopper guide plate ⑩: 90890-06501
Bearing puller assembly ⑪: 90890-06535
Stopper guide stand ⑫: 90890-06538

4. Remove the circlips ⑬, and then remove the bearing ⑭ using a press.

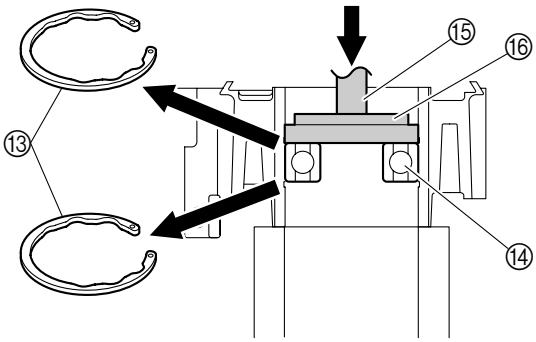

Driver handle (large) ⑮: YB-06071
Outer race installer (forward gear) ⑯: YB-06085
Driver rod LS ⑮: 90890-06606
Bearing outer race attachment ⑯: 90890-06624

Intermediate drive shaft check

1. Check the intermediate drive shaft splines. Replace if cracked or damaged.

2. Measure the intermediate drive shaft runout. Replace if out of specification.

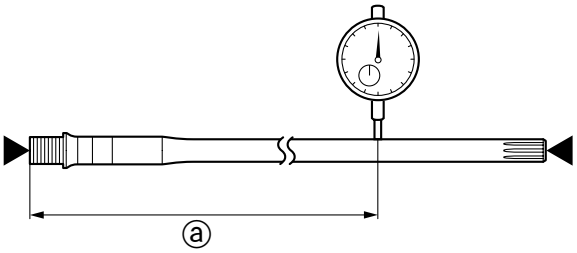

Intermediate drive shaft runout limit:
0.30 mm (0.012 in)
Measuring point ⓐ: 310 mm (12.20 in)

Driven coupling and intermediate housing check

1. Check the rubber coupling ①, drive coupling ②, and intermediate housing ③. Replace if cracked or damaged.

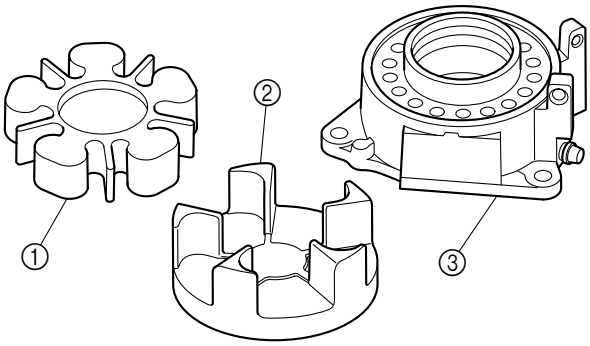

Intermediate housing assy. assembly

NOTICE

Do not reuse a bearing, or oil seal, always replace it with a new one.

1. Install the circlip (rear) ①.

2. Install a new bearing ② until it contacts the circlip (rear) ① using a press.

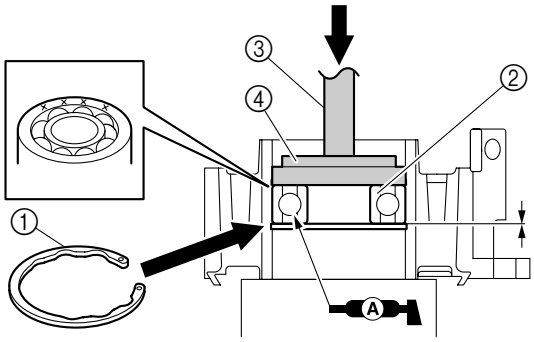

Driver handle (large) ③: YB-06071
Oil seal installer ④: YB-06085
Driver rod LS ③: 90890-06606
Bearing outer race attachment ④: 90890-06624

3. Install the circlip (front) ⑤, and then install a new oil seal ⑥.

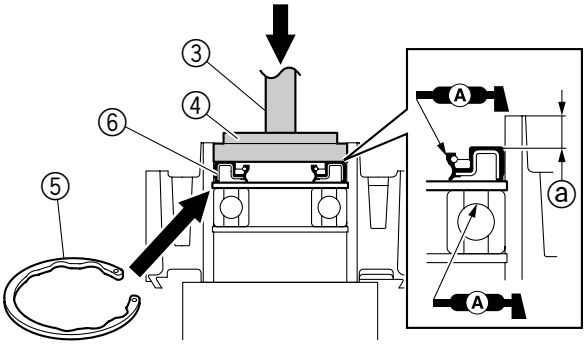

Driver handle (large) ③: YB-06071
Outer race installer (forward gear) ④: YB-06085
Driver rod LS ③: 90890-06606
Bearing outer race attachment ④: 90890-06624

Distance ⓐ: 7.0 ± 0.2 mm (0.27 ± 0.01 in)

4. Install new oil seals ⑦ and ⑧.

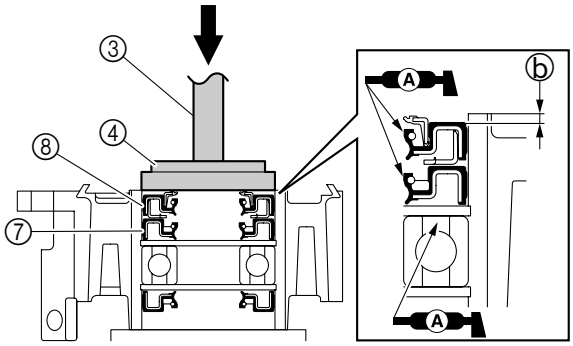

Driver handle (large) ③: YB-06071
Oil seal installer ④: YB-06085
Driver rod LS ③: 90890-06606
Bearing outer race attachment ④: 90890-06624

Distance ⓑ: 0.8 ± 0.2 mm (0.03 ± 0.01 in)

5. Install the intermediate drive shaft ⑨ using a press. ***NOTICE:*** **Do not press the drive shaft threads directly.**

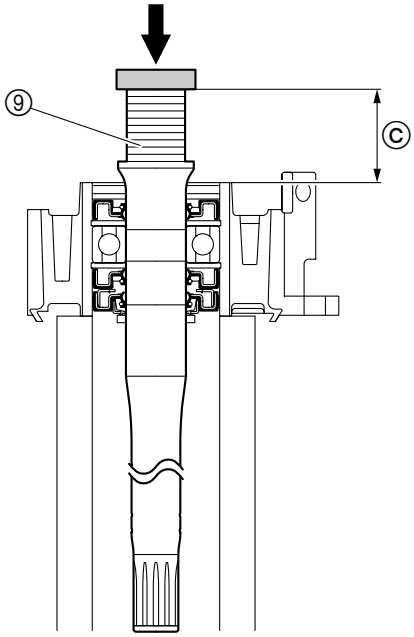

Distance ⓒ: 38.9 mm (1.53 in)

6. Install the washer ⑩, and then tighten the driven coupling ⑪ to the specified torque.

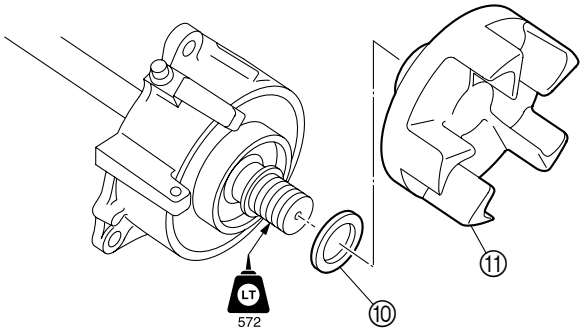

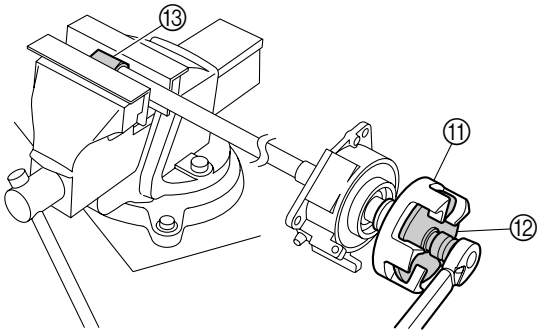

Coupler wrench ⑫: YW-06551/90890-06551
Drive shaft holder ⑬: YB-06151
Drive shaft holder 5 ⑬: 90890-06519

Driven coupling ⑪: 36 N·m (3.6 kgf·m, 26.6 ft·lb)

Intermediate housing assy. installation

1. Install the intermediate housing assy. ①, and then tighten the bolts ② to the specified torque.

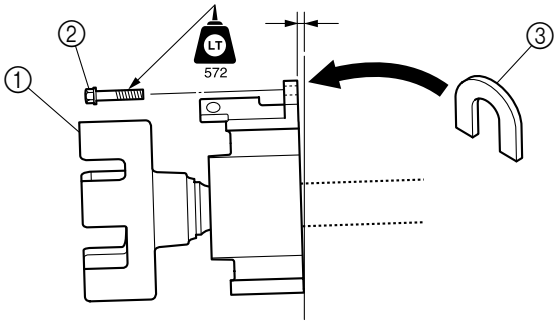

Intermediate housing assy. bolt ②: 17 N·m (1.7 kgf·m, 12.5 ft·lb)

TIP:
If shims ③ were removed, install the shims in their original positions.

2. Install the engine unit. See “Engine unit installation” (5-8).

— MEMO —

Electrical system

Electrical components

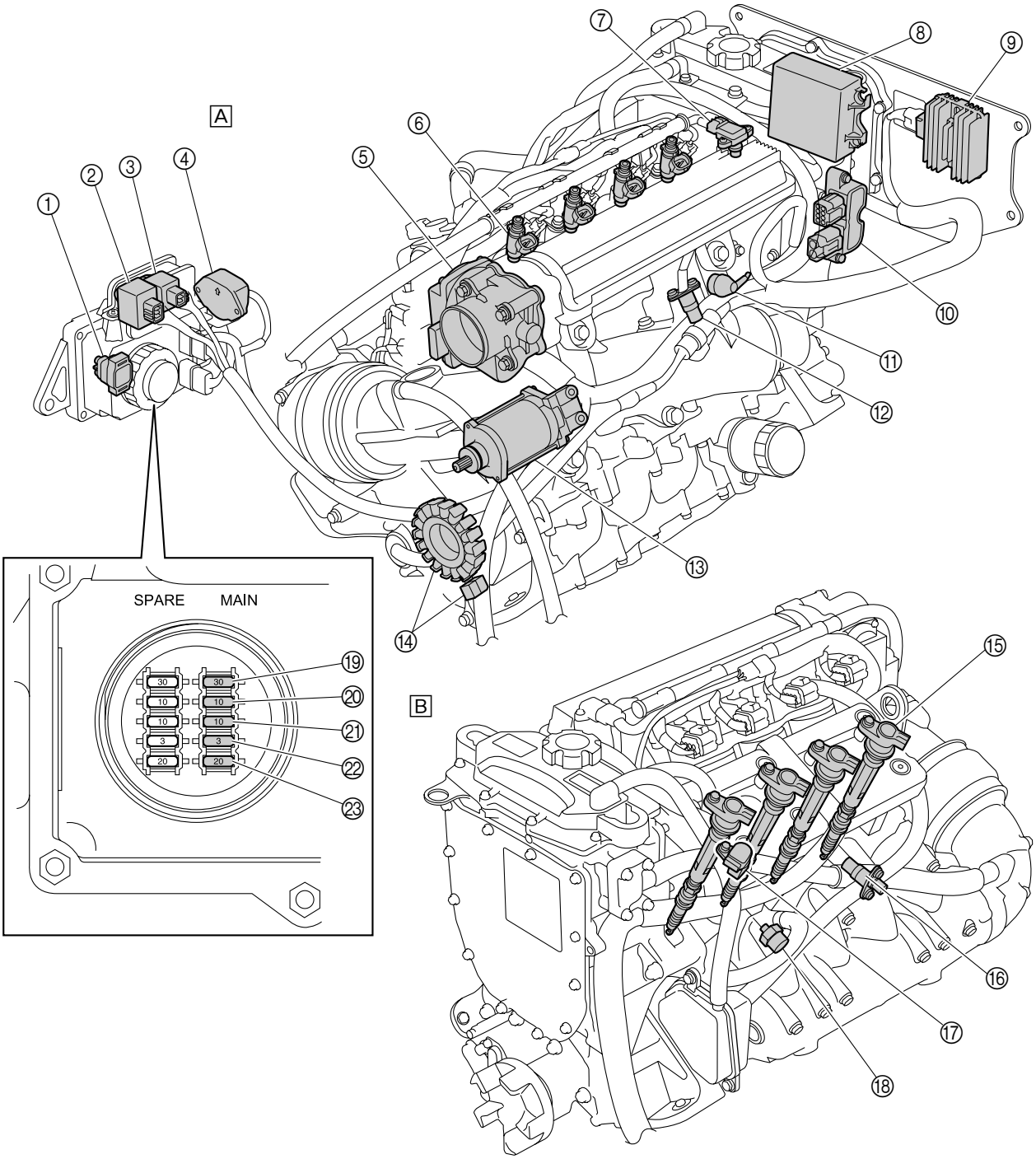

① Starter relay
② Main and fuel pump relay
③ ETV relay
④ Slant detection switch
⑤ Throttle body assy. (TPS)
⑥ Fuel injectors
⑦ Sensor assy. (intake air pressure and intake air temperature)
⑧ ECM
⑨ Rectifier regulator
⑩ Earth plate
⑪ Oil pressure switch
⑫ Thermoswitch (exhaust)
⑬ Starter motor
⑭ Stator coil and pickup coil
⑮ Spark plugs and ignition coils

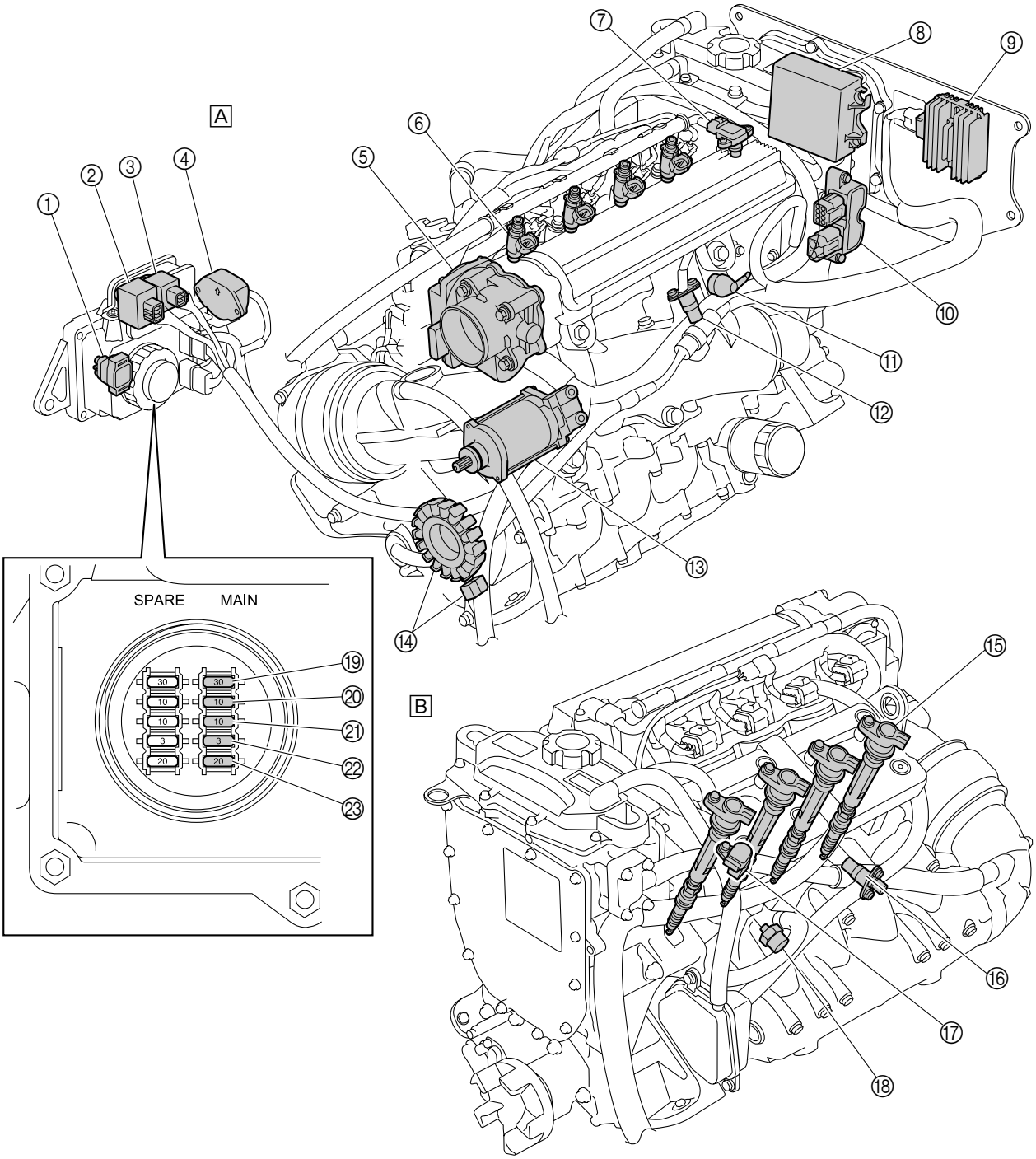

⑯ Thermoswitch (engine)
⑰ Cam position sensor
⑱ Engine temperature sensor
⑲ Fuse (30 A) (battery)
⑳ Fuse (10 A) (main and fuel pump relay)
㉑ Fuse (10 A) (ETV relay)
㉒ Fuse (3 A) (remote control receiver)
㉓ Fuse (20 A) (main and fuel pump relay)

A Port bow view
B Starboard stern view

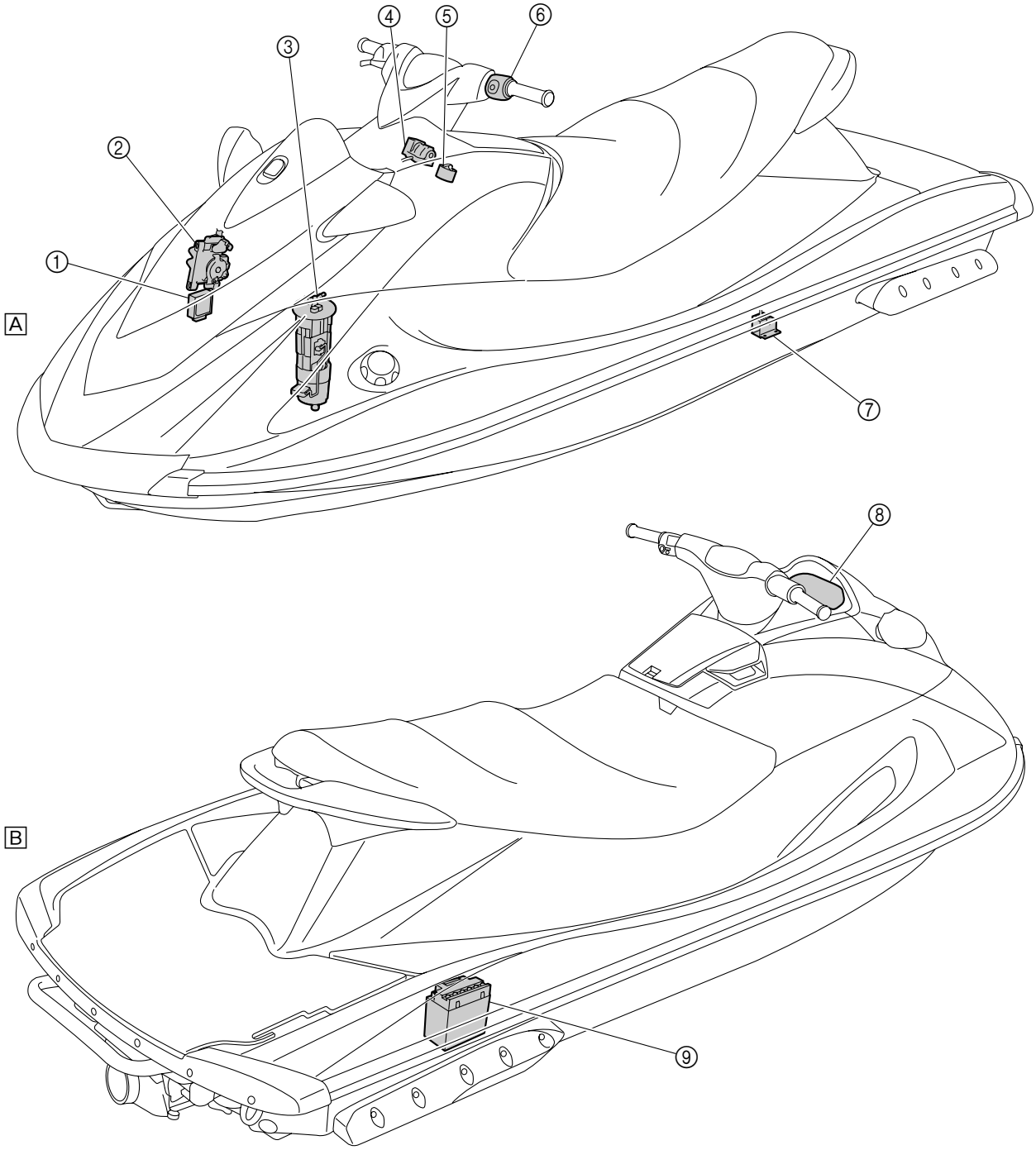

① Remote control receiver (VX Cruiser and VX Deluxe)
② APS
③ Fuel pump module and fuel sender
④ Steering sensor
⑤ Buzzer
⑥ Left handlebar switch assy.
⑦ Speed sensor
⑧ Multifunction meter
⑨ Battery

A Port bow view
B Starboard stern view

Fuse box

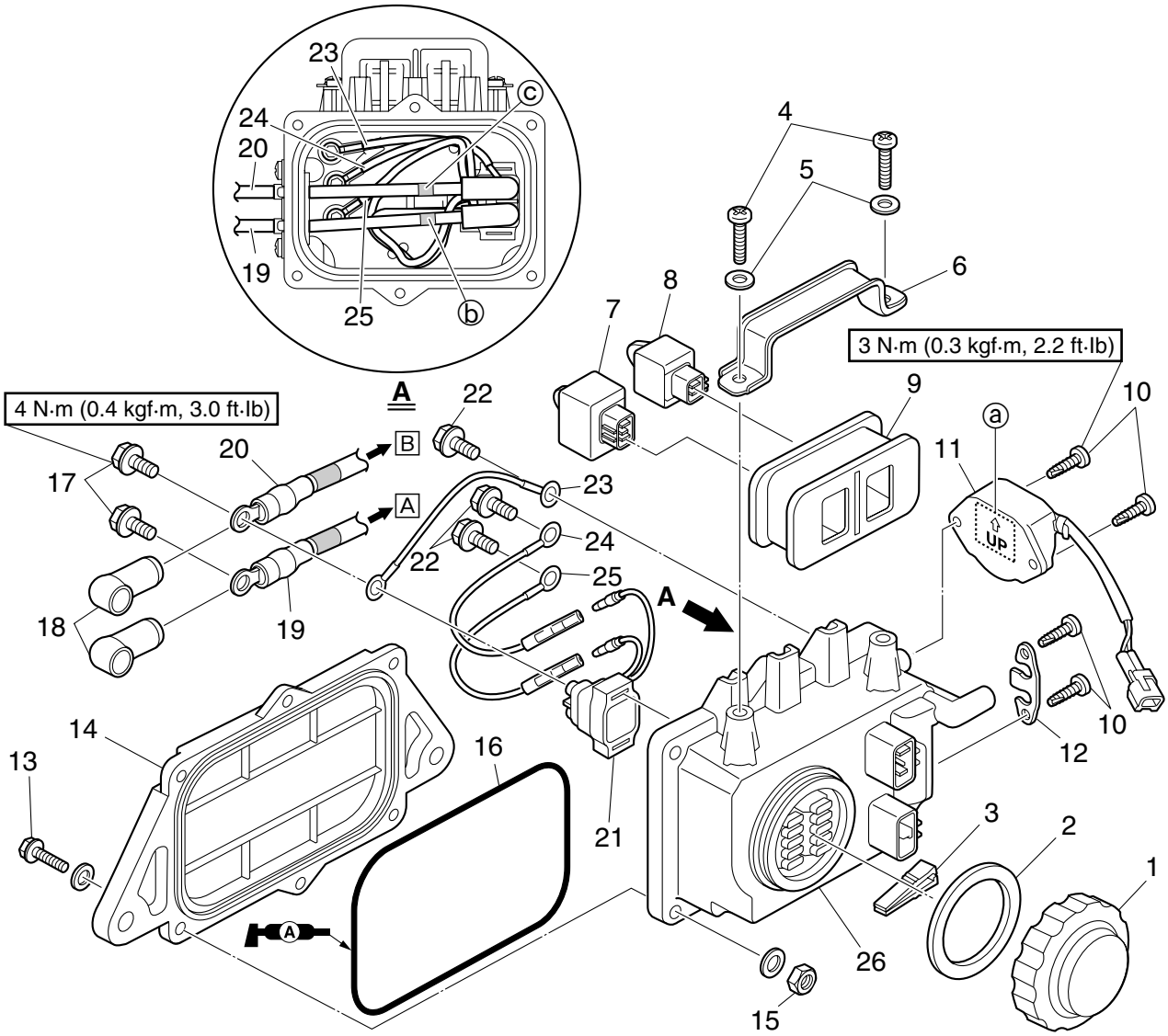

No.	Part name	Q'ty	Remarks
1	Fuse box cap	1	
2	Gasket	1	**Not reusable**
3	Fuse puller	1	
4	Screw	2	ø6 × 25 mm
5	Washer	2	
6	Bracket	1	
7	Main and fuel pump relay	1	
8	ETV relay	1	
9	Rubber mount	1	
10	Screw	4	ø6 × 20 mm
11	Slant detection switch	1	ⓐ "UP" mark
12	Plate	1	
13	Bolt	6	M6 × 20 mm
14	Fuse box cover	1	
15	Nut	6	
16	Gasket	1	**Not reusable**

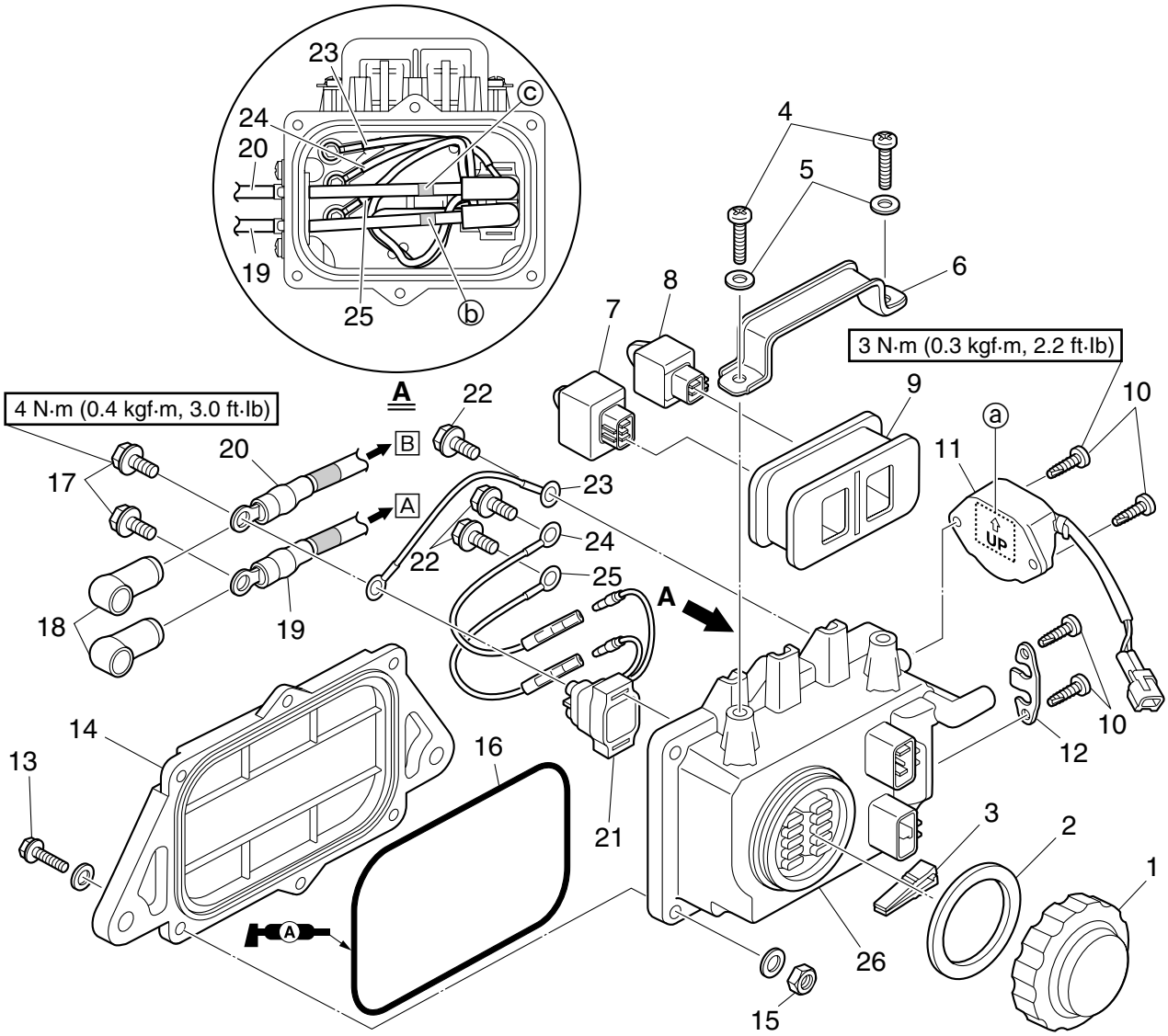

No.	Part name	Q'ty	Remarks
17	Bolt	2	M6 × 10 mm
18	Boot	2	
19	Starter motor cable	1	ⓑ White tape A To starter motor
20	Positive battery cable	1	ⓒ Black tape B To battery
21	Starter relay	1	
22	Bolt	3	M6 × 7 mm
23	Lead	1	Red lead
24	Lead	1	Brown lead
25	Lead	1	Black lead
26	Fuse box	1	

ECM and rectifier regulator

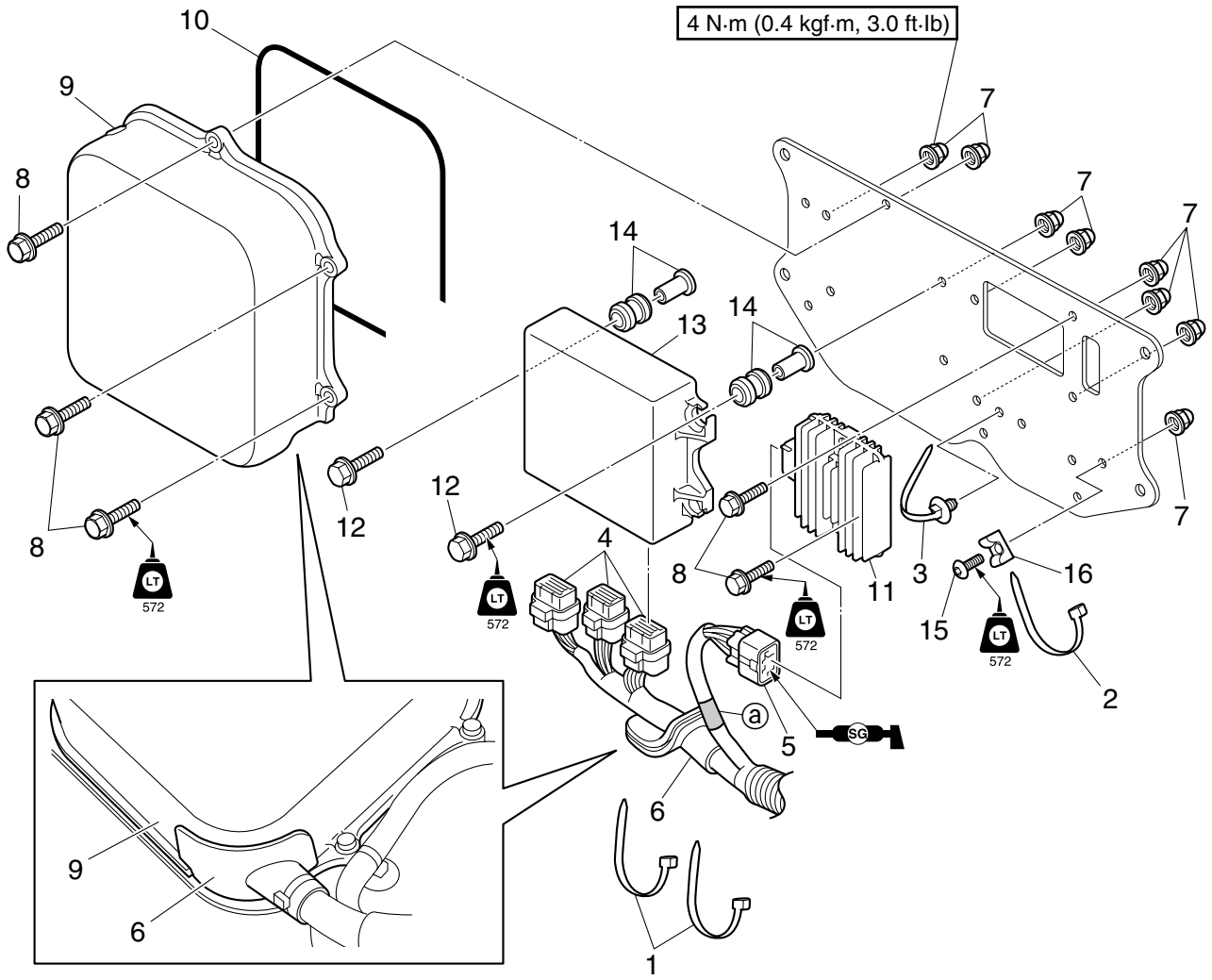

No.	Part name	Q'ty	Remarks
1	Plastic tie	2	
2	Plastic tie	1	
3	Plastic tie	1	
4	ECM coupler	3	
5	Rectifier regulator coupler	1	
6	Wiring harness	1	ⓐ Gray tape
7	Nut	12	
8	Bolt	7	M6 × 20 mm
9	ECM cover	1	
10	Gasket	1	**Not reusable**
11	Rectifier regulator	1	
12	Bolt	4	M6 × 25 mm
13	ECM	1	
14	Collar/grommet	4/4	
15	Bolt	1	M6 × 12 mm
16	Holder	1	

Electrical analysis

Check using the YDIS

When checking the TPS, APS, or other sensors, use the YDIS.
When deleting the diagnosis record in the YDIS, make sure to check the time that the diagnostic codes were detected.

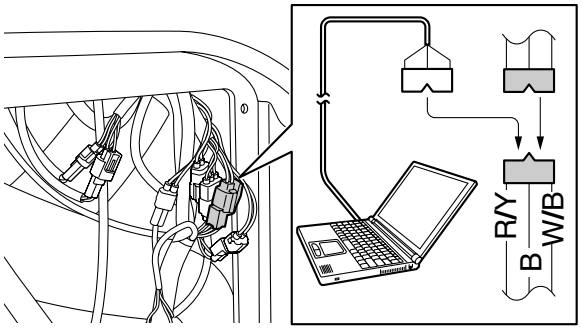

When checking the input voltage of a part, the coupler or connector must be disconnected. As a result, the ECM determines that the part is disconnected and a diagnostic code is detected. Therefore, make sure to delete the diagnosis record after checking the input voltage.
Power is supplied to the ECM for about 30 seconds after stopping the engine. Therefore, wait longer than 30 seconds before restarting the engine, otherwise the diagnostic codes will not be cleared from the ECM.

TIP:

- Before checking the electrical components, make sure that the battery is fully charged.
- If the tester leads are connected while using the YDIS, diagnostic codes will be detected.
- If a diagnosis record is displayed and it is caused by the checking steps, delete the record by using the “Diagnosis record” function of the YDIS.
- The YDIS requires that you use an exclusive communication cable and CD-ROM to connect to a computer. For a description of the communication cable and CD-ROM to be used, see “YDIS” (9-1). Also, make sure to check the CD-ROM version before using it.
- To connect the YDIS, see “YDIS” (9-1) or the YDIS (Ver. 1.30 or Ver. 1.32) Instruction Manual.

YDIS (KIT): 60V-85300-04
YDIS (CD-ROM, Ver. 1.30):
60V-WS853-04
YDIS (CD-ROM, Ver. 1.32):
60V-WS853-05

To supply power to the ECM (VX Cruiser and VX Deluxe)

Push the unlock button ⓐ on the remote control transmitter so that power is supplied to the ECM.

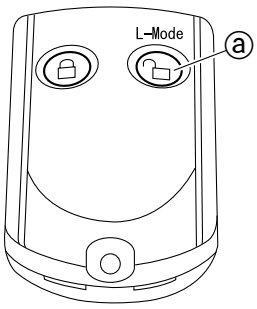

TIP:

To check that the remote control transmitter is working correctly, see “Remote control transmitter” (7-36).

To supply power to the ECM (VX Sport)

Connect the clip ① to the engine shut-off switch, and then push the engine start switch ② and engine stop switch ③ simultaneously.

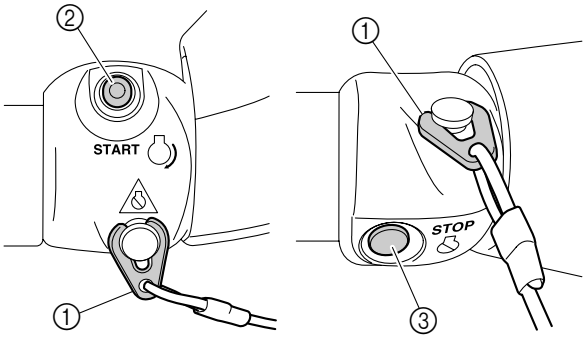

TIP:

It is not necessary to start the engine.

To measure the peak voltage

⚠ WARNING

When measuring the peak voltage, do not touch any of the connections of the digital tester probes.

NOTICE

- **When testing the voltage between the terminals of an electrical component with the digital tester, do not allow any of the leads to touch any metal parts.**
- **When starting the engine on land, make sure to connect a garden hose to the watercraft for proper water supply.**

To check the electrical components or measure the peak voltage, use the special service tools. A faulty electrical component can be easily checked by measuring the peak voltage. The specified engine speed when measuring the peak voltage is affected by many factors, such as fouled spark plugs or a weak battery. If one of these factors is present, the peak voltage cannot be measured properly.

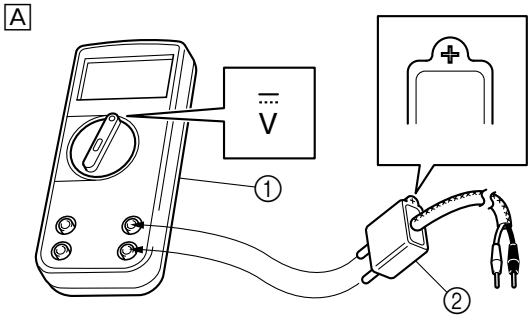

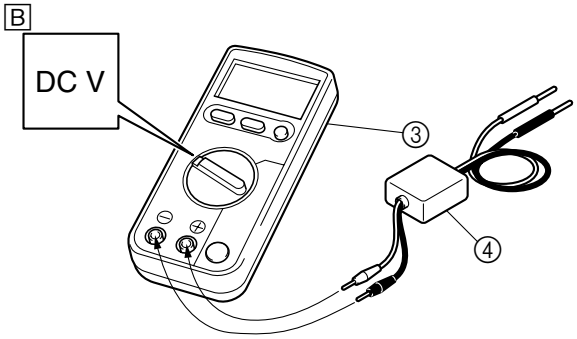

A U.S.A. and Canada
B Worldwide

Digital multimeter ①: YU-34899-A
Peak volt adapter ②: YU-39991
Digital circuit tester ③: 90890-03174
Peak voltage adapter B ④: 90890-03172

TIP:

- Before measuring the peak voltage, check all wiring for proper connection and corrosion, and check that the battery is fully charged.
- Use the peak voltage adapter with the recommended digital circuit tester.
- Connect the positive pin of the peak voltage adapter to the positive terminal of the digital circuit tester, and the negative pin to the negative terminal.
- When measuring the peak voltage, set the selector on the digital circuit tester to the **DC voltage mode**.

Ignition system

Ignition coil

Ignition spark

⚠ WARNING

When performing the spark gap check, keep flammable gas or liquids away, since this test can produce sparks.

1. Connect the YDIS.
2. Remove the ignition coil for the cylinder that will be tested.
3. Connect the ignition coil to the special service tool ①.
4. Using the "Stationary test" of the YDIS, check the ignition spark. **WARNING! Do not touch any of the connections of the special service tool leads.**
   Measure the ignition coil input voltage (from the battery) if there is no spark.

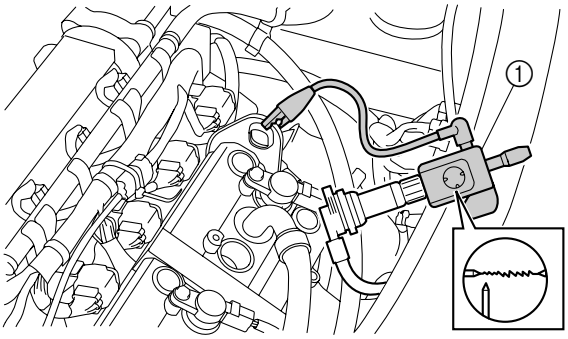

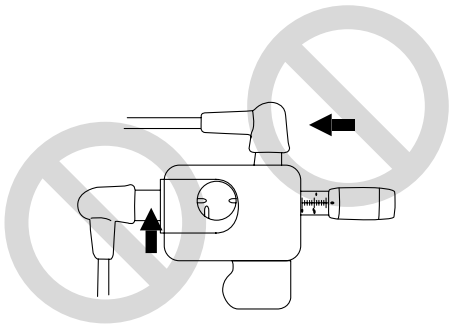

Spark checker ①: YM-34487
Ignition tester (Spark gap tester) ①:
90890-06754

5. Disconnect the special service tool, and then install the ignition coils.

Ignition coil input voltage (from the battery)

1. Disconnect the ignition coil couplers ⓐ, and then connect the test harness (2 pins) ①.
2. Supply power to the ECM, and then measure the input voltage at the ignition coil coupler terminals (wiring harness end). Check the wiring harness if out of specification. Check the ECM output peak voltage if within specification.

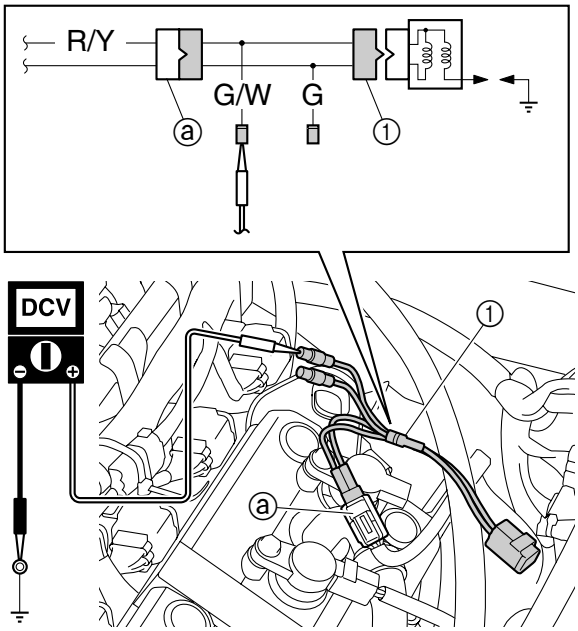

Test harness (2 pins) ①: YB-06867
Test harness FWY-2 (2 pins) ①:
90890-06867

Ignition coil input voltage (from the battery):
Red/Yellow (R/Y) – Ground
12 V (battery voltage)

3. Remove the test harness (2 pins) ①, and then connect the ignition coil couplers ⓐ.

ECM output peak voltage

⚠ WARNING

When checking the electrical components, do not touch any of the connections of the digital tester leads.

1. Disconnect the ignition coil couplers ⓐ, and then connect the test harness (2 pins) ① between the ignition coil and wiring harness.

2. Measure the ECM output peak voltage. Check the pickup coil resistance if below specification.

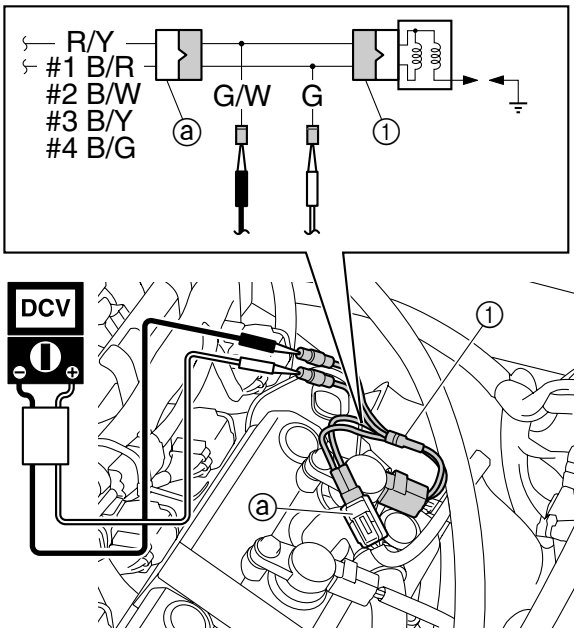

Test harness (2 pins) ①: YB-06867 Test harness FWY-2 (2 pins) ①: 90890-06867

ECM output peak voltage:
#1 Black/Red (B/R) – Red/Yellow (R/Y)
#2 Black/White (B/W) – Red/Yellow (R/Y)
#3 Black/Yellow (B/Y) – Red/Yellow (R/Y)
#4 Black/Green (B/G) – Red/Yellow (R/Y)

r/min	Loaded		
	Cranking	2000	3500
V	94.0	120.0	148.0

TIP:
- If measuring the ECM output peak voltage under the "Cranking" condition, disconnect the fuel injector couplers for all cylinders.
- To crank the engine, connect the engine shut-off cord to the engine shut-off switch, and then push the engine start switch.

3. Remove the test harness (2 pins) ①, and then connect the ignition coil couplers ⓐ.

Ignition coil resistance

1. Remove the ignition coils.

2. Measure the ignition coil resistance. Replace the ignition coil if out of specification. Measure the pickup coil output peak voltage if within specification.

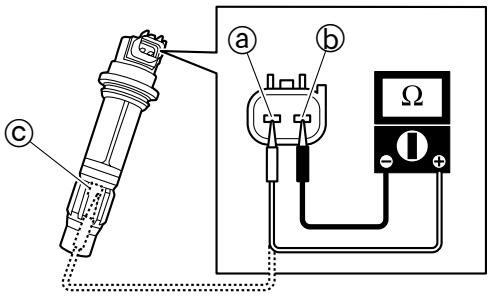

Primary coil resistance at 20 °C (68 °F) (reference data): Terminal ⓐ – Terminal ⓑ 1.19–1.61 Ω Secondary coil resistance at 20 °C (68 °F) (reference data): Terminal ⓒ – Terminal ⓑ 8.5–11.5 kΩ

3. Install the ignition coils, and then connect the ignition coil couplers.

Pickup coil

Pickup coil output peak voltage

1. Disconnect the pickup coil coupler ⓐ, and then connect the test harness (3 pins) ①.

2. Measure the pickup coil output peak voltage. Measure the pickup coil resistance if below specification.

7

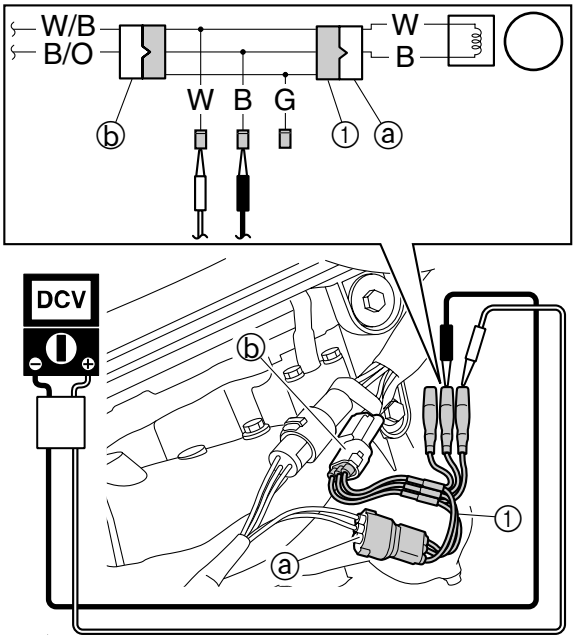

Test harness (3 pins) ①: YB-06877
Test harness HM090-3 (3 pins) ①:
90890-06877

Pickup coil output peak voltage: White (W) – Black (B)				
r/min	Unloaded	Loaded		
	Cranking		2000	3500
V	6.0	5.0	17.0	23.0

TIP:

- To crank the engine, connect the engine shut-off cord to the engine shut-off switch, and then push the engine start switch and engine stop switch simultaneously.
- If measuring the pickup coil output peak voltage under the "Cranking" and "Unloaded" conditions, disconnect the pickup coil coupler (wiring harness end) ⓑ.

3. Remove the test harness (3 pins) ①, and then connect the pickup coil coupler ⓐ.

Pickup coil resistance

1. Disconnect the pickup coil coupler ⓐ, and then connect the test harness (3 pins) ①.

2. Measure the pickup coil resistance. Replace the stator coil assy. if out of specification.

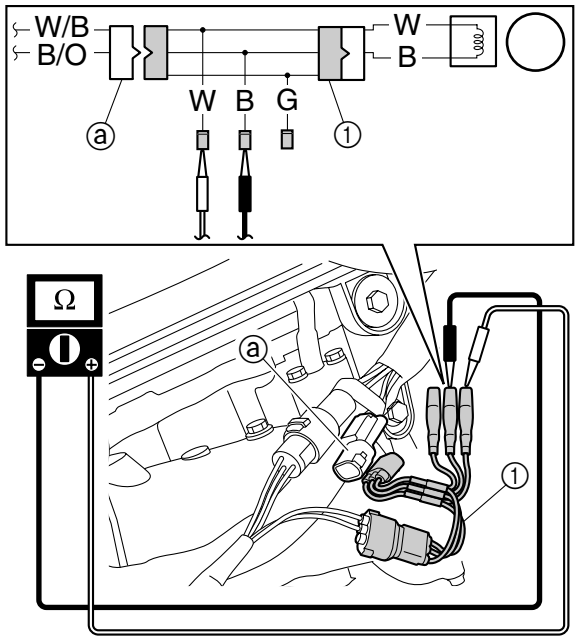

Test harness (3 pins) ①: YB-06877
Test harness HM090-3 (3 pins) ①:
90890-06877

Pickup coil resistance at 20 °C (68 °F) (reference data):
White (W) – Black (B)
459–561 Ω

3. Remove the test harness (3 pins) ①, and then connect the pickup coil coupler ⓐ.

Charging system

Stator coil

Stator coil output peak voltage

1. Disconnect the stator coil coupler ⓐ, and then connect the test harness (3 pins) ①.

2. Measure the stator coil output peak voltage. Measure the stator coil resistance if below specification.

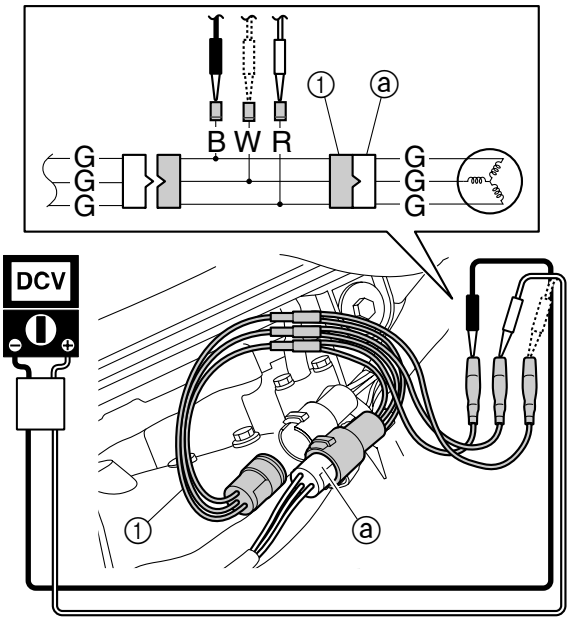

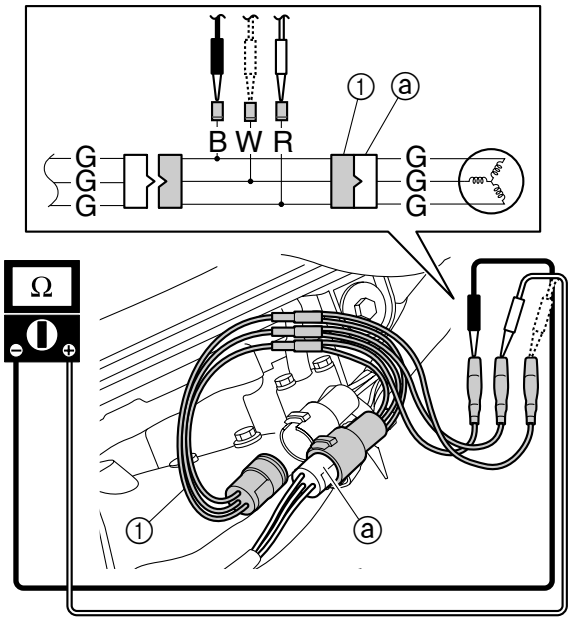

Test harness (3 pins) ①: YB-06870 Test harness SMT250-3 (3 pins) ①: 90890-06870

Stator coil output peak voltage: Green (G) – Green (G)			
r/min	Unloaded		
	Cranking	2000	3500
V	6.0	26.0	45.0

3. Remove the test harness (3 pins) ①, and then connect the stator coil coupler ⓐ.

Stator coil resistance

1. Disconnect the stator coil coupler ⓐ, and then connect the test harness (3 pins) ①.

2. Measure the stator coil resistance. Replace the stator coil assy. if out of specification. Measure the rectifier regulator output peak voltage if within specification.

Test harness (3 pins) ①: YB-06870 Test harness SMT250-3 (3 pins) ①: 90890-06870

Stator coil resistance at 20 °C (68 °F) (reference data): Green (G) – Green (G) 0.23–0.29 Ω

3. Remove the test harness (3 pins) ①, and then connect the stator coil coupler ⓐ.

Rectifier regulator

Rectifier regulator output peak voltage

1. Disconnect the rectifier regulator coupler ⓐ, and then connect the test harness (6 pins) ①.

2. Measure the rectifier regulator output peak voltage. Check the rectifier regulator continuity if below specification.

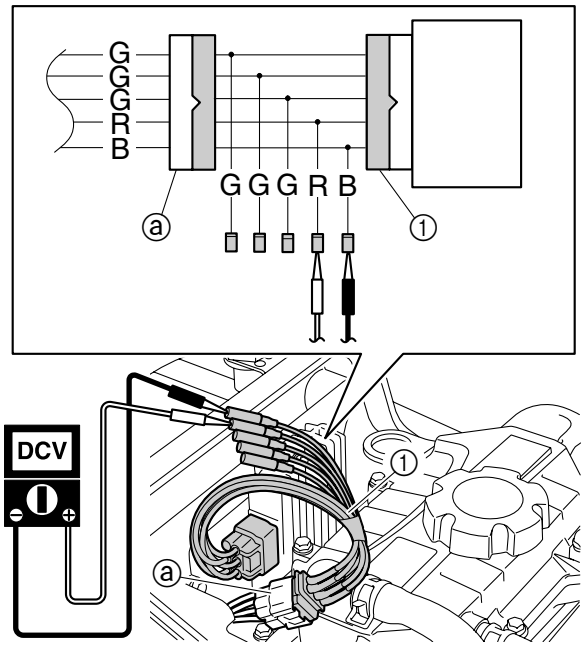

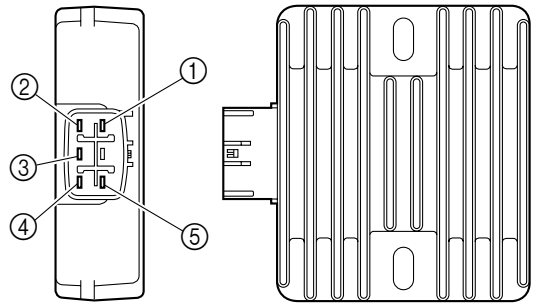

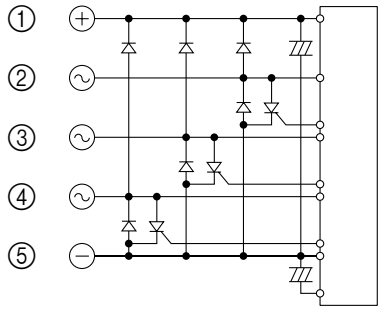

Test harness (6 pins) ①: YB-06790 Test harness FSW-6 (6 pins) ①: 90890-06790

Rectifier regulator output peak voltage: Red (R) – Black (B)		
r/min	Loaded	
	2000	3500
V	13	

TIP:
Do not use the peak voltage adapter to measure the output voltage.

3. Disconnect the test coupler (6 pins) ①, and then connect the rectifier regulator coupler ⓐ.

Rectifier regulator continuity

1. Remove the rectifier regulator. See “ECM and rectifier regulator” (7-6).

2. Check the rectifier regulator for continuity. Replace if out of specification.

A

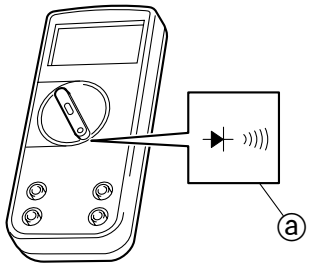

B

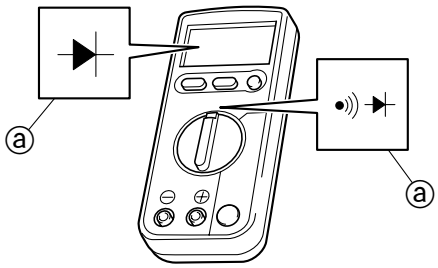

A U.S.A. and Canada
B Worldwide

Rectifier regulator continuity (testing diode mode):		
Tester lead		Display value (V) (reference data)
⊕	⊖	
①	②	OL
	③	
	④	
	⑤	
②	①	0.41–0.49
	③	OL
	④	
	⑤	
③	①	0.41–0.49
	②	OL
	④	
	⑤	
④	①	0.41–0.49
	②	OL
	③	
	⑤	
⑤	①	0.77–0.85
	②	0.41–0.49
	③	0.41–0.49
	④	0.41–0.49

OL: overload

TIP:
Make sure to set the measurement range ⓐ when checking the rectifier regulator continuity.

3. Install the rectifier regulator. See “ECM and rectifier regulator” (7-6), and then connect the rectifier regulator coupler.

Control system

Oil pressure switch

Oil pressure switch input voltage

1. Disconnect the oil pressure switch coupler ⓐ, and then supply power to the ECM, and then measure the input voltage between the oil pressure switch coupler terminal (wiring harness end) and ground. Check the wiring harness if out of specification.

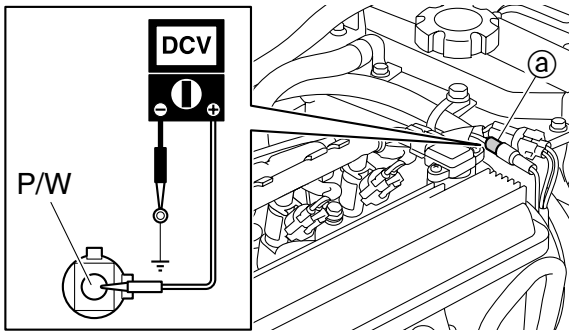

Oil pressure switch input voltage (reference data):
Pink/White (P/W) – Ground
11.0–12.0 V

2. Connect the oil pressure switch coupler ⓐ.

Oil pressure switch continuity

1. Remove the oil pressure switch. See “Timing chain and electrical part” (5-92).

2. Connect the tester leads to the terminal thread ⓐ and body ⓑ of the oil pressure switch.

3. Connect a vacuum/pressure pump gauge to the oil pressure switch, and then apply positive pressure.

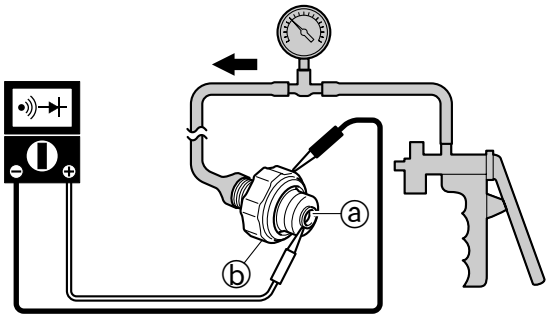

4. Check the oil pressure switch for continuity. Replace if out of specification.

Oil pressure switch continuity:	
Pressure	Terminal thread ⓐ – Body ⓑ
Below 128–166 kPa (1.28–1.66 kgf/cm^2, 18.2–23.6 psi)	Continuity
Above 128–166 kPa (1.28–1.66 kgf/cm^2, 18.2–23.6 psi)	No continuity

TIP:
Use a commercially available vacuum/pressure pump gauge and meter.

5. Install the oil pressure switch. See “Timing chain and electrical part” (5-92), and then connect the oil pressure switch coupler.

Thermoswitch (engine)

Thermoswitch (engine) input voltage

1. Disconnect the thermoswitch (engine) coupler ⓐ, and then supply power to the ECM, and then measure the input voltage at the thermoswitch (engine) coupler terminals (wiring harness end). Check the wiring harness if out of specification.

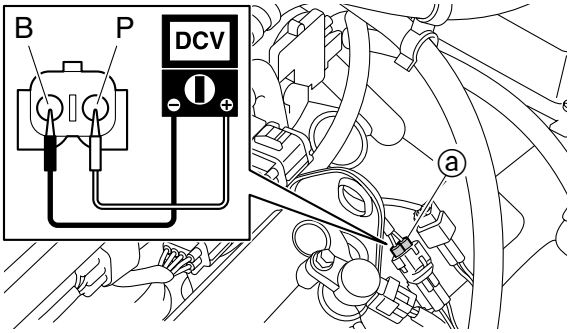

Thermoswitch (engine) input voltage (reference data):
Pink (P) – Black (B)
11.0–12.0 V

2. Connect the thermoswitch (engine) coupler ⓐ.

Thermoswitch (engine) continuity temperature

1. Remove the thermoswitch (engine). See “Timing chain and electrical part” (5-92).

2. Suspend the thermoswitch (engine) in a container filled with water, and then slowly heat the water.

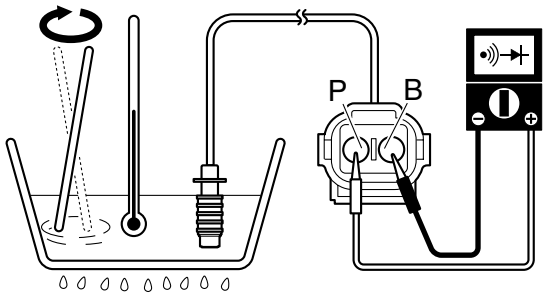

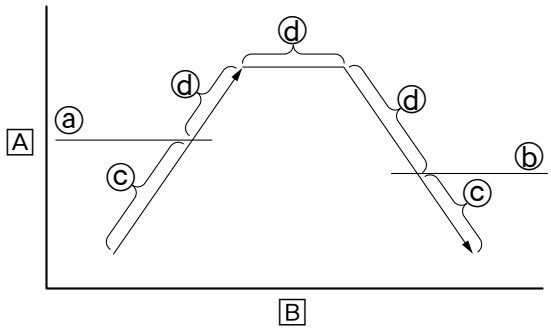

3. Check the thermoswitch (engine) for continuity when the specified temperatures are reached. Replace if out of specification.

Thermoswitch (engine) continuity temperature:
Pink (P) – Black (B)
ⓐ: 84–90 °C (183–194 °F)
ⓑ: 70–84 °C (158–183 °F)

ⓒ No continuity
ⓓ Continuity
A Temperature
B Time

4. Install the thermoswitch (engine). See “Timing chain and electrical part” (5-92).

Thermoswitch (exhaust)

Thermoswitch (exhaust) input voltage

1. Disconnect the thermoswitch (exhaust) coupler ⓐ, and then supply power to the ECM, and then measure the input voltage at the thermoswitch (exhaust) coupler terminals (wiring harness end). Check the wiring harness if out of specification.

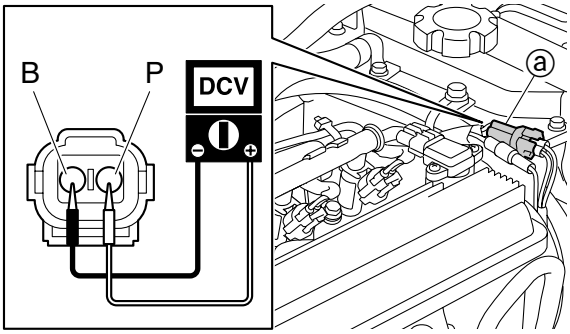

Thermoswitch (exhaust) input voltage (reference data): Pink (P) – Black (B) 11.0–12.0 V

2. Connect the thermoswitch (exhaust) coupler ⓐ.

Thermoswitch (exhaust) continuity temperature

1. Remove the thermoswitch (exhaust). See “Muffler” (5-24).

2. Suspend the thermoswitch (exhaust) in a container filled with water, and then slowly heat the water.

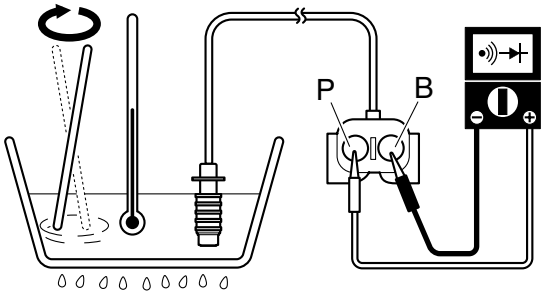

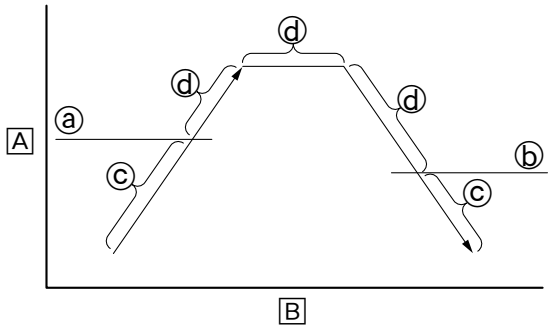

3. Check the thermoswitch (exhaust) for continuity when the specified temperatures are reached. Replace if out of specification.

Thermoswitch (exhaust) continuity temperature: Pink (P) – Black (B) ⓐ: 80–86 °C (176–187 °F) ⓑ: 66–80 °C (151–176 °F)

ⓒ No continuity
ⓓ Continuity
A Temperature
B Time

4. Install the thermoswitch (exhaust). See “Muffler” (5-24).

Engine temperature sensor

Engine temperature sensor input voltage

1. Disconnect the engine temperature sensor coupler ⓐ, and then supply power to the ECM, and then measure the input voltage at the engine temperature sensor coupler terminals (wiring harness end). Check the wiring harness if out of specification.

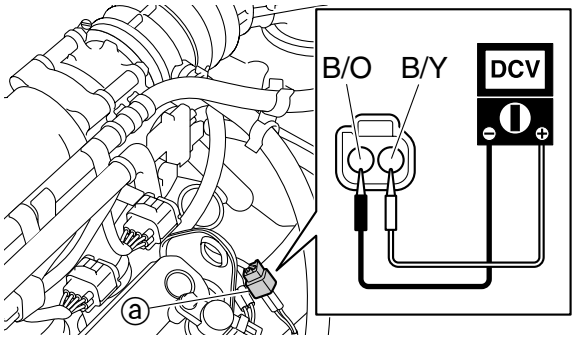

Engine temperature sensor input voltage (reference data): Black/Yellow (B/Y) – Black/Orange (B/O) 4.75–5.25 V

2. Connect the engine temperature sensor coupler ⓐ.

Engine temperature sensor resistance

1. Remove the engine temperature sensor. See “Timing chain and electrical part” (5-92).

2. Suspend the engine temperature sensor in a container filled with water, and then slowly heat the water.

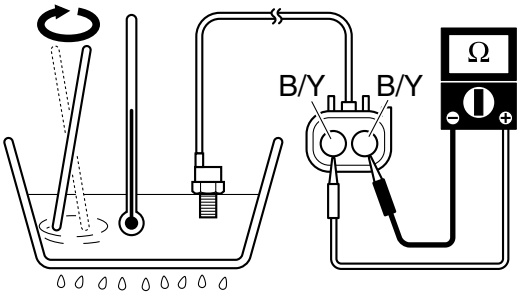

3. Measure the engine temperature sensor resistance when the specified temperatures are reached. Replace if out specification.

Engine temperature sensor resistance (reference data): Black/Yellow (B/Y) – Black/Yellow (B/Y) 20 °C (68 °F): 54.2–69.0 kΩ 100 °C (212 °F): 3.12–3.48 kΩ

4. Install the engine temperature sensor. See “Timing chain and electrical part” (5-92).

Sensor assy. (intake air pressure and intake air temperature)

Sensor assy. input voltage

1. Disconnect the sensor assy. coupler ⓐ, and then supply power to the ECM, and then measure the input voltage at the sensor assy. coupler (wiring harness end). Check the wiring harness if out of specification.

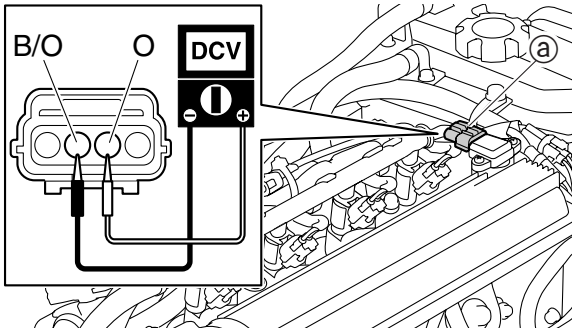

Sensor assy. (intake air pressure) input voltage (reference data): Orange (O) – Black/Orange (B/O) 4.75–5.25 V

2. Connect the sensor assy. coupler ⓐ.

Sensor assy. (intake air pressure) operation

1. Connect the YDIS to display “Intake pressure.”

2. Start the engine, and then increase the engine speed slowly and check that the displayed intake air pressure increases. Replace if it does not increase.

Sensor assy. (intake air temperature) operation

1. Measure the ambient temperature.

2. Connect the YDIS to display “Intake temperature.”

3. If the ambient temperature and the displayed intake air temperature differ by more than ± 5 °C (± 9 °F), measure the sensor assy. (intake air temperature) resistance.

TIP:
Check the intake air temperature sensor when the engine is cold.

Sensor assy. (intake air temperature) resistance

1. Remove the sensor assy. See “Intake assy.” (5-20).

2. Suspend the sensor assy. in a container filled with water, and then slowly heat the water.

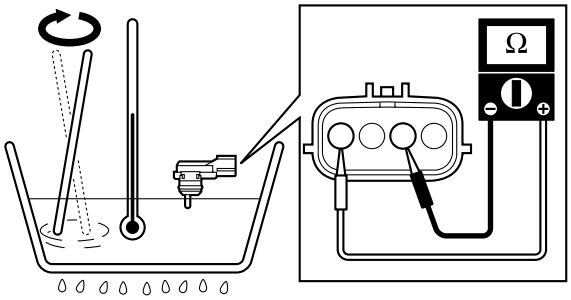

3. Measure the sensor assy. resistance when the specified temperatures are reached. Replace if out of specification.

Sensor assy. (intake air temperature) resistance (reference data): 0 °C (32 °F): 5.4–6.6 kΩ 80 °C (176 °F): 0.29–0.39 kΩ

4. Install the sensor assy. See “Intake assy.” (5-20).

Throttle position sensor

NOTICE

- **Do not loosen the throttle stop screw nut ⓐ and do not turn the throttle stop screw ⓑ.**
- **TPS 1 and TPS 2 are components of the electronic throttle valve, which cannot be disassembled.**

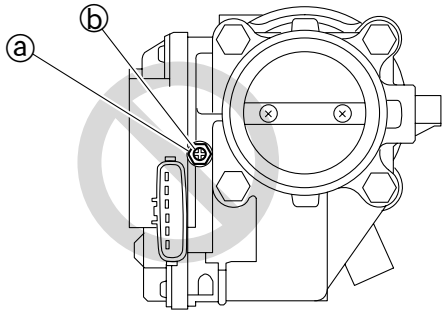

TPS output voltage and throttle valve opening angle

1. Connect the YDIS to display “Throttle position sensor 1”, “Throttle valve opening”, and “Throttle position sensor 2.”

TIP:
When checking the TPS using the YDIS, do not start the engine.

2. Squeeze the throttle lever slowly and check that the displayed throttle valve opening increases.

3. Check that the APS pulley stopper ⓐ contacts the fully closed stopper ⓑ when the throttle lever ① is at the fully closed position [A].

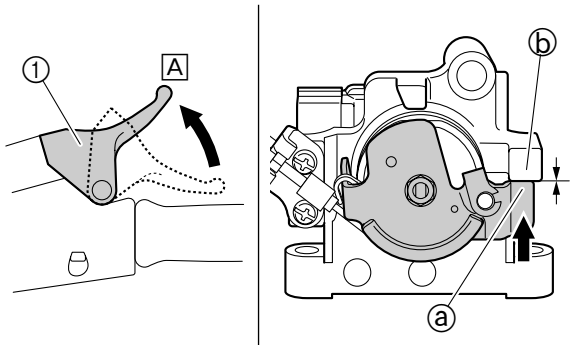

TIP:
To adjust the throttle cable, see “Throttle lever free play adjustment” (3-2).

4. Check the TPS 1 output voltage and throttle valve opening angle at the fully closed position [A].

TPS 1 output voltage with throttle lever fully closed: 0.6–0.9 V Throttle valve opening angle with throttle lever fully closed: 2.0–8.0°

5. Operate the throttle lever ①, and then check the TPS 2 output voltage and throttle valve opening angle at the fully open position [B].

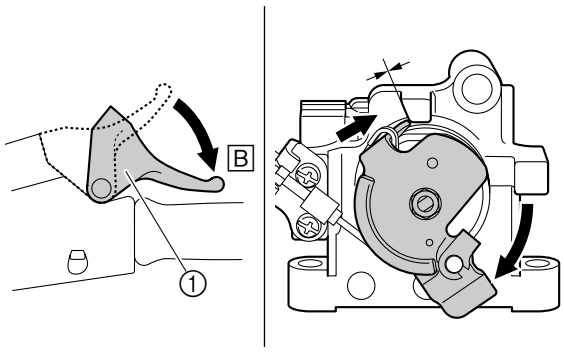

TPS 2 output voltage with throttle lever fully open: 4.6–4.7 V Throttle valve opening angle with throttle lever fully open: more than 70°

TIP:
The actual TPS output voltage and throttle valve opening angle may vary according to environmental conditions and engine temperature.

6. Operate the throttle lever ① so that the TPS 2 output voltage is at 4.5 V or less, and then check the voltage difference between TPS 1 and TPS 2. Measure the TPS input voltage if out of specification.

TPS output voltage difference: 1.9–2.1 V

Example:
If the TPS 1 output voltage is 2.5 V and the TPS 2 output voltage is 4.5 V, then 4.5–2.5 = 2.0 V.

TPS input voltage

1. Disconnect the throttle body assy. coupler ⓐ, and then supply power to the ECM, and then measure the input voltage at the throttle body assy. coupler terminals (wiring harness end). Check the TPS circuit continuity if out of specification.

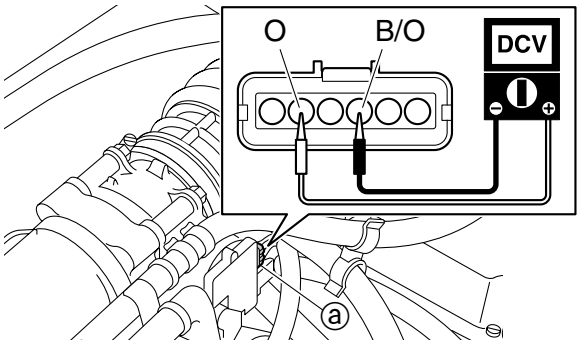

TPS input voltage (reference data): Orange (O) – Black/Orange (B/O) 4.75–5.25 V

2. Connect the throttle body assy. coupler ⓐ.

TPS circuit continuity

1. Remove the ECM cover ①, and then disconnect the throttle body assy. coupler ⓐ and ECM couplers ⓑ and ⓒ.

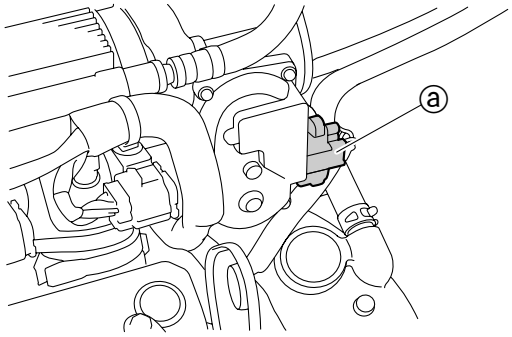

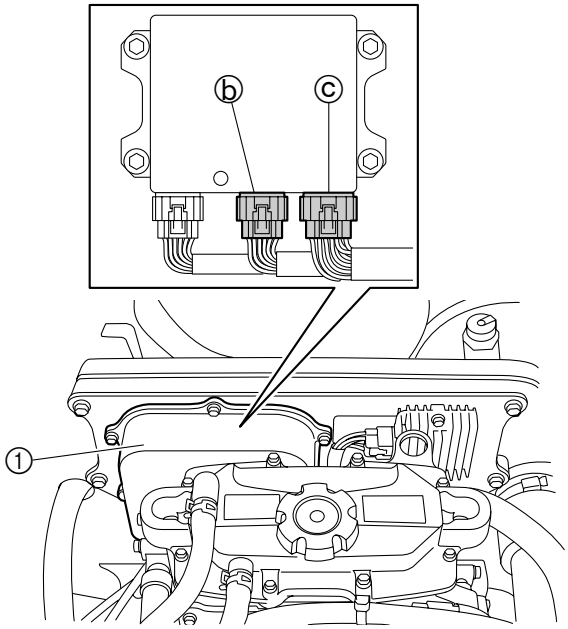

2. Check the wiring harness for continuity. Replace if there is no continuity. Replace the throttle body assy. if there is continuity.

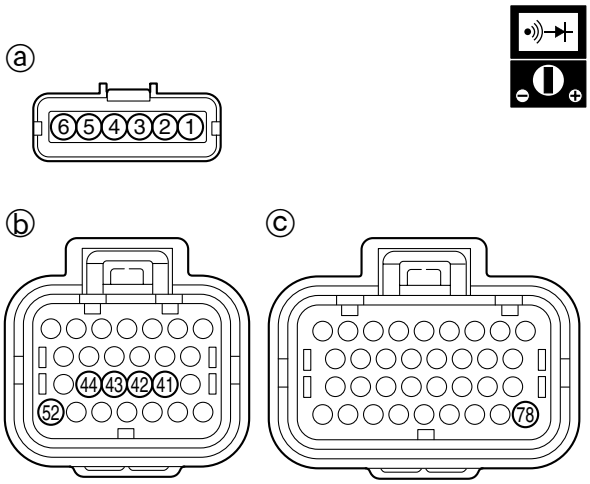

TPS circuit continuity:		
Terminal No.		Color
Coupler ⓐ	Coupler ⓑ, ⓒ	
①	㉘	G
②	㊷	L
③	㊶	B/O
④	㊷	P
⑤	㊹	O
⑥	㊸	P/B

3. Connect the throttle body assy. coupler ⓐ and ECM couplers ⓑ and ⓒ, and then install the ECM cover ①.

Accelerator position sensor

NOTICE

APS 1 and APS 2 are a single unit, which cannot be disassembled.

APS output voltage

1. Connect the YDIS to display "Accelerator position sensor 1" and "Accelerator position sensor 2."

TIP:
When checking the APS using the YDIS, do not start the engine.

2. Check that the APS pulley stopper ⓐ contacts the fully closed stopper ⓑ when the throttle lever ① is at the fully closed position [A].

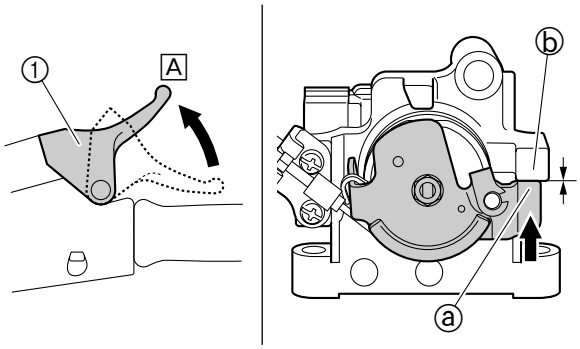

TIP:
To adjust the throttle cable, see "Throttle lever free play adjustment" (3-2).

3. Operate the throttle lever ①, and then check the output voltages of APS 1 and APS 2 at the fully closed position [A] and fully open position [B].

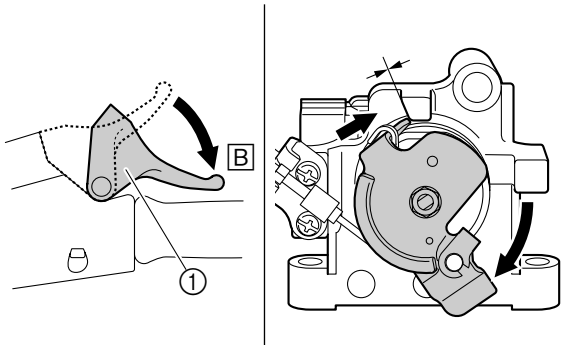

APS output voltage:		
Item	Throttle lever position	
	Fully closed [A]	Fully open [B]
APS 1	0.50–0.90 V	3.75–4.35 V
APS 2	0.35–1.05 V	3.60–4.50 V

TIP:
The actual APS output voltage may vary according to environmental conditions.

4. Squeeze the throttle lever ① to the fully open position [B], and then check the voltage difference between APS 1 and APS 2. Measure the APS input voltage if out of specification.

APS output voltage difference (with throttle lever fully open): 0.75 V or less

APS input voltage

1. Disconnect the APS coupler ⓐ, and then supply power to the ECM, and then measure the input voltage at the APS coupler terminals (wiring harness end). Measure the APS resistance if within specification. Check the APS circuit continuity if out of specification.

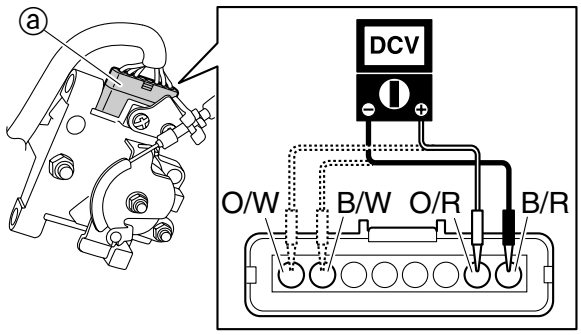

APS 1 input voltage (reference data):
Orange/Red (O/R) – Black/Red (B/R)
4.75–5.25 V
APS 2 input voltage (reference data):
Orange/White (O/W) – Black/White (B/W)
4.75–5.25 V

2. Connect the APS coupler ⓐ.

APS resistance

1. Disconnect the APS coupler ⓐ.
2. Loosen the locknut ①, and then remove the throttle cable ②.
3. Remove the nuts ③, and then remove the APS ④.

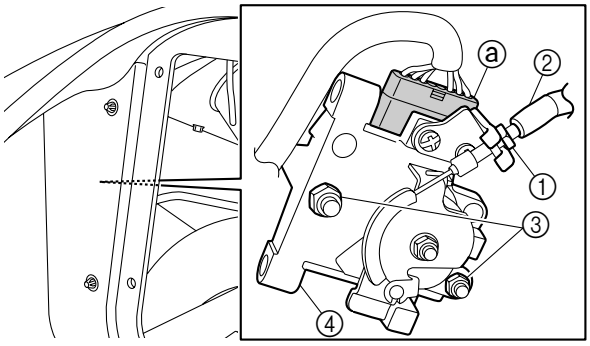

4. Check that the APS pulley stopper ⓑ contacts the fully closed stopper ⓒ when the APS pulley is at the fully closed position [A].
5. Measure the APS resistance at the fully closed position [A]. Replace the APS if out of specification.

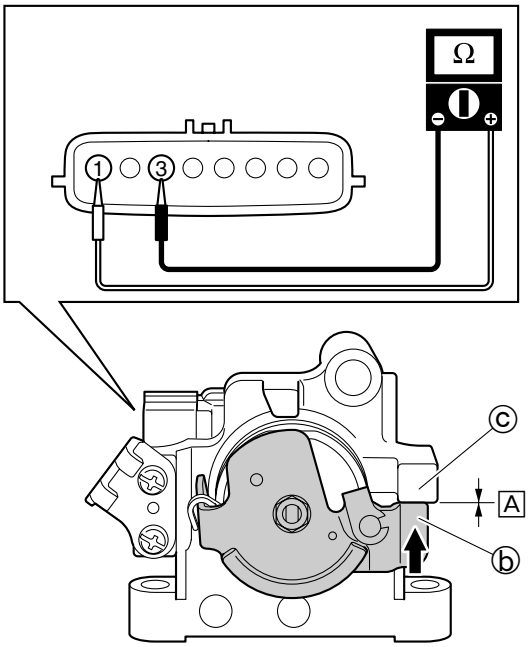

6. Check that the APS pulley stopper ⓓ contacts the fully open stopper ⓔ when the APS pulley is at the fully open position [B].
7. Measure the APS resistance at the fully open position [B]. Replace the APS if out of specification.

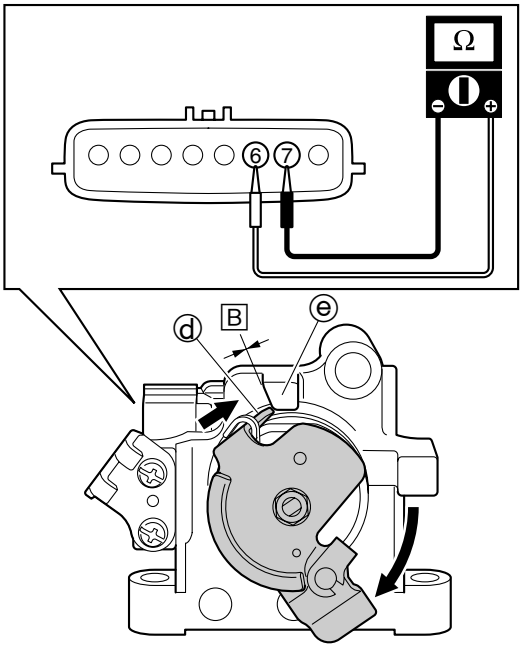

APS resistance at 20 °C (68 °F) (reference data):			
Item	Terminal	APS pulley position	
		Fully closed A	Fully open B
APS 1	①–③	0.50–0.90 kΩ	3.75–4.35 kΩ
APS 2	⑥–⑦	0.35–1.05 kΩ	3.60–4.50 kΩ

8. Install the APS ④, and then tighten the nuts ③ to the specified torque.

9. Install the throttle cable ②, and then tighten the locknut ① to the specified torque.

10. Connect the APS coupler ⓐ.

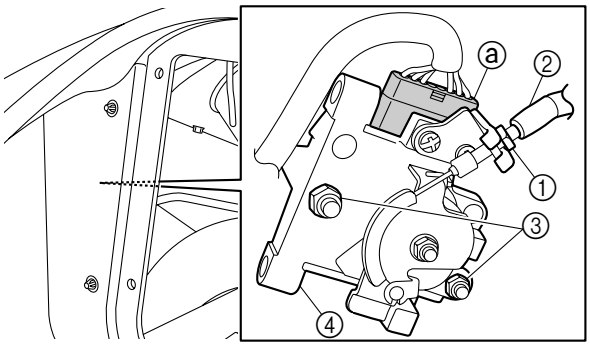

APS nut ③: 17 N·m (1.7 kgf·m, 12.5 ft·lb) Locknut ①: 7 N·m (0.7 kgf·m, 5.2 ft·lb)

TIP:
After installing the throttle cable, make sure that the throttle lever free play is within specification.

APS circuit continuity

1. Remove the ECM cover ①, and then disconnect the APS coupler ⓐ and ECM coupler ⓑ.

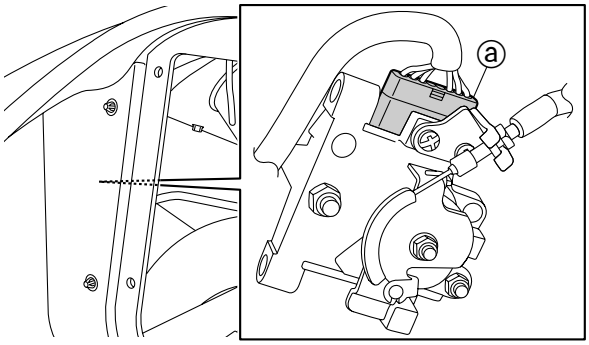

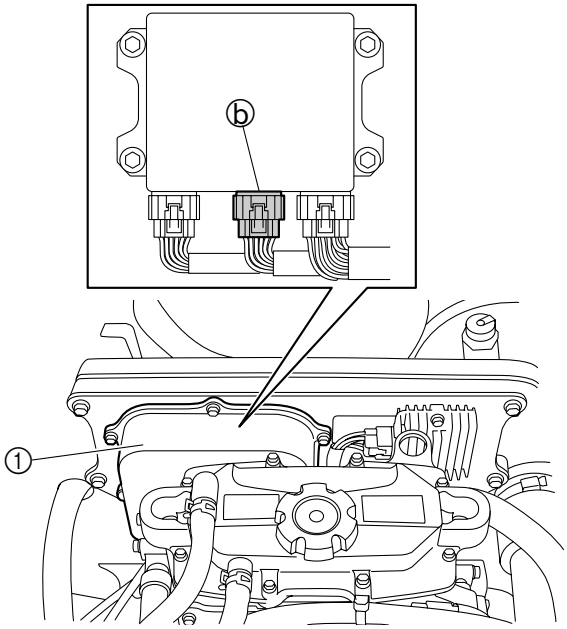

2. Check the wiring harness for continuity. Replace if there is no continuity.

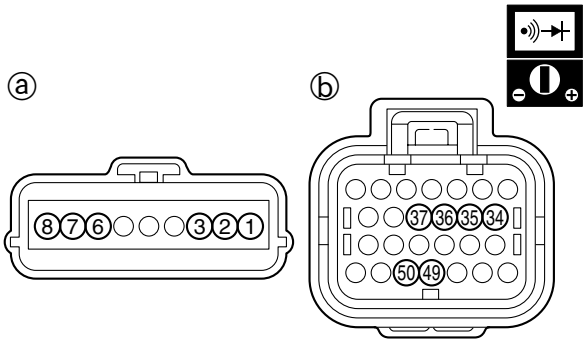

APS circuit continuity:		
Terminal No.		Color
Coupler ⓐ	Coupler ⓑ	
①	㉞	B/R
②	㊾	O/R
③	㊱	P/R
⑥	㊲	P/W
⑦	㉟	B/W
⑧	㊿	O/W

3. Connect the APS coupler ⓐ and ECM coupler ⓑ, and then install the ECM cover ①.

Electronic throttle valve relay

ETV relay input voltage

1. Disconnect the ETV relay coupler ⓐ, and then supply power to the ECM, and then measure the input voltage between the ETV relay coupler terminals and ground. Check the wiring harness if out of specification.

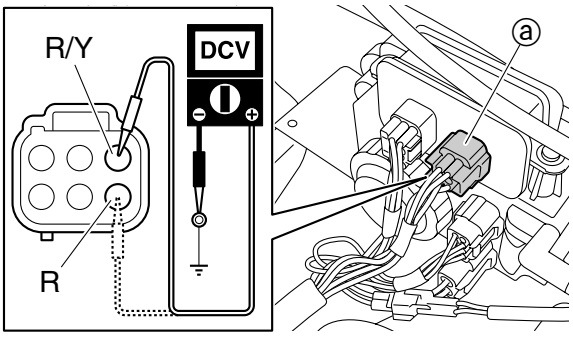

ETV relay input voltage:
Red/Yellow (R/Y) – Ground
Red (R) – Ground
12 V (battery voltage)

2. Connect the ETV relay coupler ⓐ.

ETV relay continuity

1. Remove the ETV relay. See “Fuse box” (7-4).

2. Connect the tester leads to the ETV relay terminals ④ and ⑤ or to the terminals ④ and ⑥.

3. Connect the positive battery lead to the ETV relay terminal ① or ②.

4. Connect the negative battery lead to the ETV relay terminal ③.

5. Check the continuity between terminals ④ and ⑤ or terminals ④ and ⑥. Replace the ETV relay if out of specification.

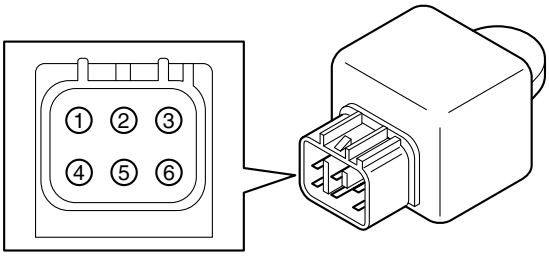

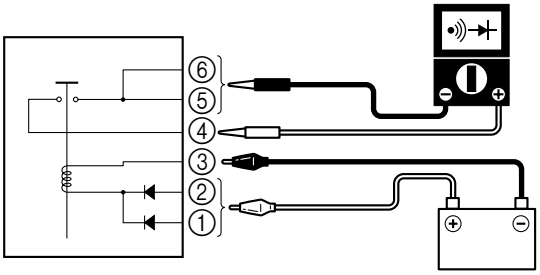

ETV relay continuity:	
Battery lead ① or ② – ③	Terminal ④ – ⑤ or ⑥
Disconnected	No continuity
Connected	Continuity

6. Install the ETV relay. See “Fuse box” (7-4).

Cam position sensor

Cam position sensor input voltage

1. Disconnect the cam position sensor coupler ⓐ, and then supply power to the ECM, and then measure the input voltage at the cam position sensor coupler terminals (wiring harness end). Check the wiring harness if out of specification. Measure the cam position sensor output voltage if within specification.

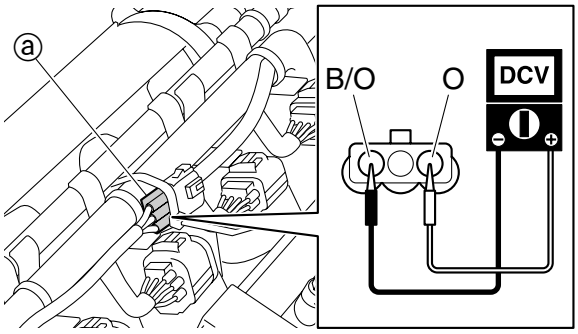

Cam position sensor input voltage (reference data): Orange (O) – Black/Orange (B/O) 4.75–5.25 V

2. Connect the cam position sensor coupler ⓐ.

Cam position sensor output voltage

1. Remove the cam position sensor. See "Cylinder head cover" (5-58), and then connect the test harness (3 pins) ① to the cam position sensor and the wiring harness.

2. Supply power to the ECM, and then measure the output voltage when a screwdriver is passed under the cam position sensor in direction [A]. Replace the cam position sensor if out of specification.

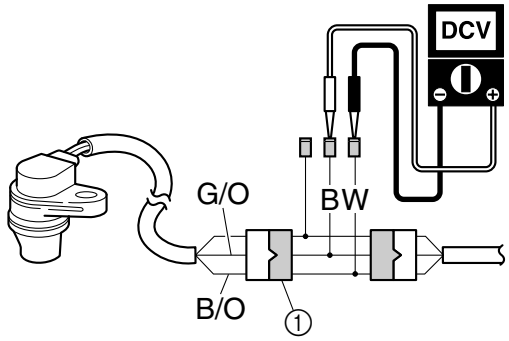

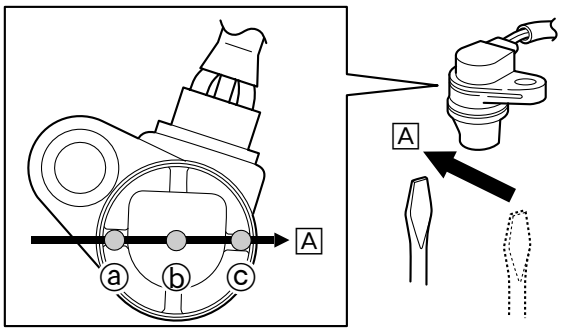

Test harness (3 pins) ①: YB-06877 Test harness HM090-3 (3 pins) ①: 90890-06877

Cam position sensor output voltage: Green/Orange (G/O) – Black/Orange (B/O)	
Position	Voltage (V)
ⓐ, ⓒ	More than 4.8
ⓑ	Less than 0.8

3. Disconnect the test harness (3 pins) ①, and then install the cam position sensor. See "Cylinder head cover" (5-58).

Slant detection switch

Slant detection switch input voltage

1. Disconnect the slant detection switch coupler ⓐ, and then supply power to the ECM, and then measure the input voltage at the slant detection switch coupler (wiring harness end). Check the wiring harness if out of specification.

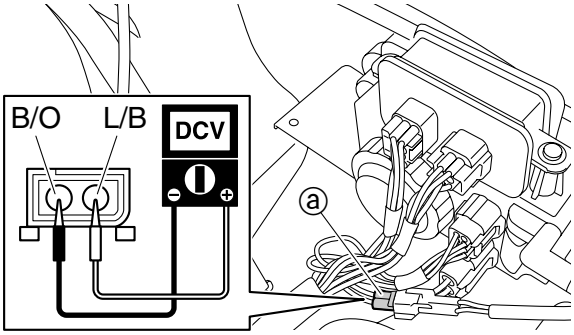

Slant detection switch input voltage (reference data): Blue/Black (L/B) – Black/Orange (B/O) 4.75–5.25 V

2. Connect the slant detection switch coupler ⓐ.

Slant detection switch continuity

1. Remove the slant detection switch. See "Fuse box" (7-4).

2. Check the slant detection switch for continuity. Replace if out of specification.

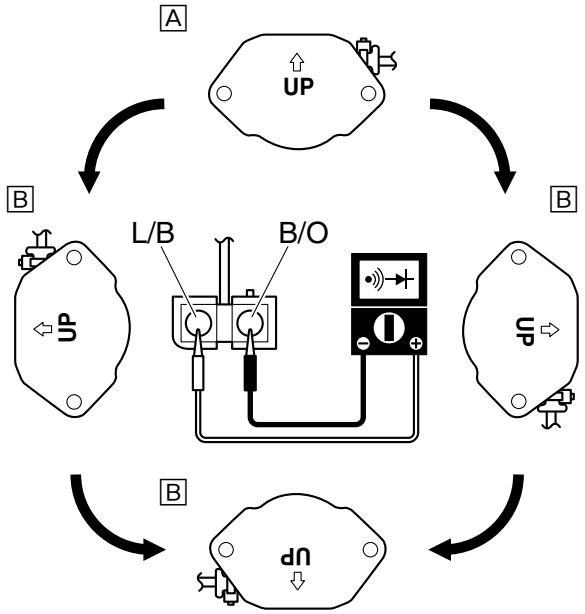

Slant detection switch continuity:	
Position	Blue/Black (L/B) – Black/Orange (B/O)
Normal position A	No continuity
Overturned B	Continuity

TIP:
Make sure to turn the switch over to both the left and right.

3. Install the slant detection switch. See “Fuse box” (7-4).

Steering sensor

Steering sensor operation

1. Connect the YDIS to display “Steering sensor.”

2. Turn the handlebar all the way to the left or right.

3. Install a plastic tie ① loosely around the center ⓐ of the handlebar grip, and then hook a spring gauge ② onto the plastic tie ①.

4. Hold the spring gauge ② at a 90° angle from the handlebar grip, and then pull the spring gauge in direction A with a force of approximately 10 kgf (22 lb).

TIP:
At this time, the button ⓑ in the steering sensor ③ will be pushed in direction B.

5. Check that the following is displayed in the “Engine monitor” window of the YDIS.

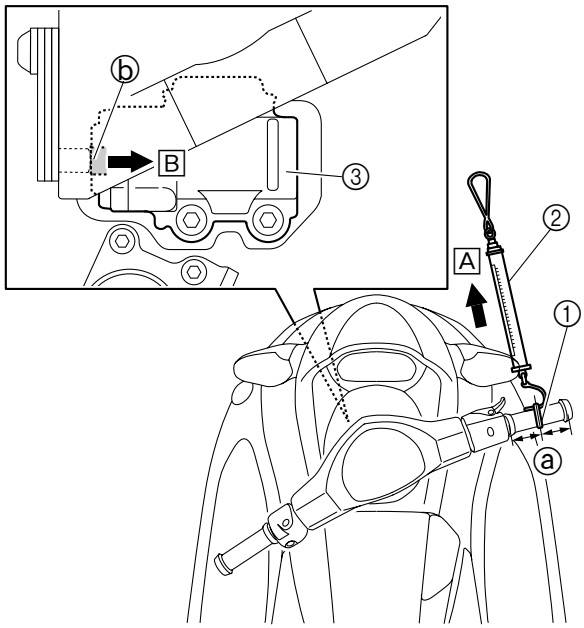

Steering sensor operation:	
Handlebar	YDIS display
Not pulled	OFF
Pulled	ON

6. Use the same procedure to check that the steering sensor operates correctly when the handlebar is turned to both the left and right. Measure the steering sensor input voltage if the steering sensor does not operate.

Steering sensor input voltage

1. Disconnect the steering sensor coupler ⓐ, and then supply power to the ECM, and then measure the input voltage at the steering sensor coupler terminals (wiring harness end). Replace the steering sensor if within specification. Check the wiring harness if out of specification.

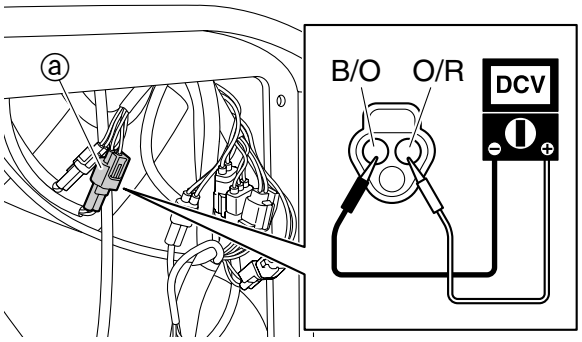

Steering sensor input voltage (reference data): Orange/Red (O/R) – Black/Orange (B/O) 4.75–5.25 V

2. Connect the steering sensor coupler ⓐ.

ECM

ECM input voltage

1. Remove the ECM cover ①, and then disconnect the ECM coupler ⓐ.

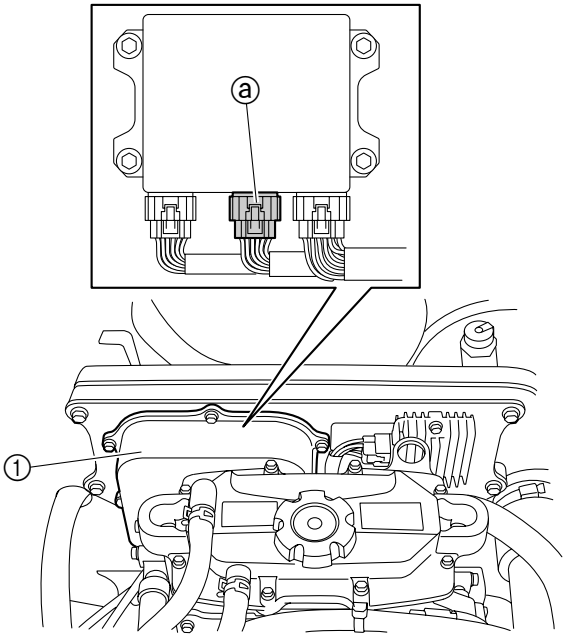

2. Supply power to the ECM, and then measure the input voltage between the ECM coupler terminal (wiring harness end) and ground. Check the ECM circuit continuity if out of specification.

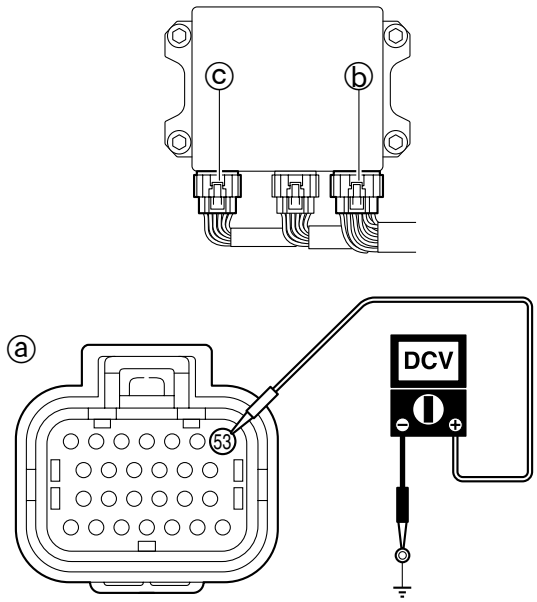

ECM input voltage: Terminal 53 – Ground 12 V (battery voltage)

TIP:
Do not disconnect the coupler ⓑ or coupler ⓒ when measuring the ECM input voltage.

3. Connect the ECM coupler ⓐ, and then install the ECM cover ①.

ECM circuit continuity

1. Disconnect the ECM couplers ⓐ and ⓑ, and then check the continuity between the ECM coupler terminals (wiring harness end) and ground. Replace the wiring harness if there is no continuity.

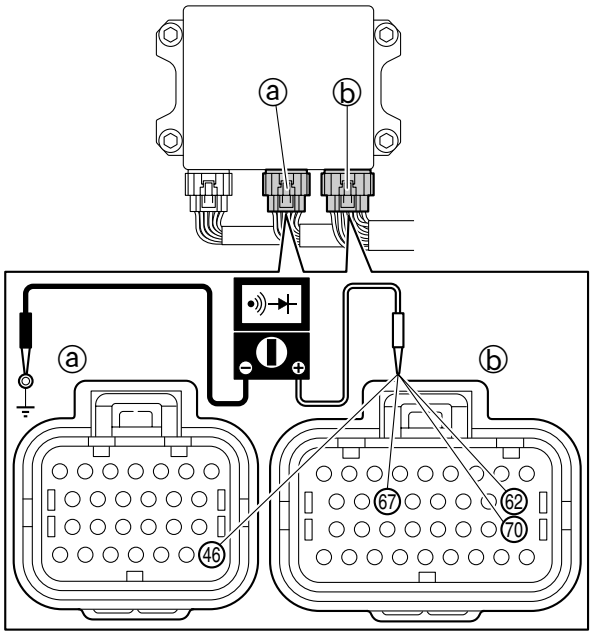

ECM circuit continuity:	
Terminal ㊻ – Ground	Continuity
Terminal ㊷ – Ground	
Terminal ㊼ – Ground	
Terminal ㊿ – Ground	

2. Connect the ECM couplers ⓐ and ⓑ.

Earth plate

1. Remove the earth plate. See “Oil tank” (5-36).

2. Check the continuity between each terminal ⓐ and the housing ⓑ. Replace the earth plate if there is no continuity.

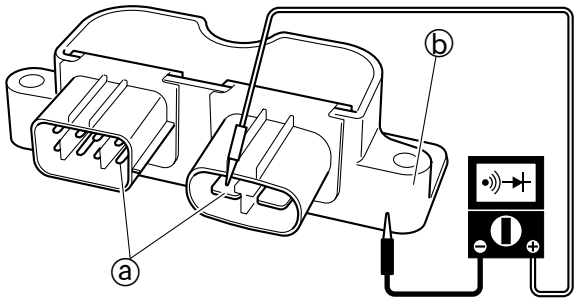

3. Install the earth plate. See “Oil tank” (5-36).

Fuel system

Fuel injector

Fuel injector operation sound

1. Connect the YDIS.

2. Using the “Stationary test” of the YDIS, listen for the fuel injector operation sound. Measure the fuel injector input voltage if it does not sound.

Fuel injector input voltage

1. Disconnect the fuel injector couplers ⓐ, and then supply power to the ECM, and then measure the input voltage between the fuel injector coupler terminals (wiring harness end) and ground. Measure the fuel injector resistance if within specification. Check the wiring harness if out of specification.

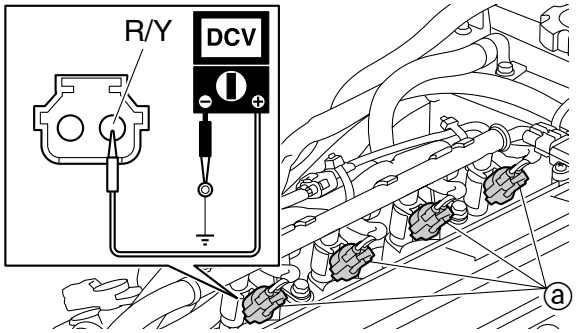

Fuel injector input voltage:
Red/Yellow (R/Y) – Ground
12 V (battery voltage)

2. Connect the fuel injector couplers ⓐ.

Fuel injector resistance

1. Remove the fuel injectors. See “Fuel pump module, fuel hose, and fuel rail” (4-1), and then measure the fuel injector resistance. Replace the fuel injector if out of specification.

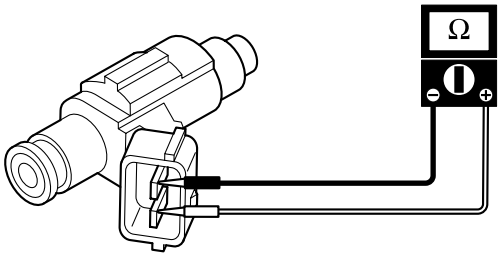

Fuel injector resistance at 20 °C (68 °F) (reference data): 11.5–12.5 Ω

2. Install the fuel injectors. See “Fuel pump module, fuel hose, and fuel rail” (4-1).

Fuel pump module

Fuel pump module operation sound

1. Connect the YDIS.

2. Using the “Stationary test” of the YDIS, listen for the fuel pump module operation sound. Measure the fuel pump module input voltage if it does not sound.

Fuel pump module input voltage

1. Disconnect the fuel pump module coupler ⓐ, and then supply power to the ECM, and then measure the input voltage at the fuel pump module coupler terminals (wiring harness end). Replace the fuel pump module if within specification. Check the wiring harness if out of specification.

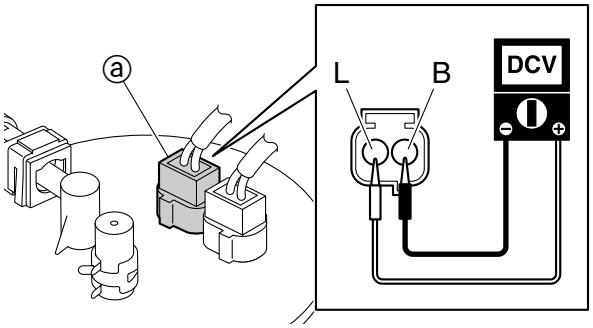

Fuel pump module input voltage: Blue (L) – Black (B) 12 V (battery voltage)

TIP:

After the unlock button is pushed, voltage will only be applied to the fuel pump module for 3 seconds.

2. Connect the fuel pump module coupler ⓐ.

Fuel sender resistance

1. Remove the fuel pump module assy. See “Fuel pump module, fuel hose, and fuel rail” (4-1).

2. Measure the fuel sender resistance. Replace the fuel sender if out of specifications.

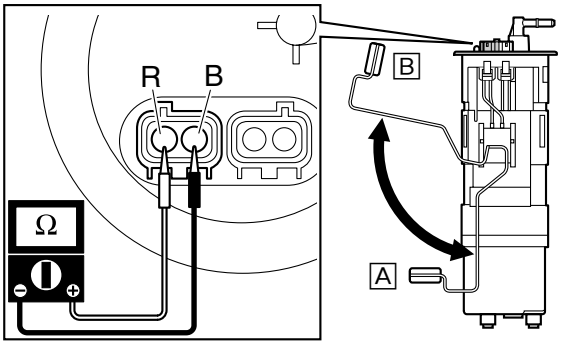

Fuel sender resistance at 20 °C (68 °F) (reference data):	
Float position	Red (R) – Black (B)
Lower position A	133.5–136.5 Ω
Upper position B	5.0–7.0 Ω

3. Install the fuel pump module assy. See “Fuel pump module, fuel hose, and fuel rail” (4-1).

Starting system

Fuse

1. Check the fuse for continuity. Replace if there is no continuity.

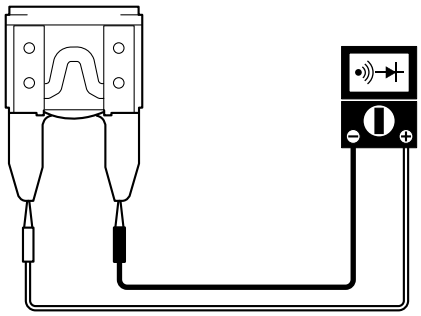

Left handlebar switch assy.

Engine start switch continuity

1. Disconnect the left handlebar switch coupler (white coupler). See “Handlebar and handlebar switch assy.” (8-2).

2. Check the engine start switch for continuity. Replace the left handlebar switch assy. if out of specification.

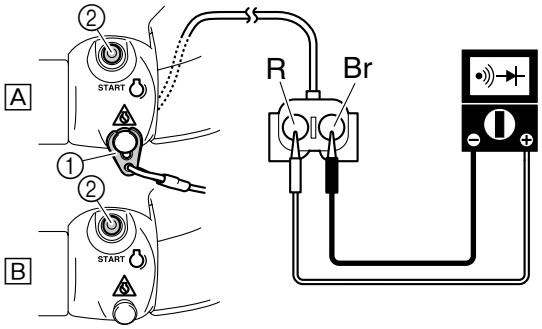

Engine start switch continuity:		
Clip ①	Engine start switch ②	Red (R) – Brown (Br)
Installed A	Free	No continuity
	Pushed	Continuity
Removed B	Free	No continuity
	Pushed	No continuity

3. Connect the left handlebar switch coupler (white coupler). See “Handlebar and handlebar switch assy.” (8-2).

Engine stop switch continuity

1. Disconnect the left handlebar switch coupler (black coupler). See “Handlebar and handlebar switch assy.” (8-2).

2. Check the engine stop switch for continuity. Replace the left handlebar switch assy. if out of specification.

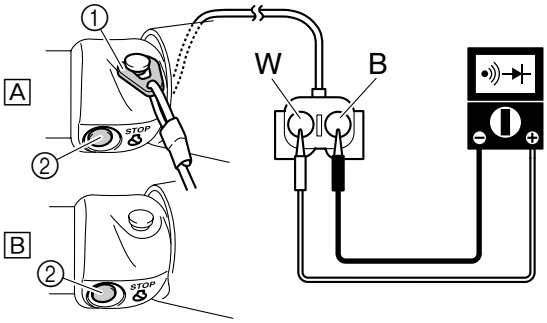

Engine stop switch continuity:		
Clip ①	Engine stop switch ②	White (W) – Black (B)
Installed A	Free	No continuity
	Pushed	Continuity
Removed B	Free	Continuity
	Pushed	Continuity

3. Connect the left handlebar switch coupler (black coupler). See “Handlebar and handlebar switch assy.” (8-2).

Main and fuel pump relay

Main and fuel pump relay input voltage

1. Disconnect the main and fuel pump relay coupler ⓐ, and then measure the input voltage between the main and fuel pump relay coupler terminals ③ or ⑤ (wring harness end) and ground.

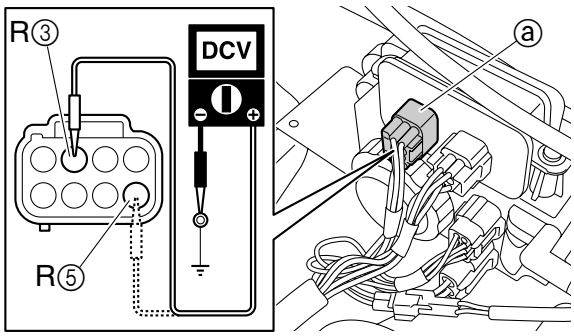

Main and fuel pump relay input voltage:
Red (R) – Ground
12 V (battery voltage)

2. Connect the main and fuel pump relay coupler ⓐ.

Main relay continuity

1. Remove the main and fuel pump relay. See “Fuse box” (7-4).

2. Connect the tester leads to the main and fuel pump relay terminals ⑤ and ⑥ or to the terminals ⑤ and ⑦.

3. Connect the positive battery lead to the main and fuel pump relay terminal ② or ③.

4. Connect the negative battery lead to the main and fuel pump relay terminal ①.

5. Check the continuity between the terminals ⑤ and ⑥ or the terminals ⑤ and ⑦. Replace the main and fuel pump relay if out of specification.

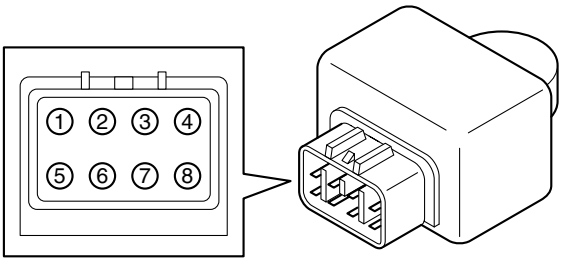

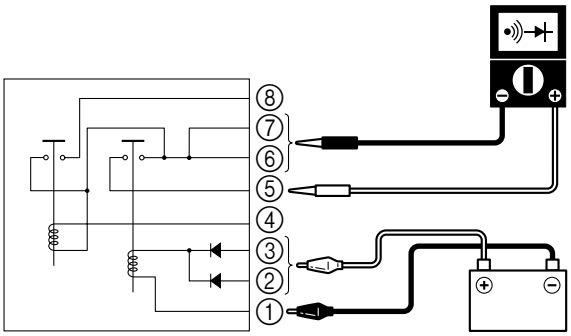

Main relay continuity:	
Battery lead ② or ③ – ①	Terminal ⑤ – ⑥ or ⑦
Disconnected	No continuity
Connected	Continuity

6. Install the main and fuel pump relay. See “Fuse box” (7-4).

Fuel pump relay continuity

1. Remove the main and fuel pump relay. See “Fuse box” (7-4).

2. Connect the tester leads to the main and fuel pump relay terminals ⑦ and ⑧. ***NOTICE:*** **Do not reverse the battery leads, otherwise the main and fuel pump relay may be seriously damaged.**

3. Connect the positive battery lead to the main and fuel pump relay terminal ⑥.

4. Connect the negative battery lead to the main and fuel pump relay terminal ④.

5. Check the continuity between the terminals ⑦ and ⑧. Replace the main and fuel pump relay if out of specification.

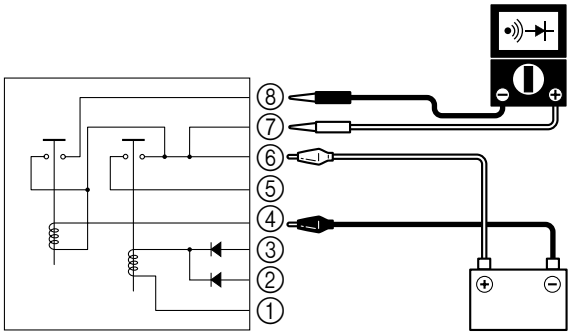

Fuel pump relay continuity:	
Battery lead ⑥ – ④	Terminal ⑦ – ⑧
Disconnected	No continuity
Connected	Continuity

6. Install the main and fuel pump relay. See “Fuse box” (7-4).

Starter relay

Starter relay input voltage

1. Remove the starter relay. See “Fuse box” (7-4).

2. Slide the boot away from the starter relay terminal ①, and then measure the input voltage between the starter relay terminal ① and ground.

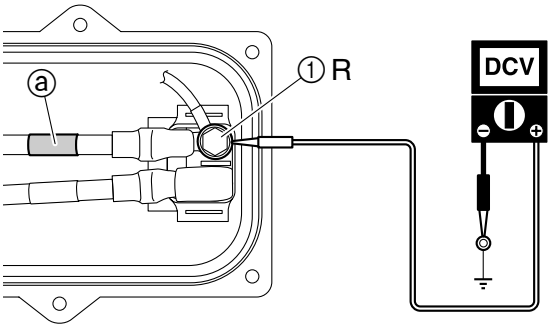

Starter relay input voltage:
Red (R) – Ground
12 V (battery voltage)

TIP:
The positive battery cable is marked with black tape ⓐ.

3. Install the starter relay. See “Fuse box” (7-4).

Starter relay continuity

1. Remove the starter relay. See “Fuse box” (7-4).
2. Connect the tester leads between the starter relay terminals ① and ②.
3. Connect the positive battery lead to the terminal ⓐ, and the negative battery lead to the terminal ⓑ.
4. Check the continuity between the starter relay terminals ① and ②. Replace the starter relay if out of specification.

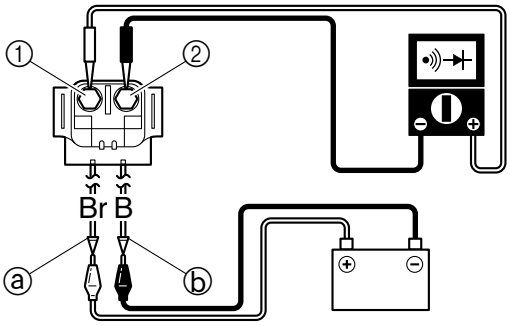

Starter relay continuity:	
Battery lead ⓐ – ⓑ	Terminal ① – ②
Disconnected	No continuity
Connected	Continuity

5. Install the starter relay. See “Fuse box” (7-4).

Starter motor

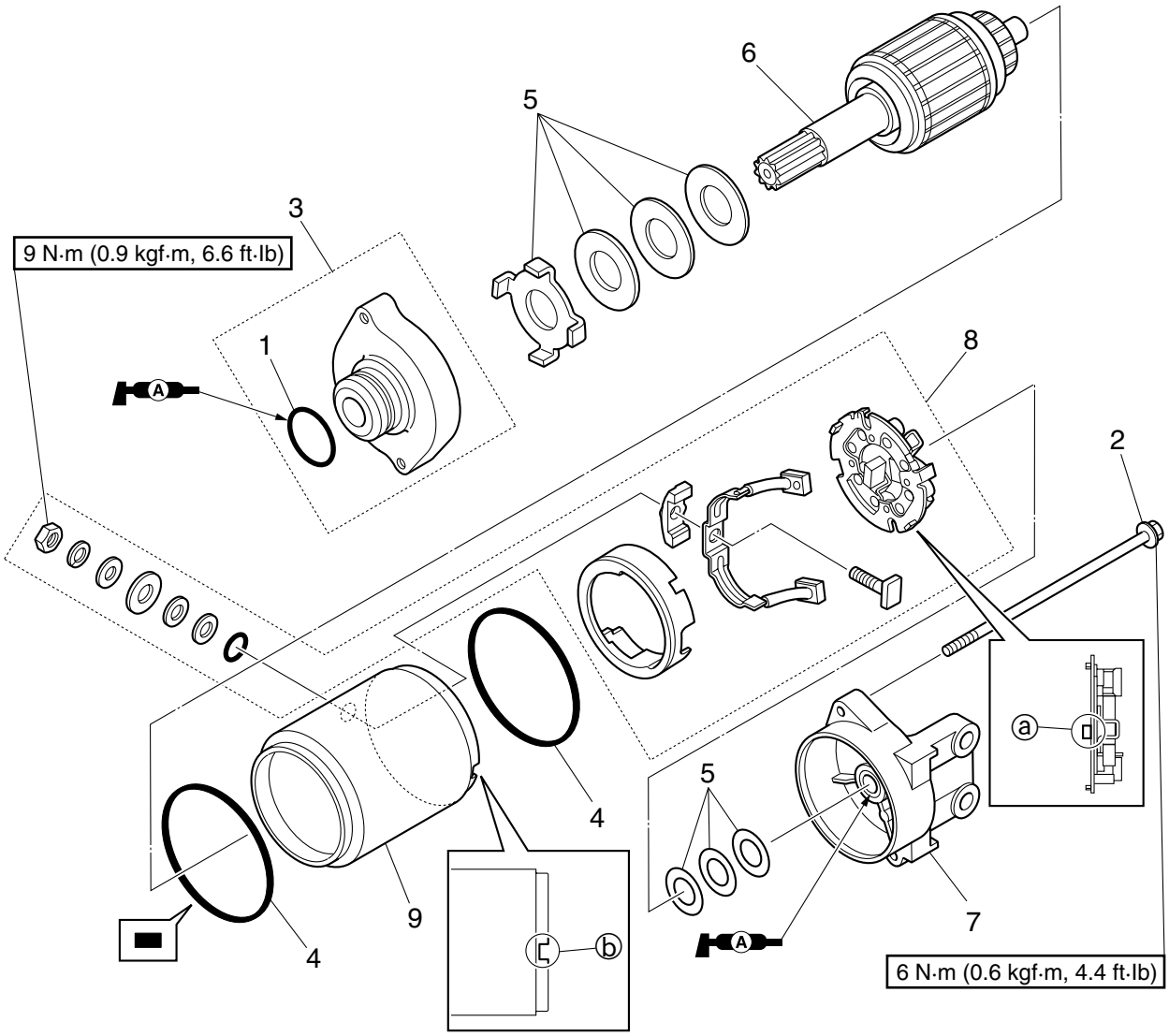

No.	Part name	Q'ty	Remarks
1	O-ring	1	**Not reusable**
2	Bolt	2	M5 × 114 mm
3	Front cover assy.	1	
4	O-ring	2	**Not reusable**
5	Washer set	1	
6	Armature	1	
7	Rear cover assy.	1	
8	Brush holder assy.	1	ⓐ Protrusion
9	Starter motor yoke	1	ⓑ Notch

Starter motor operation

1. Remove the starter motor. See “Wiring harness assy. and starter motor” (5-14).

2. Hold the starter motor in a vise using aluminum plates on both sides.

3. Connect the positive battery cable ① to the starter motor terminal bolt ⓐ.

4. Connect the negative battery cable ② to the starter motor body ⓑ, and then check the starter motor operation. **WARNING! Do not touch the armature shaft ⓒ.**

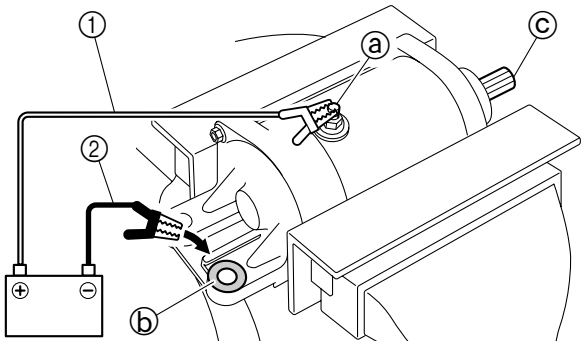

TIP:
- Check the starter motor operation for a few seconds.
- If the starter motor is disassembled, make sure to check the operation again after assembling it.

5. Disconnect the negative battery cable, and then the positive battery cable from the battery terminals.

6. Install the starter motor. See “Wiring harness assy. and starter motor” (5-14).

Starter motor disassembly

1. Remove the O-ring ①, bolts ②, front cover ③, O-ring ④, and washers ⑤.

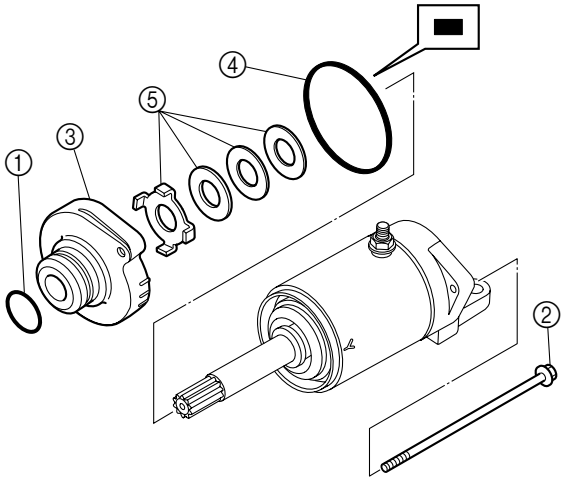

2. Remove the armature ⑥, rear cover ⑦, and O-ring ④.

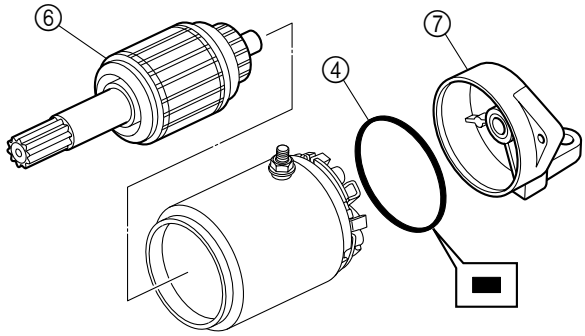

3. Remove the nut ⓐ and brush holder assy. ⑧.

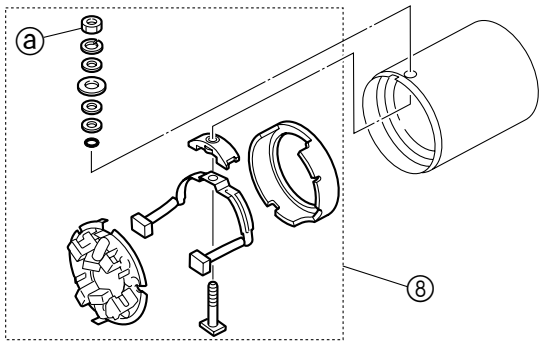

Armature

Armature appearance

1. Check the armature. Replace if damaged or worn.

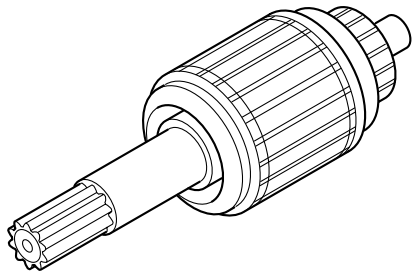

2. Check the commutator. Clean with 600-grit sandpaper and compressed air if dirty.

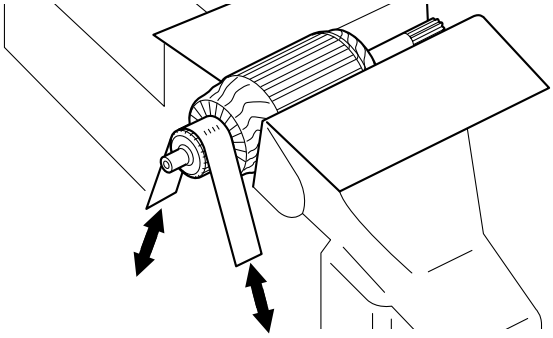

Commutator diameter

1. Measure the commutator diameter ⓐ. Replace the armature if below specification.

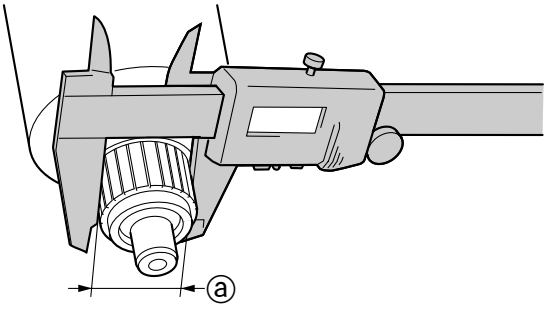

Commutator diameter ⓐ: 27.0–28.0 mm (1.06–1.10 in)

Commutator undercut

1. Measure the commutator undercut ⓐ. Replace the armature if below specification.

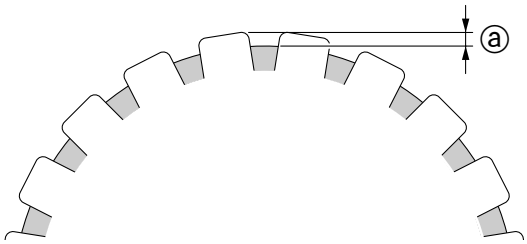

Commutator undercut ⓐ (reference data): 0.2–0.7 mm (0.008–0.028 in)

Armature continuity

1. Check the armature for continuity. Replace if out of specification.

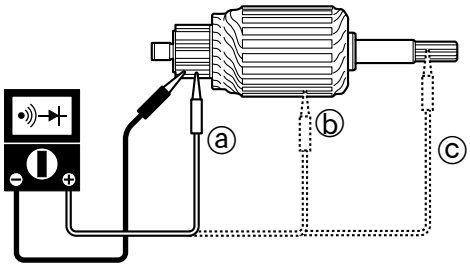

Armature continuity:	
Commutator segments ⓐ	Continuity
Segment ⓐ – Armature core ⓑ	No continuity
Segment ⓐ – Armature shaft ⓒ	No continuity

Front and rear cover

1. Check the front cover ①, rear cover ②, and metal ⓐ. Replace if cracked or damaged.

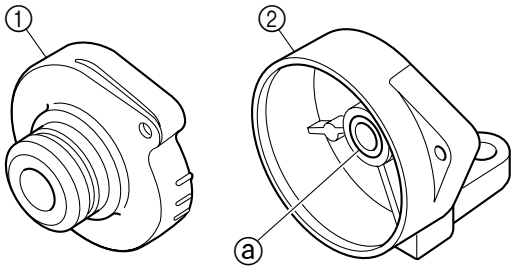

Brush holder

Brush length

1. Measure the brush length ⓐ. Replace the brush holder assy. if below specification.

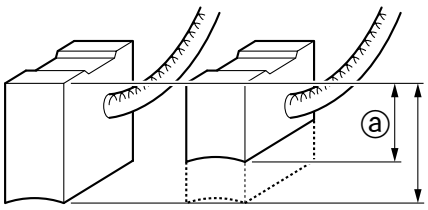

Brush length ⓐ: 6.5–12.5 mm (0.26–0.49 in)

Brush holder assy. continuity

1. Check the brush holder assy. for continuity. Replace if out specification.

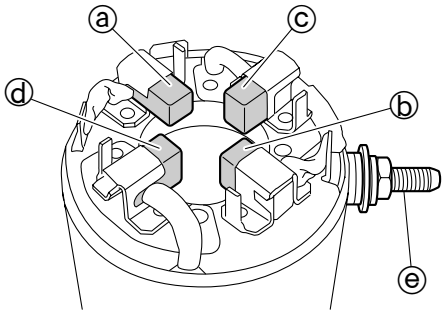

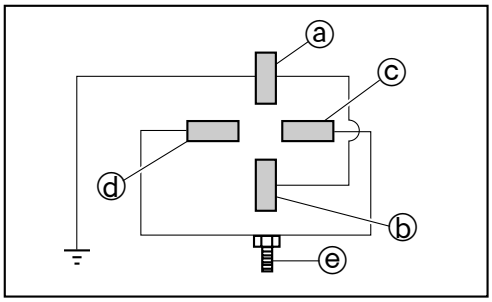

Brush holder assy. continuity:	
Brush ⓐ – Brush ⓑ Brush ⓒ – Brush ⓓ Brush ⓒ – Terminal ⓔ Brush ⓓ – Terminal ⓔ	Continuity
For all brush and terminal combinations not listed above.	No continuity

Starter motor assembly

NOTICE

Do not reuse an O-ring, always replace it with a new one.

1. Install the brush holder assy. ①, and then tighten the nut ⓐ to the specified torque.

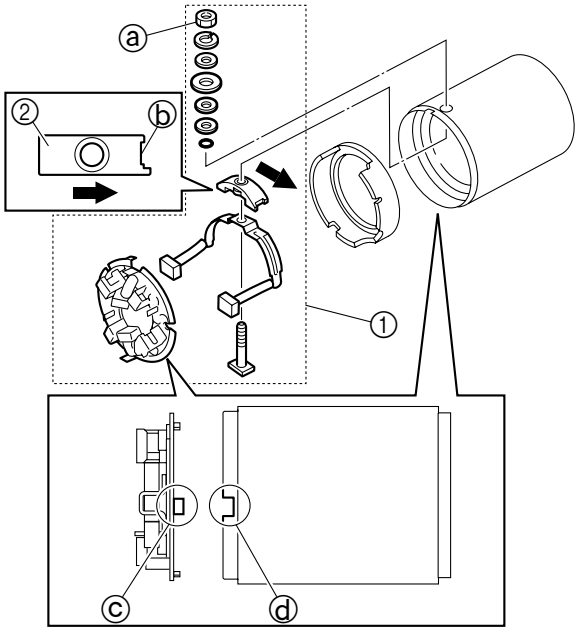

Starter motor terminal nut ⓐ: 9 N·m (0.9 kgf·m, 6.6 ft·lb)

TIP:

- Install the terminal insulator ② so that the notch ⓑ in the insulator is facing in the direction of the arrow.
- Align the protrusion ⓒ on the brush holder stay with the notch ⓓ on the starter motor yoke.

2. Push the brushes ⓔ into holders, and then install the armature ③ to the brush holder assy. ①.

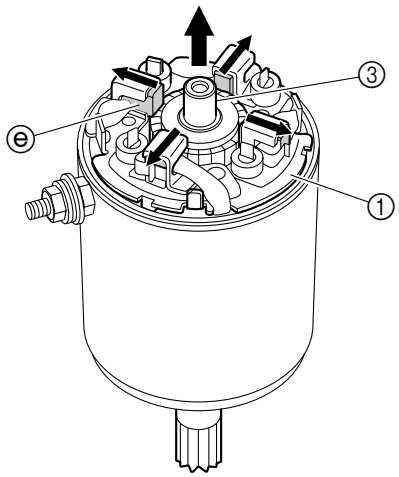

3. Install a new O-ring ④ and the rear cover assy. ⑤.

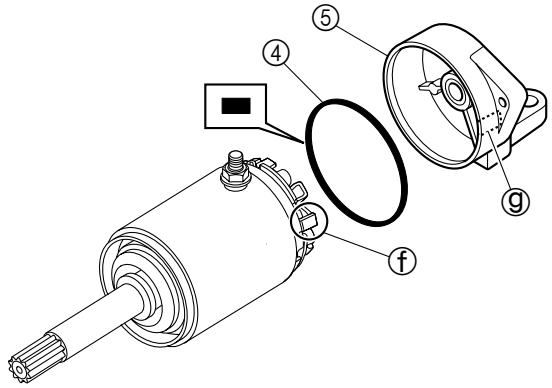

TIP:
Align the protrusion ⓕ on the brush holder stay with the groove ⓖ on the rear cover assy.

4. Install the washers ⑥, a new O-ring ④, front cover ⑦, a new O-ring ⑧, and then tighten the bolts ⑨ to the specified torque.

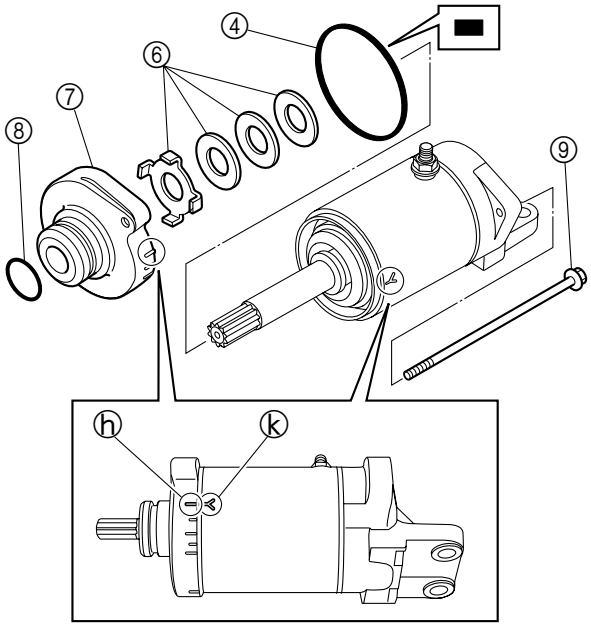

Rear cover bolt ⑨: 6 N·m (0.6 kgf·m, 4.4 ft·lb)

TIP:
Align the alignment mark ⓗ on the front cover assy. with the alignment mark ⓚ on the starter motor yoke.

Remote control system (VX Cruiser and VX Deluxe)

Remote control transmitter

Remote control transmitter operation

1. Push the unlock button ⓐ. The buzzer sounds 2 times, and then check that the “SECURITY” indicator light ⓑ comes on.

2. Push the unlock button ⓐ for more than 4 seconds. The buzzer sounds 3 times, and then check that the “L-MODE” indicator light ⓒ comes on.

3. Push the lock button ⓓ. The buzzer sounds once, and then check that the “SECURITY” indicator light ⓑ goes off.

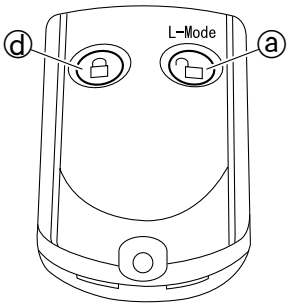

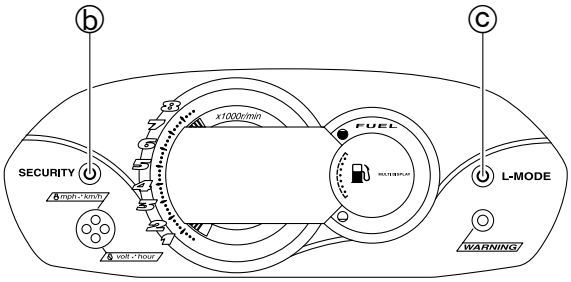

Number of beeps	Yamaha Security System mode
1 beep	Lock
2 beeps	Unlock (normal mode)
3 beeps	L-MODE (low-rpm mode)

TIP:
While the engine is running, input from the remote control transmitter is not received.

Remote control transmitter battery voltage

1. Loosen the screws ⓐ in the order 1, 2, and so on, and then remove the transmitter cover ⓑ. ***NOTICE:*** **Do not touch the internal parts except the battery.**

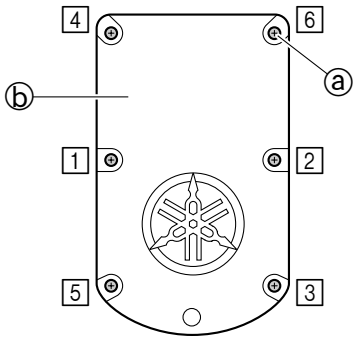

2. Remove the battery (CR2016) ⓒ. ***NOTICE:*** **Do not touch the battery directly with your hands. Use a pair of non-conductive tweezers to replace the battery.**

3. Measure the battery voltage. Replace the remote control transmitter battery if below specification.

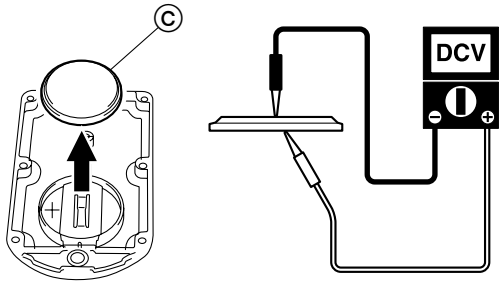

Remote control transmitter battery voltage: 3.0 V

TIP:
Refer to local hazardous waste regulations when disposing of transmitter batteries.

4. Install the battery (CR2016) ⓒ and transmitter cover ⓑ.

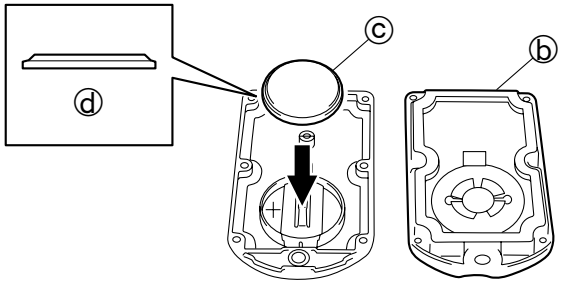

TIP:
Install the battery (CR2016) ⓒ with the positive side ⓓ facing down.

5. Tighten the screws ⓐ to the specified torque in the order 1, 2, and so on.

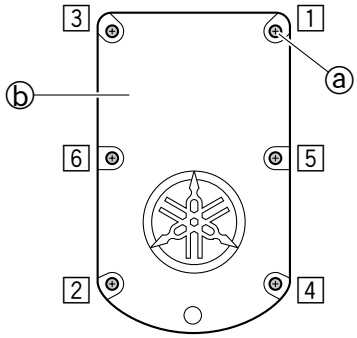

Transmitter cover screw ⓐ: 0.1 N·m (0.01 kgf·m, 0.1 ft·lb)

Remote control receiver

Remote control receiver input voltage

1. Disconnect the remote control receiver coupler ⓐ, and then measure the input voltage at the remote control receiver coupler terminals (wiring harness end).

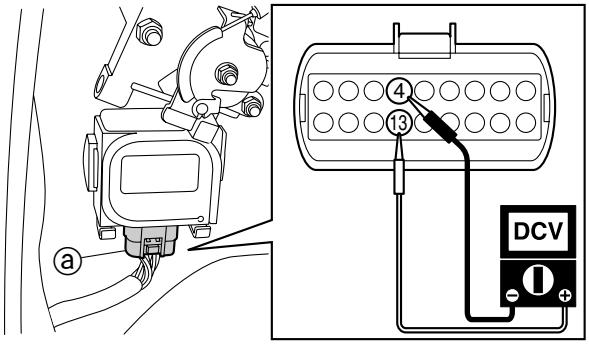

Remote control receiver input voltage: Red (R) – Black (B) 12 V (battery voltage)

2. Connect the remote control receiver coupler ⓐ.

Remote control receiver output voltage

1. Disconnect the multifunction meter coupler ⓐ from the remote control receiver, and then supply power to the ECM, and then measure the remote control receiver output voltage at the multifunction meter coupler terminal (wiring harness end) and ground. Replace the remote control receiver if out of specification.

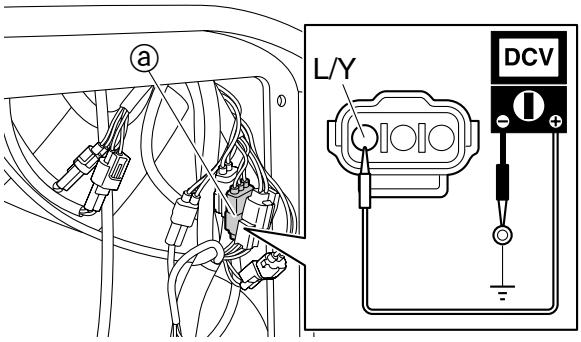

Remote control receiver output voltage (reference data): Blue/Yellow (L/Y) – Ground 11.0–12.0 V

2. Connect the multifunction meter coupler ⓐ.

Transmitter registration

TIP:

- Each remote control transmitter ① has a unique ID code.
- To add or re-register the ID code of a remote control transmitter to the remote control receiver ②, connect the entry box ③.

1. Connect the entry box to the 2-pin communication coupler ⓐ.

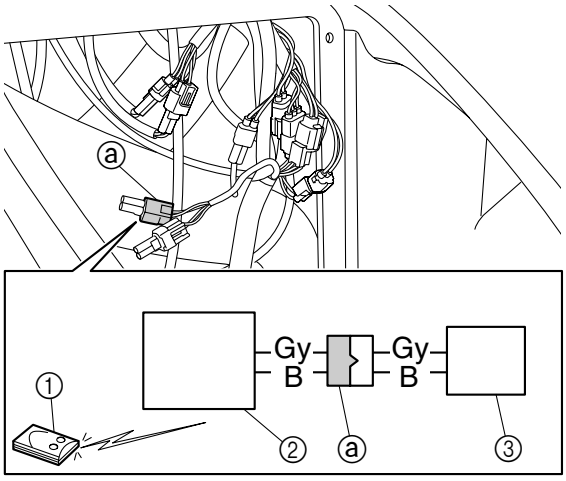

2. Push the lock button ⓑ or unlock button ⓒ to transmit the ID code from the remote control transmitter to be registered.

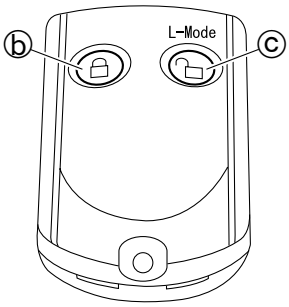

TIP:
- At this time, the system enters the registration mode to register the first code. All existing ID codes will be deleted from the remote control receiver.
- The “SECURITY” indicator light ⓓ blinks when the registration of the ID code has been completed. (If the registration could not be completed, the “SECURITY” indicator light comes on. Re-transmit the ID code.)

3. After checking that the registration of the ID code has been completed using the “SECURITY” indicator light ⓓ, transmit the next ID code.

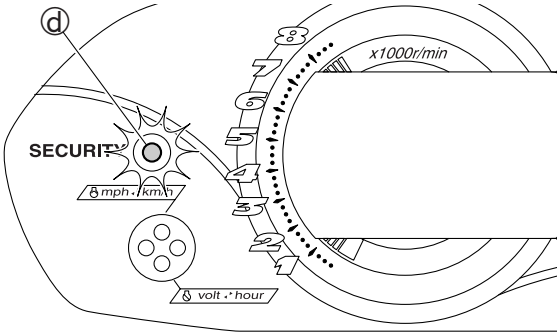

TIP:
- Up to 5 remote control transmitters can be registered in any sequence, regardless of whether they are original equipment or additional transmitters.
- The same ID code cannot be registered twice in the remote control receiver.

4. After ID code registration has been completed, disconnect the entry box to exit the registration mode.

Indication system

Multifunction meter

Multifunction meter appearance

1. Check the multifunction meter external appearance. Replace the multifunction meter if there is cracked meter hosing, fogged meter, or water intrusion.

Multifunction meter operation

1. Supply power to the ECM, and then check that all indicator lights ⓐ and display elements ⓑ on the multifunction meter come on. Replace if it does not operate correctly.

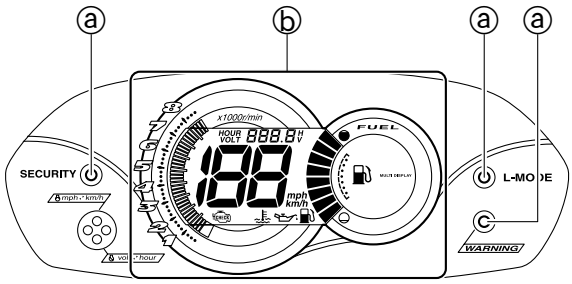

TIP:
When the multifunction meter is activated, all displays come on for 2 seconds, and then the multifunction meter starts to operate normally.

2. Check the multifunction meter display. Replace the multifunction meter if there is intermittent or missing segment ⓒ.

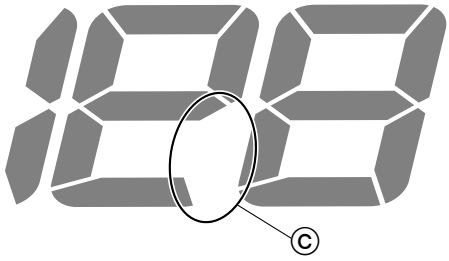

Multifunction meter input voltage

1. Disconnect the multifunction meter coupler ⓐ, and then supply power to the ECM, and then measure the input voltage at the multifunction meter coupler terminals (wiring harness end). Replace the wiring harness if out of specification. Replace the multifunction meter if within specification and there is no display on the multifunction meter.

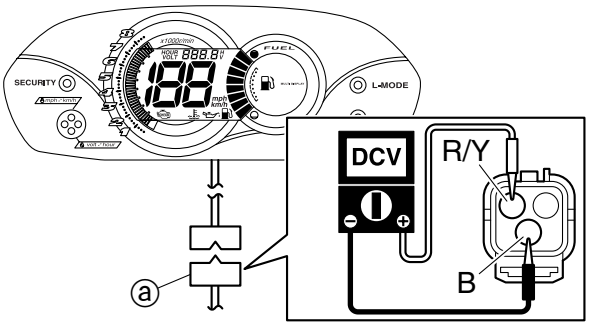

Multifunction meter input voltage: Red/Yellow (R/Y) – Black (B) 12 V (battery voltage)

2. Connect the multifunction meter coupler ⓐ.

Speed sensor

Speed sensor appearance

1. Remove the speed sensor. See “Intake grate and ride plate” (6-1), and then check the speed sensor paddle wheel ⓐ. Replace the speed sensor if there are cracks, damage, or rough movement.

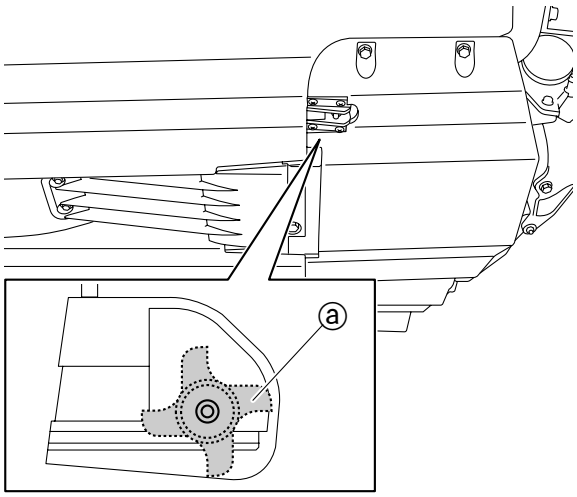

2. Install the speed sensor. See “Intake grate and ride plate” (6-1).

Speed sensor output voltage

1. Disconnect the speed sensor coupler ⓐ.

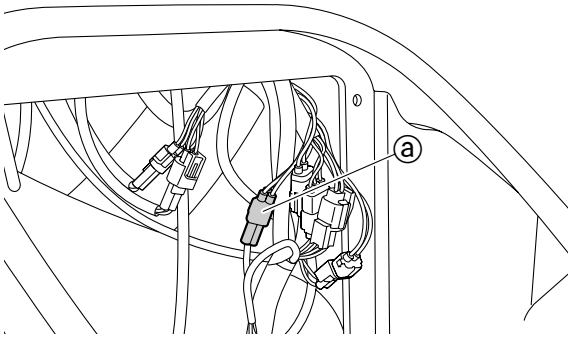

2. Connect the positive battery lead to the terminal ①, and the negative battery lead to the terminal ②.

3. Connect the tester leads between the terminal ③ and terminal ②.

4. Rotate the paddle wheel ⓑ by hand and measure the output voltage between the terminal ③ and terminal ②. Replace if out of specification

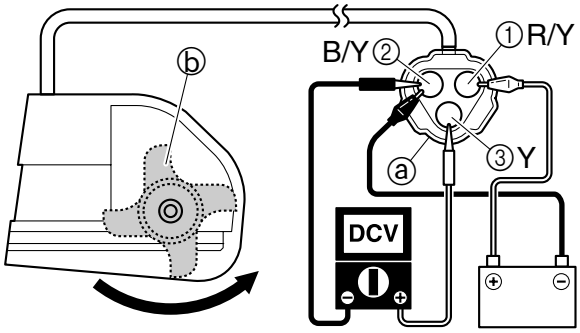

Speed sensor output voltage (dependant on the paddle wheel position): Yellow (Y) – Black/Yellow (B/Y) Less than 400 mV/More than 11.6 V

5. Connect the speed sensor coupler ⓐ.

Fuel level meter display and fuel level warning indicator

1. Remove the fuel pump module assy. See “Fuel pump module, fuel hose, and fuel rail” (4-1), and then connect the fuel sender coupler ⓐ.

2. Lift the float to the upper position A.

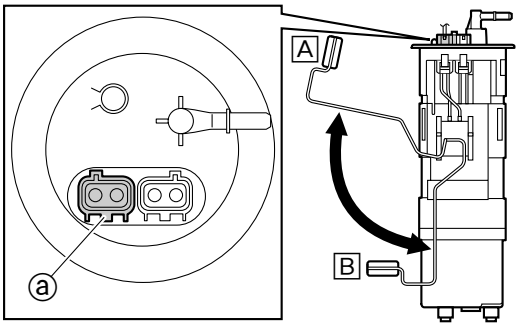

3. Supply power to the ECM, and then check that all fuel level segments come on. Replace if it does not come on.

4. Lower the float to the lowest position B, and then check that the fuel level warning indicator ⓑ, the lowest 2 fuel level segments ⓒ, and the "WARNING" indicator light ⓓ blink. If the indicator, segments, and the light do not blink, replace the multifunction meter.

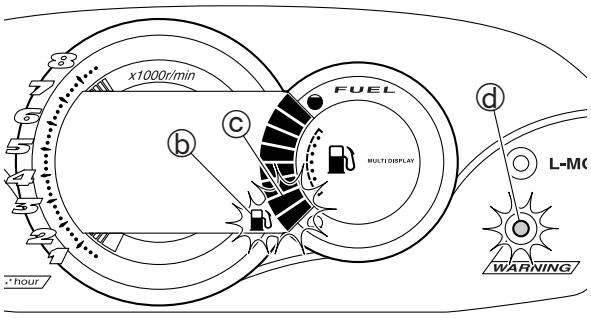

5. Install the fuel pump module assy. See "Fuel pump module, fuel hose, and fuel rail" (4-1).

Check engine warning indicator

1. Disconnect the engine temperature sensor coupler ⓐ.

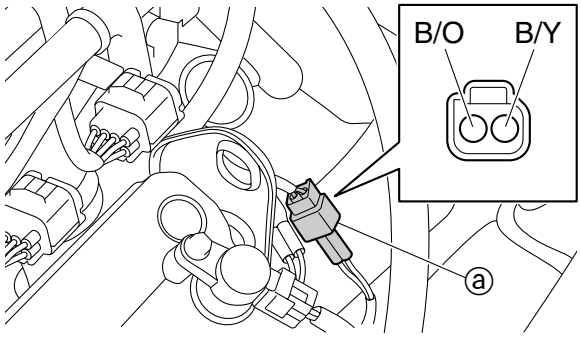

2. Supply power to the ECM, and then check that the "WARNING" indicator light ⓑ and the check engine warning indicator ⓒ begin to blink.

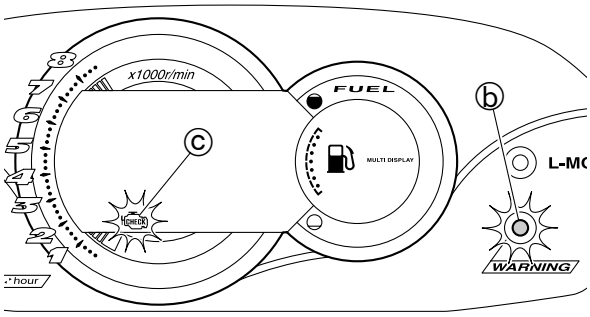

3. If the light and indicator do not blink, check the "Diagnosis record" of the YDIS. If a diagnosis record is available and the light and indicator do not blink, replace the multifunction meter.

4. Connect the engine temperature sensor coupler ⓐ.

Diagnostic display

1. Create a condition so that a diagnostic code is recorded.

2. Supply power to the ECM, and then push the select button ⓐ for approximately 8 seconds and check that the diagnostic code ⓑ is indicated.

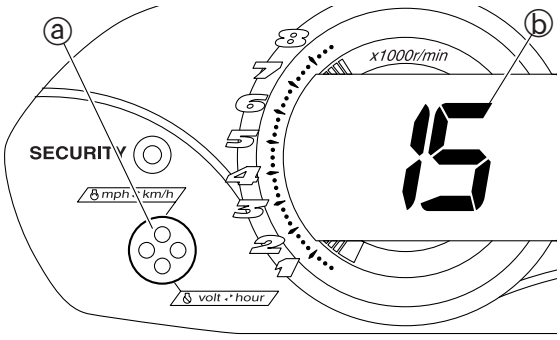

3. If the diagnostic code is not indicated, check the "Diagnosis record" of the YDIS. If a diagnosis record is available and the diagnostic code is not indicated, replace the multifunction meter.

Oil pressure warning indicator

1. Disconnect the oil pressure switch coupler ⓐ, and then ground the terminal.

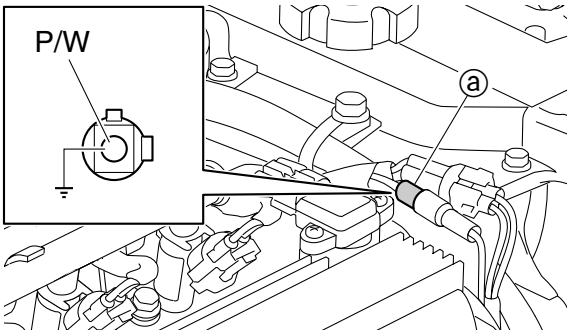

2. Start the engine, and then increase the engine speed to 6000 r/min or more.

3. Check that the “WARNING” indicator light ⓑ and the oil pressure warning indicator ⓒ blink, and the buzzer sounds intermittently.

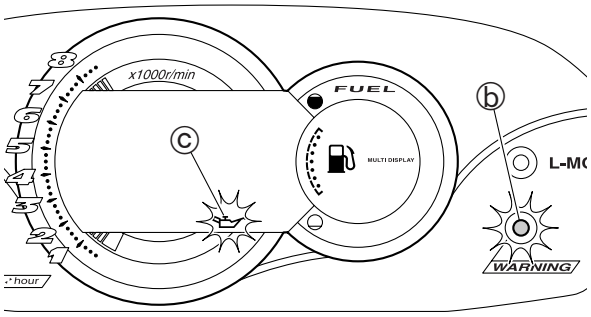

4. If the light and indicator do not blink, check the “Diagnosis record” of the YDIS. If a diagnosis record is available and the light and indicator do not blink, replace the multifunction meter.

5. Connect the oil pressure switch coupler ⓐ.

Engine overheat warning indicator

1. Disconnect the thermoswitch (engine) coupler ⓐ, and then connect the jumper lead ① to the thermoswitch (engine) coupler terminals (wiring harness end).

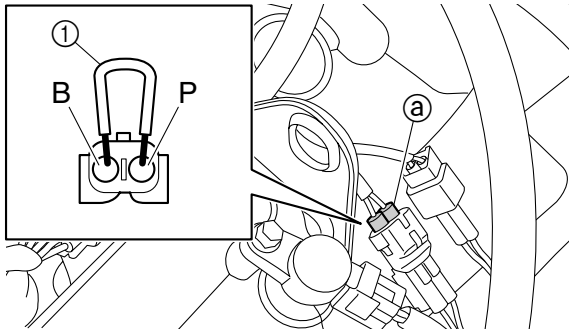

2. Start the engine and operate it at trolling speed for about 2 minutes.

3. Check that the “WARNING” indicator light ⓑ and the engine overheat warning indicator ⓒ blink, and then come on, and the buzzer begins to sound intermittently, and then it sounds continuously.

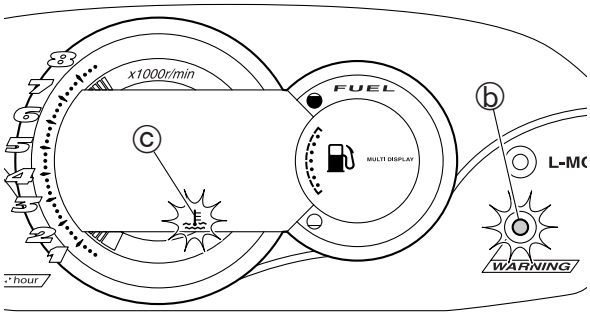

4. If the light and indicator do not blink, check the “Diagnosis record” of the YDIS. If a diagnosis record is available and the light and indicator do not blink, replace the multifunction meter.

5. Connect the thermoswitch (engine) coupler ⓐ.

Buzzer

Buzzer input voltage

1. Disconnect the buzzer coupler ⓐ, and then supply power to the ECM, and then measure the input voltage at the buzzer coupler terminals (wiring harness end). Check the wiring harness if out of specification.

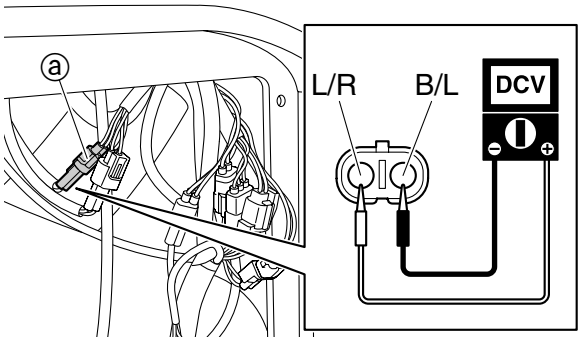

Buzzer input voltage (reference data): Blue/Red (L/R) – Black/Blue (B/L) 11.0–12.0 V

2. Connect the buzzer coupler ⓐ.

Buzzer operation

1. Remove the buzzer. See “Steering master” (8-14), and then connect the positive battery lead to the terminal ① and the negative battery lead to the terminal ②.

2. Check that the buzzer sounds. Replace the buzzer if does not sound.

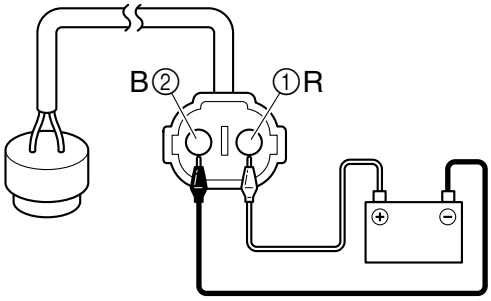

3. Install the buzzer. See “Steering master” (8-14).

— MEMO —

Hull and hood

Steering pad and handlebar cover

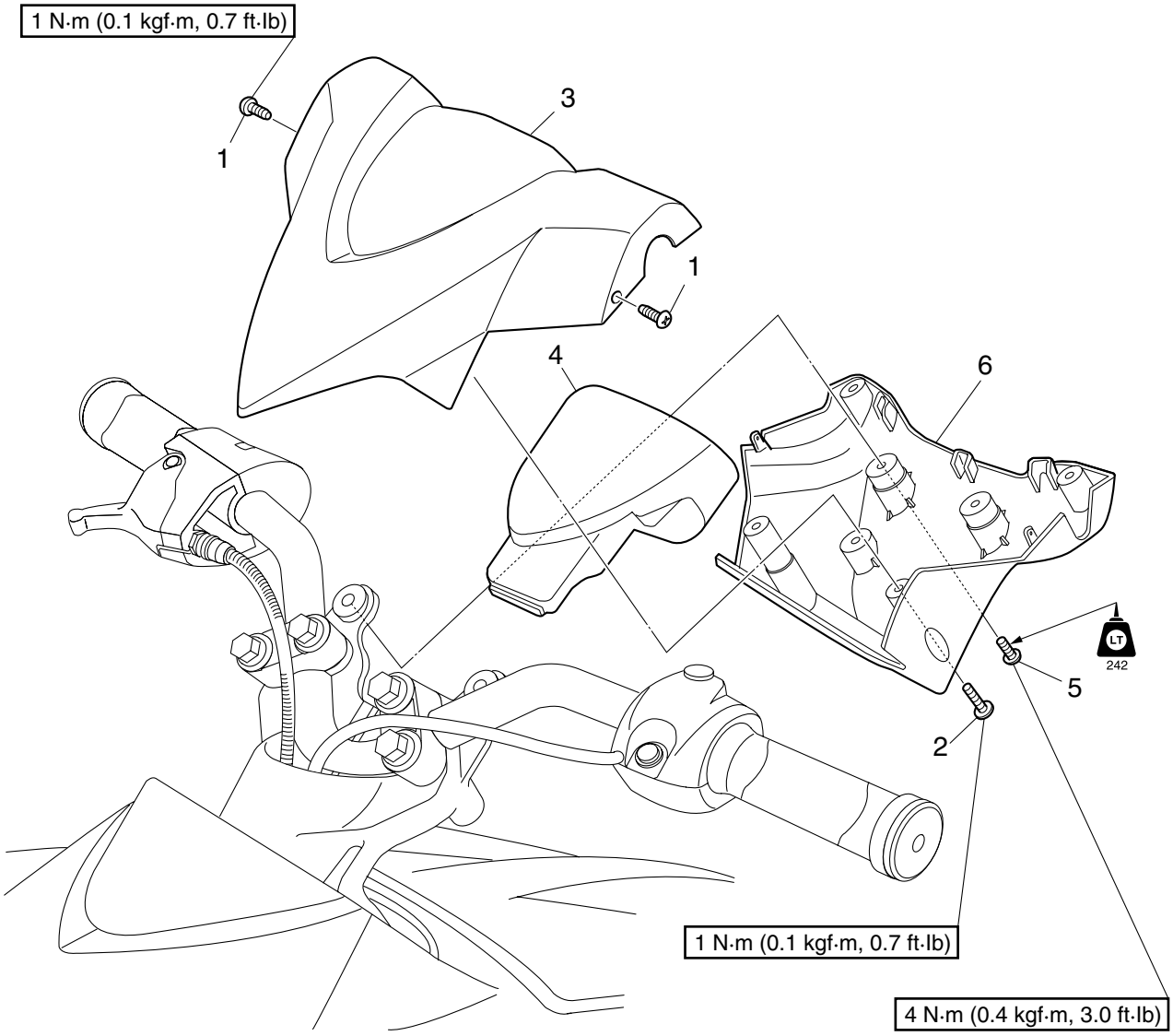

No.	Part name	Q'ty	Remarks
1	Screw	2	ø4 × 10 mm
2	Screw	4	ø5 × 16 mm
3	Upper handlebar cover	1	
4	Steering pad	1	
5	Screw	4	ø6 × 14 mm
6	Lower handlebar cover	1	

Handlebar and handlebar switch assy.

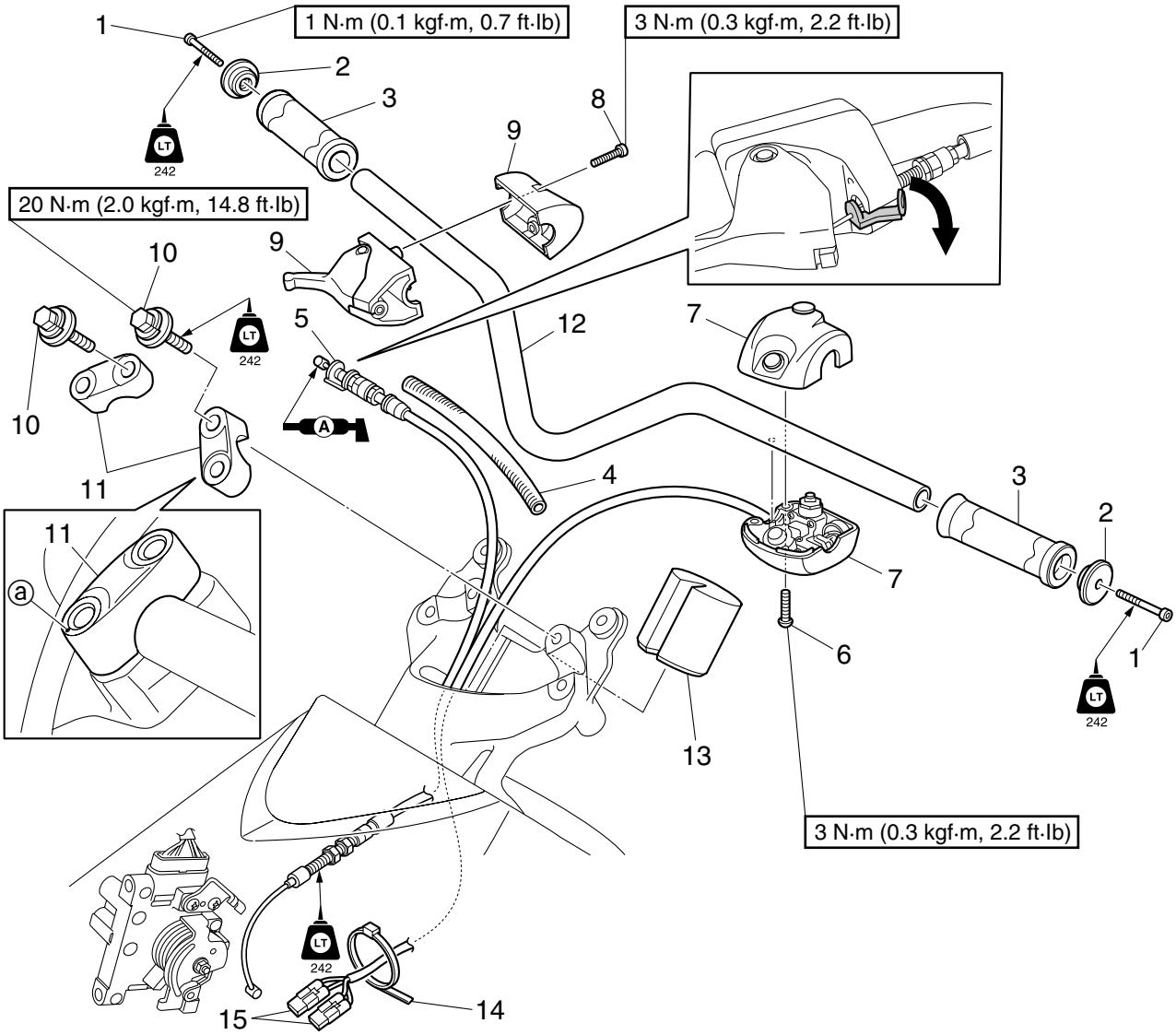

No.	Part name	Q'ty	Remarks
1	Bolt	2	M5 × 35 mm
2	Grip end	2	
3	Handlebar grip	2	
4	Corrugated tube	1	
5	Throttle cable	1	
6	Screw	2	ø5 × 25 mm
7	Left handlebar switch assy.	1	
8	Bolt	2	M5 × 25 mm
9	Throttle lever assy.	1	
10	Bolt	4	M8 × 45 mm
11	Handlebar holder	2	ⓐ Punch mark
12	Handlebar	1	
13	Grommet	1	
14	Plastic tie	1	
15	Left handlebar switch coupler	2	

Left handlebar switch assy. and throttle lever assy.

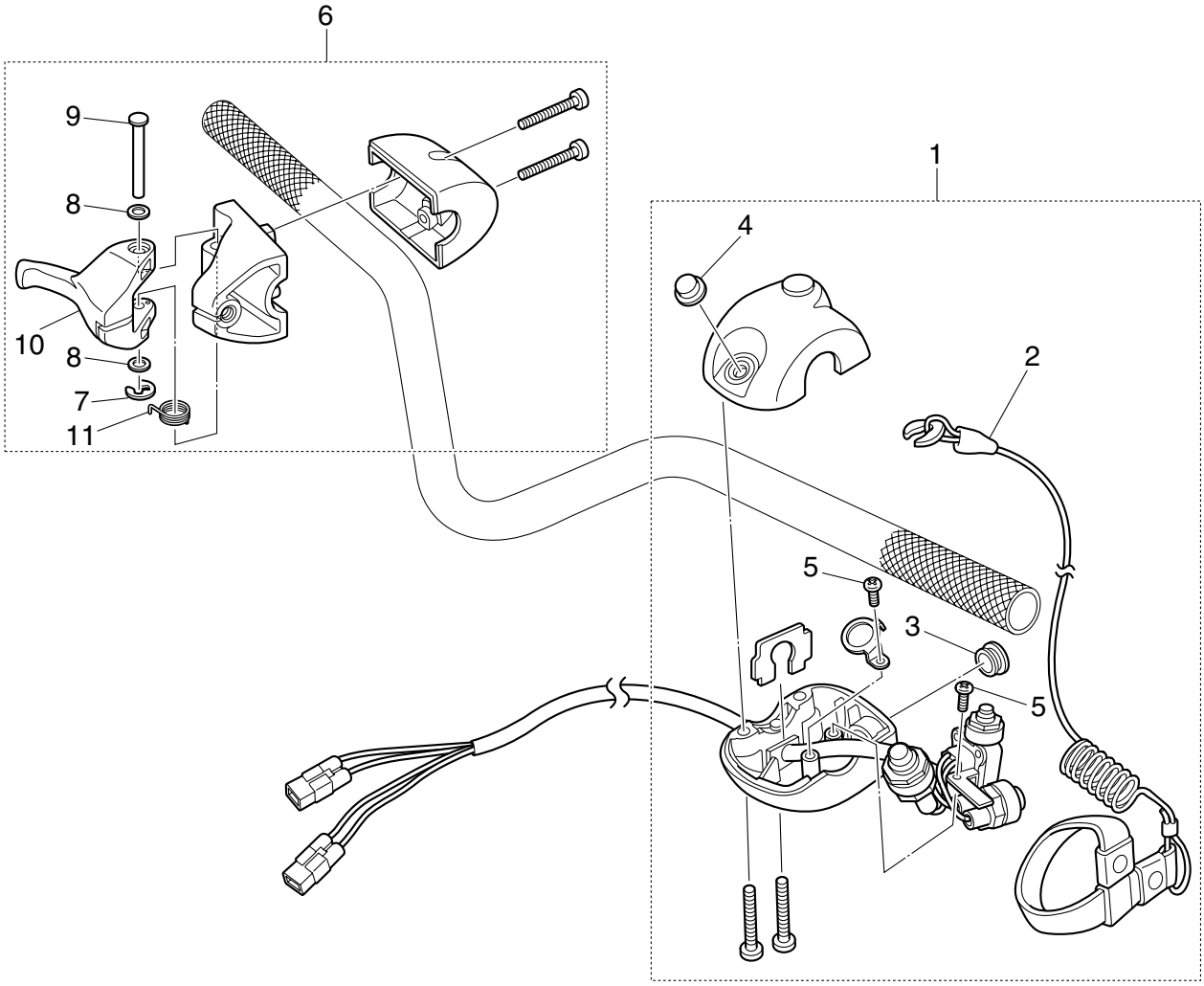

No.	Part name	Q'ty	Remarks
1	Left handlebar switch assy.	1	
2	Engine shut-off cord	1	
3	Stop button assy.	1	
4	Start button assy.	1	
5	Screw	2	
6	Throttle lever assy.	1	
7	E-ring	1	
8	Washer	2	
9	Shaft	1	
10	Lever	1	
11	Spring	1	

Throttle cable removal

1. Remove the corrugated tube ①.

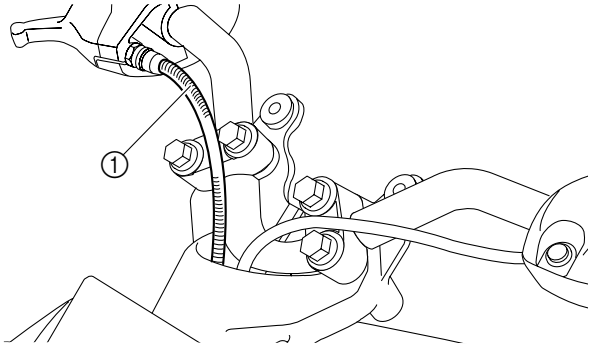

2. Remove the throttle cable ②. ***NOTICE:*** **Make sure to remove the throttle cable seal ⓐ.**

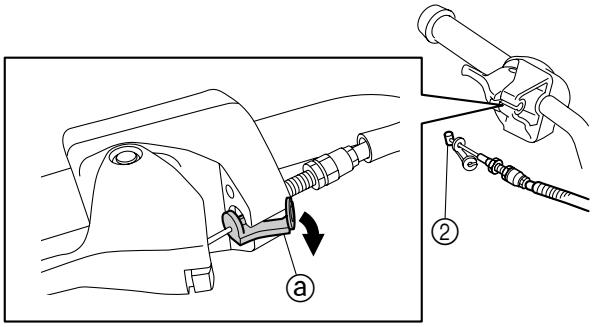

Handlebar check

1. Check the handlebar. Replace if bent, cracked, or damaged.

Left handlebar switch assy. check

1. Check the left handlebar switch assy. Replace if cracked or damaged.

TIP:

To check the continuity of the left handlebar switch assy. See "Left handlebar switch assy." (7-29).

Handlebar assy. installation

NOTICE

After installing the handlebar assy., make sure that the throttle cable and left handlebar switch lead are not pulled when the handlebar is turned to the right and left.

1. Install the left handlebar switch lead ① into the opening ⓐ in the grommet ②, and then install the throttle cable ③ into the opening ⓐ.

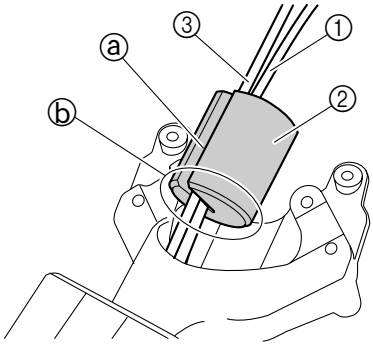

TIP:

Face the chamfered end ⓑ of the grommet ② down, with the opening ⓐ facing forward.

2. Install the grommet ② into the steering master ④.

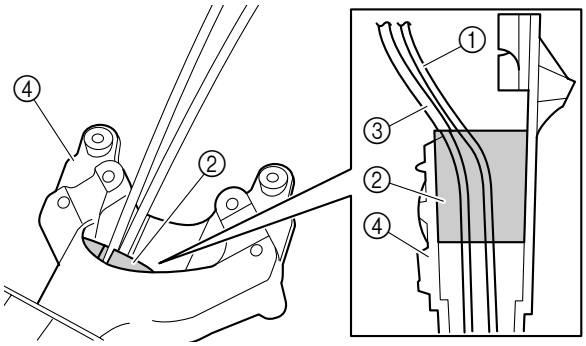

TIP:

Push the grommet ② into the steering master ④ until it is installed securely.

3. Install the handlebar ⑤ and upper handlebar holders ⑥, and then tighten the bolts ⑦ to the specified torque.

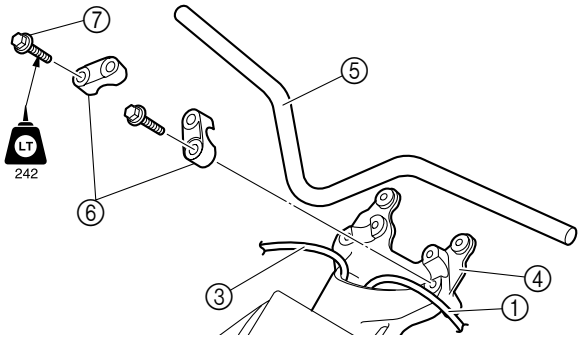

8

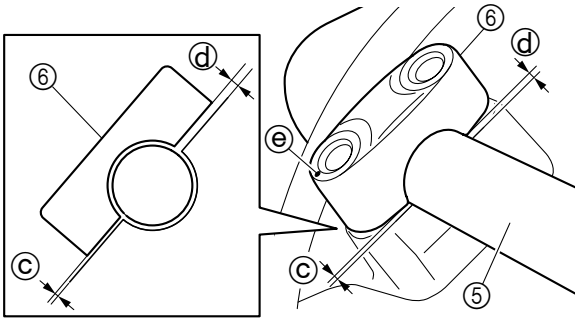

Clearance (reference data):
ⓒ: 0.4 mm (0.02 in)
ⓓ: 1.1 mm (0.09 in)

Handlebar holder bolt ⑦:
20 N·m (2.0 kgf·m, 14.8 ft·lb)

TIP:

- Do not route the left handlebar switch lead ① and throttle cable ③ between the handlebar ⑤ and the steering master ④.
- The upper handlebar holder ⑥ should be installed with the punch mark ⓔ facing down.
- Make sure that clearance ⓒ is narrower than clearance ⓓ.

4. Install the throttle lever assy. ⑧, and then tighten the bolts ⑨ to the specified torque.

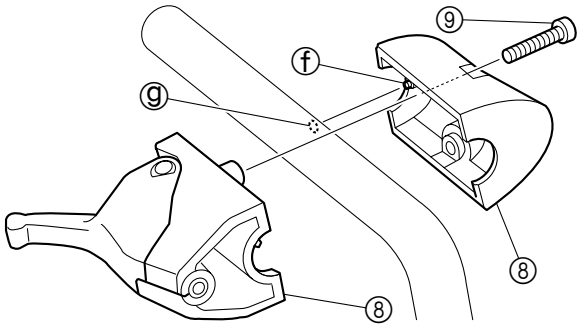

Throttle lever assy. bolt ⑨:
3 N·m (0.3 kgf·m, 2.2 ft·lb)

TIP:

Align the projection ⓕ on the throttle lever assy. with the handlebar hole ⓖ.

5. Install the left handlebar switch assy. ⑩, and then tighten the screws ⑪ to the specified torque.

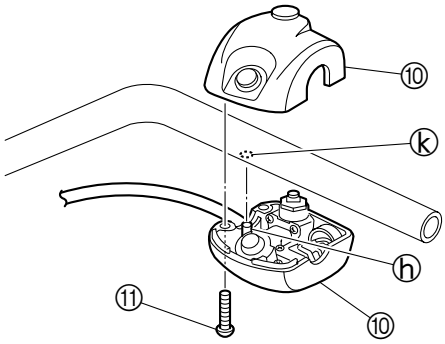

Left handlebar switch screw ⑪:
3 N·m (0.3 kgf·m, 2.2 ft·lb)

TIP:

Align the projection ⓗ on the handlebar switch assy. with the handlebar hole ⓚ.

6. Install the throttle cable end into the throttle lever.

7. Fit the seal ⓜ into the groove in the bracket.

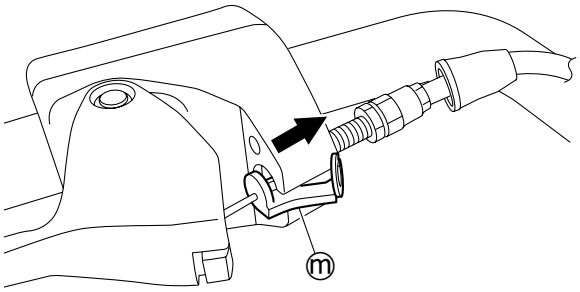

8. Pull the throttle cable ③ in the direction of the arrow shown, and then fit the end of the seal ⓝ around the inner cable.

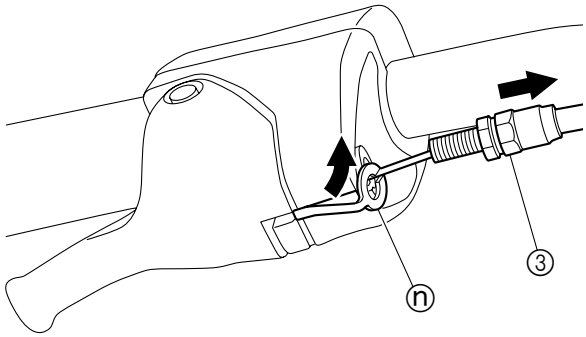

9. Adjust the throttle lever free play ⓟ. See “Throttle lever free play check” (3-2).

10. Tighten the locknut ⑫, and then slide the rubber cover ⑬ to its original position.

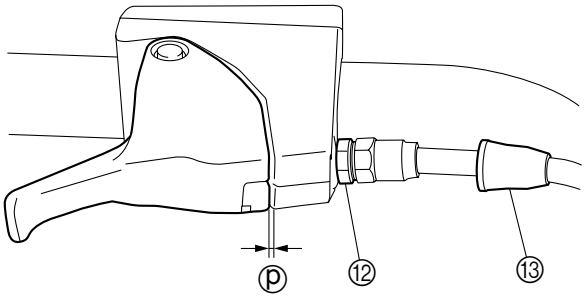

Throttle lever free play ⓟ: 4.0–7.0 mm (0.16–0.28 in)

11. Install the corrugated tube ⑭ onto the throttle cable ③, and then route the throttle cable ③ and left handlebar switch lead ①.

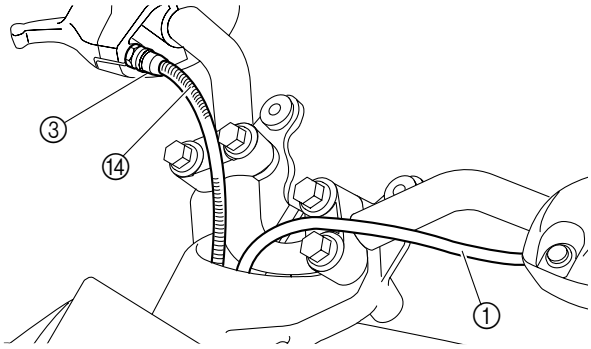

12. Apply adhesive to the handlebars ⓡ and the inner surface of the handlebar grips ⑮.

13. Install the handlebar grips ⑮.

14. Install the grip ends ⑯, and then tighten the grip end bolts ⑰ to the specified torque.

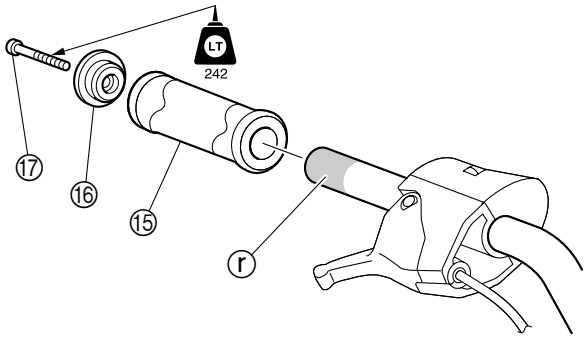

Grip end bolt ⑰: 1 N·m (0.1 kgf·m, 0.7 ft·lb)

Steering pad and handlebar cover installation

NOTICE

After installing the handlebar upper cover, make sure that the throttle cable is not pulled when the handlebar is turned to right and left.

1. Install the lower handlebar cover ①, and then tighten the screws ② to the specified torque.

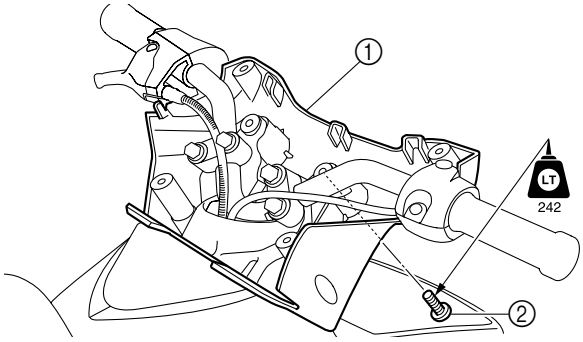

Lower handlebar cover screw ②: 4 N·m (0.4 kgf·m, 3.0 ft·lb)

2. Push the steering pad ③ into the upper handlebar cover ④ until it is installed securely.

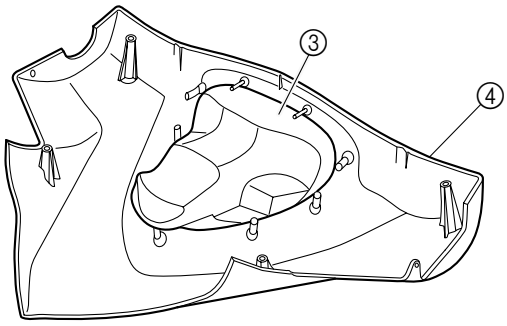

TIP:
If the steering pad ③ is not installed securely, the upper handlebar cover ④ cannot be installed properly onto the lower handlebar cover.

3. Install the upper handlebar cover ④, and then tighten the screws ⑤ and ⑥ to the specified torque.

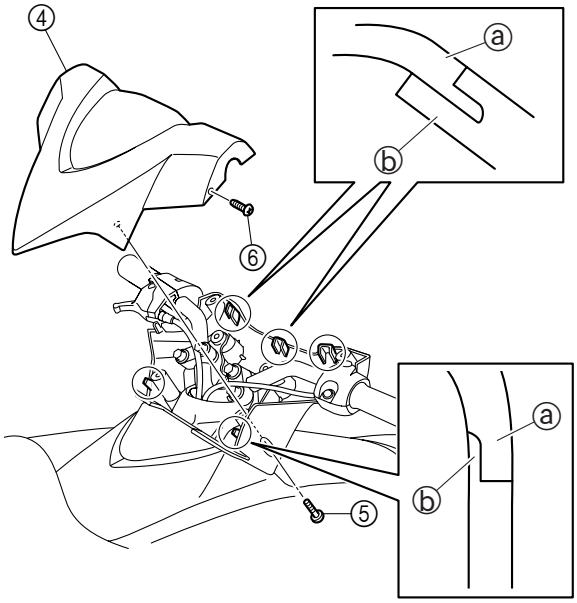

Upper handlebar cover screw (ø5 × 16 mm) ⑤: Upper handlebar cover screw (ø4 × 10 mm) ⑥: 1 N·m (0.1 kgf·m, 0.7 ft·lb)

TIP:
Align the portions ⓐ on the upper handlebar cover with the portions ⓑ on the lower handlebar cover.

Front hood

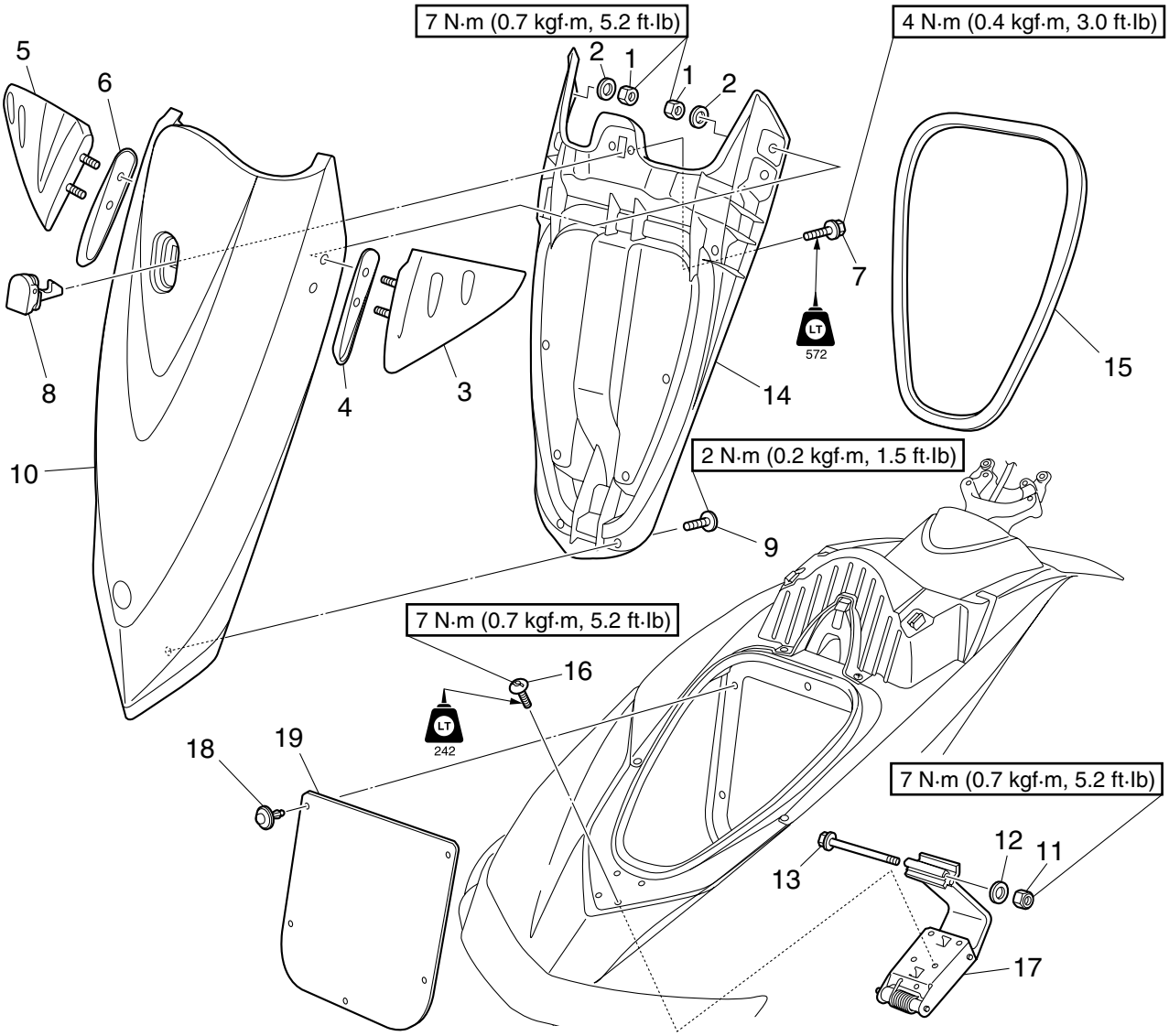

No.	Part name	Q'ty	Remarks
1	Nut	4	
2	Washer	4	
3	Left mirror	1	
4	Left mirror spacer	1	
5	Right mirror	1	
6	Right mirror spacer	1	
7	Bolt	2	M5 × 20 mm
8	Hood lock assy.	1	
9	Screw	8	ø5 × 15 mm
10	Front hood	1	
11	Nut	2	
12	Washer	2	
13	Bolt	2	M6 × 95 mm
14	Ventilator cover	1	
15	Packing	1	**Not reusable**
16	Bolt	4	M6 × 18 mm

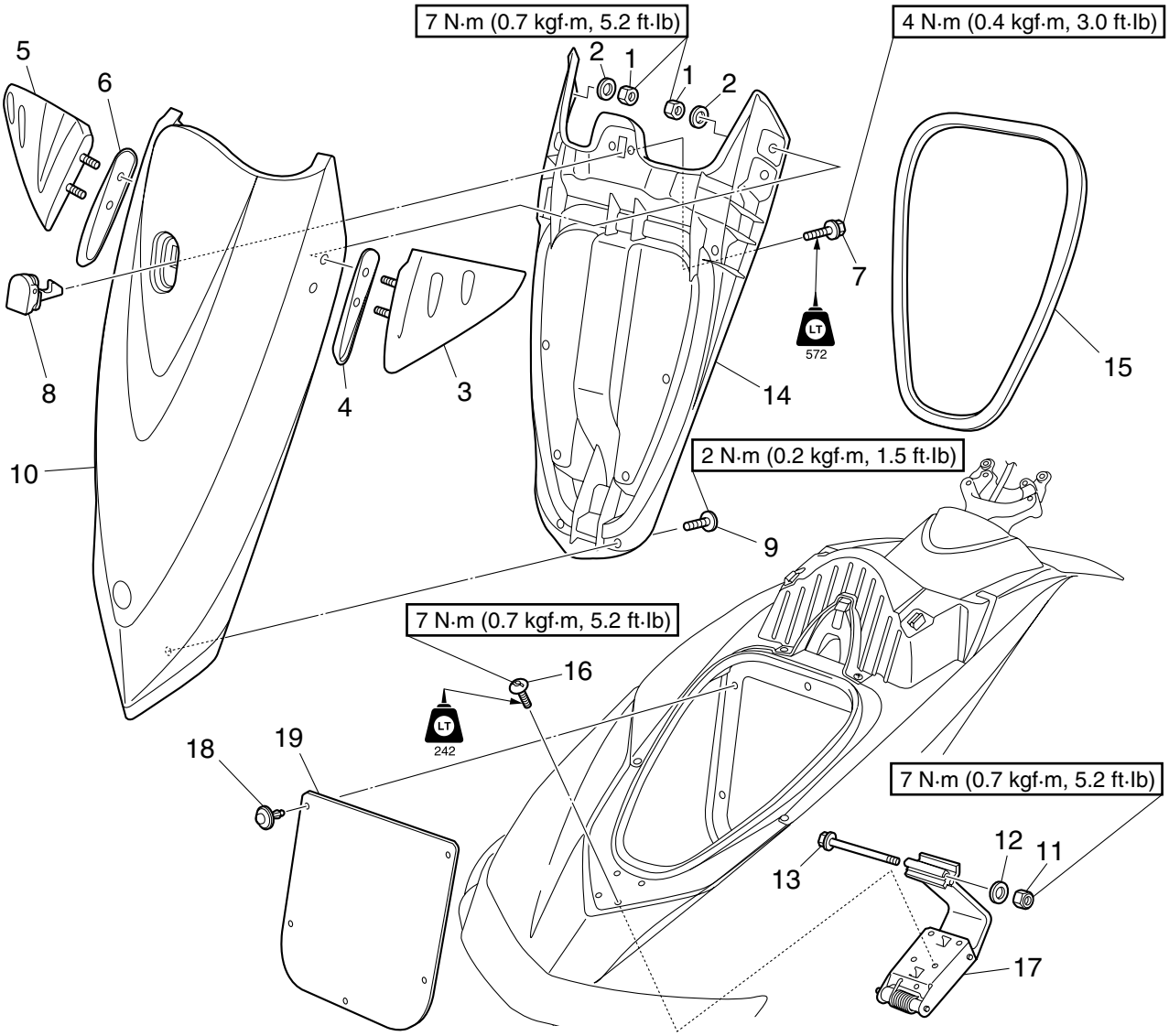

No.	Part name	Q'ty	Remarks
17	Hinge assy.	1	
18	Rivet	5	
19	Service lid	1	

Service lid installation

1. Install the service lid ①, and then insert a rivet completely in the holes in both the service lid ① and inner hull ②.

2. Push in the rivet pin ③ until it clicks and is flush with the top of the rivet.

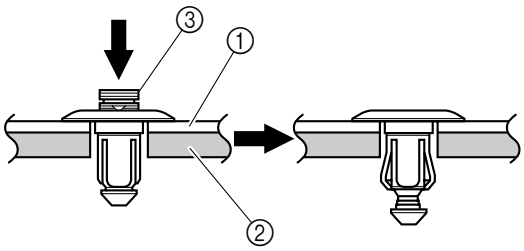

3. When removing a rivet, push the rivet pin ③ in until it clicks and is below the top of the rivet.

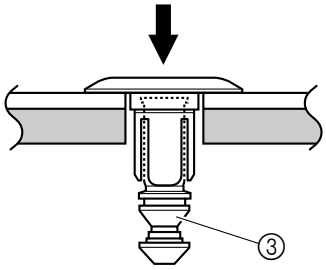

4. When reinstalling a rivet, hold the rivet flange ⓐ with both hands and push the rivet pin perpendicularly against a hard flat surface until the pin protrudes from the top of the rivet.

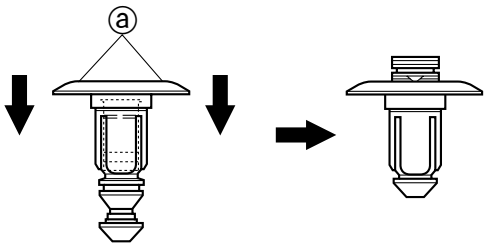

Hinge assy. check

1. Fully open the front hood and check that it remains in the open position. If the front hood cannot remain in the open position, replace the hinge assy.

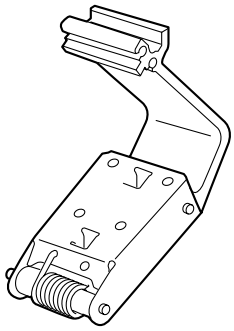

Hood lock check

1. Fully close the front hood and check that it latches securely. If the front hood cannot latch securely, check that the hood lock is installed properly.

2. Check the hood lock. Replace if cracked or damaged.

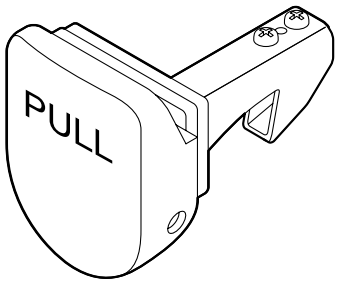

Multifunction meter and engine hatch cover

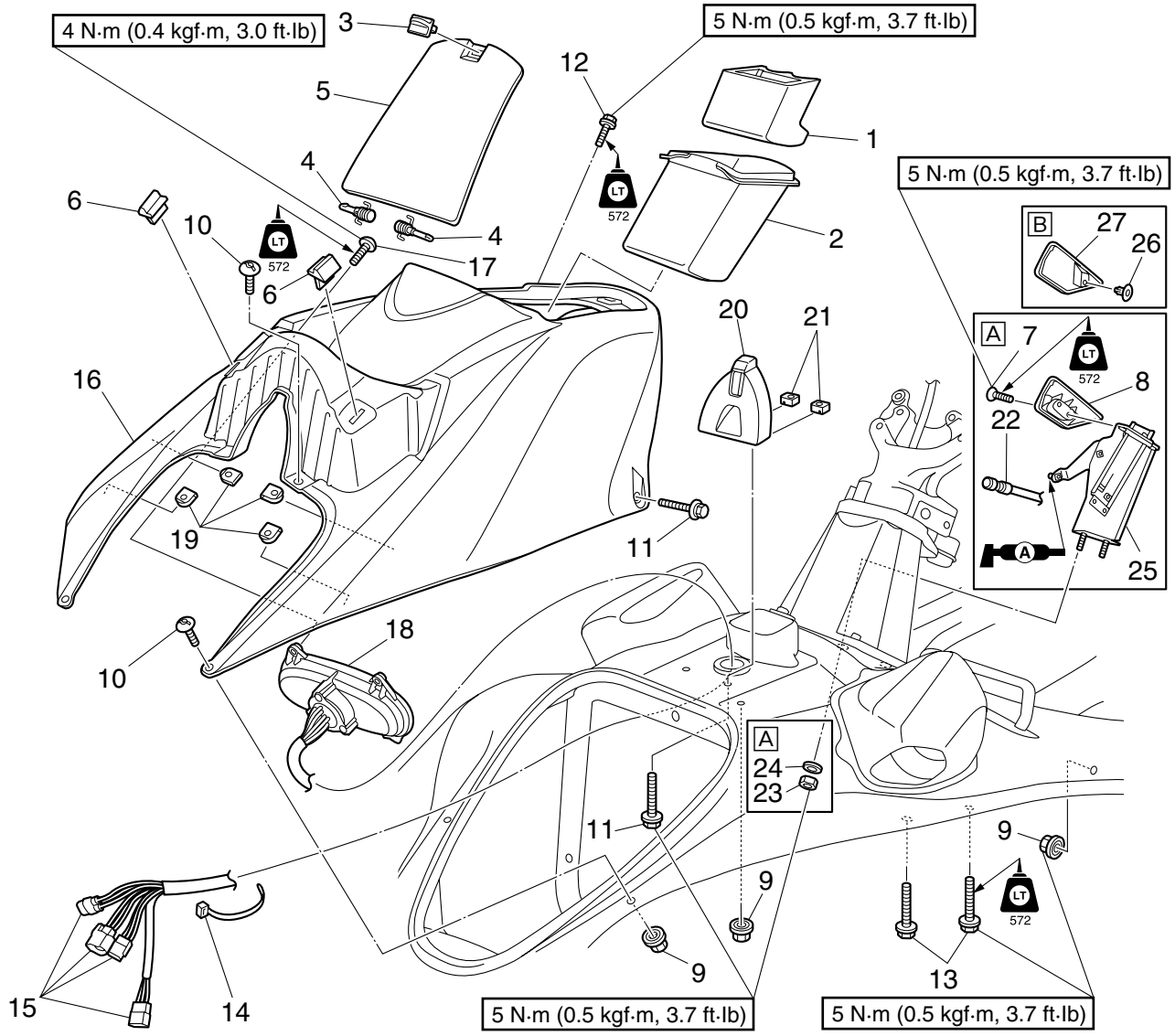

No.	Part name	Q'ty	Remarks
	Seat assy.		See "Seat and handgrip" (8-20).
1	Beverage holder	1	VX Cruiser and VX Deluxe
2	Glove box	1	
3	Lock	1	
4	Hinge pin	2	
5	Center console box lid	1	
6	Damper	2	
7	Bolt	2	A VX Cruiser and VX Deluxe, M6 × 10 mm
8	Grip	1	A VX Cruiser and VX Deluxe
9	Nut	6	
10	Bolt	4	M6 × 18 mm
11	Bolt	4	M6 × 29 mm
12	Bolt	2	VX Cruiser and VX Deluxe, M6 × 18 mm
13	Bolt	4	M6 × 29 mm
14	Plastic tie	1	
15	Multifunction meter coupler	4	

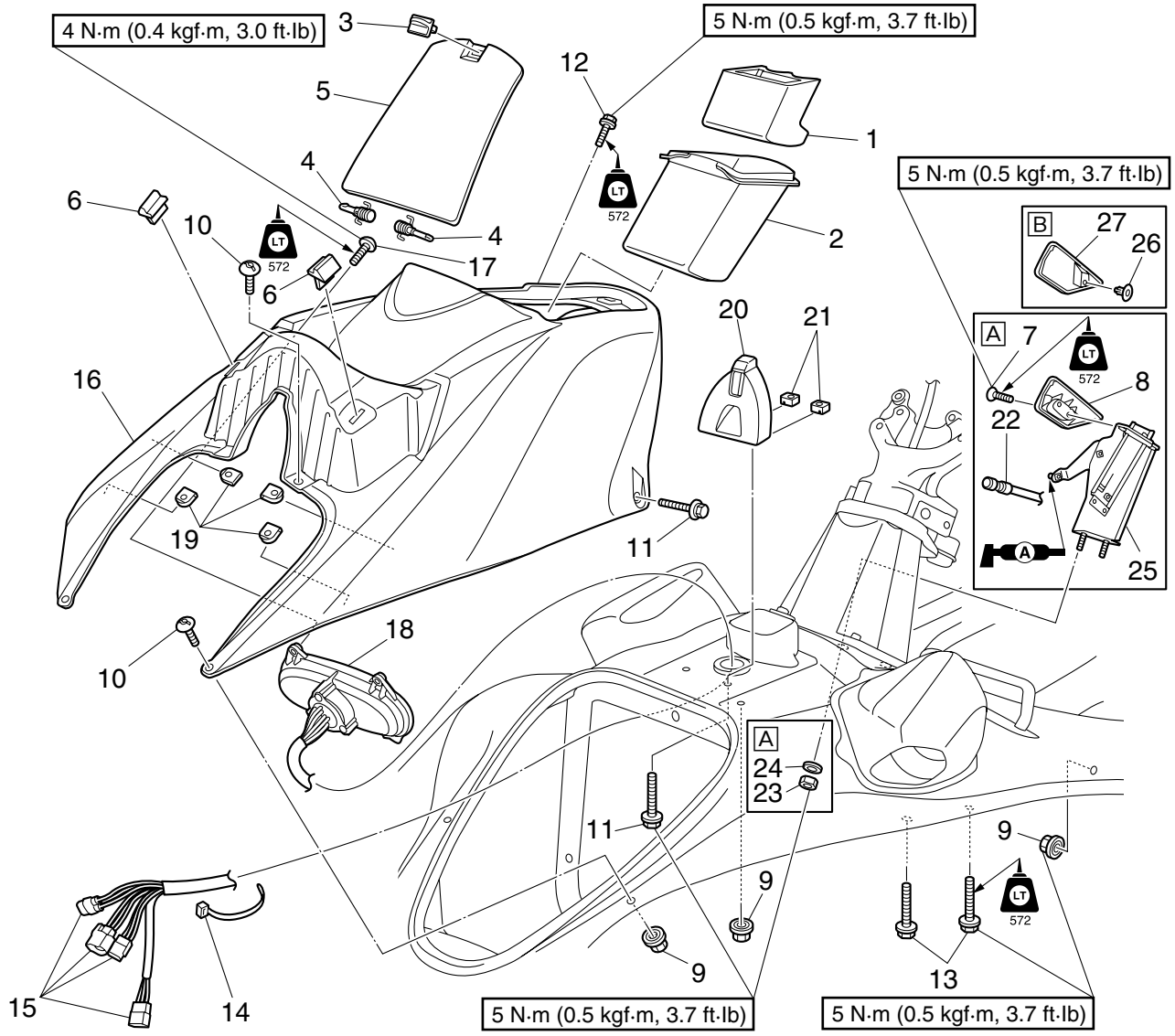

No.	Part name	Q'ty	Remarks
16	Engine hatch cover	1	
17	Screw	4	ø5 × 15 mm
18	Multifunction meter	1	
19	Spring nut	4	
20	Lid lock hook	1	
21	Nut	2	
22	Shift cable joint	1	A VX Cruiser and VX Deluxe
23	Nut	2	A VX Cruiser and VX Deluxe
24	Washer	2	A VX Cruiser and VX Deluxe
25	Shift lever assy.	1	A VX Cruiser and VX Deluxe
26	Revet	1	B VX Sport
27	Plug	1	B VX Sport

Steering master assy.

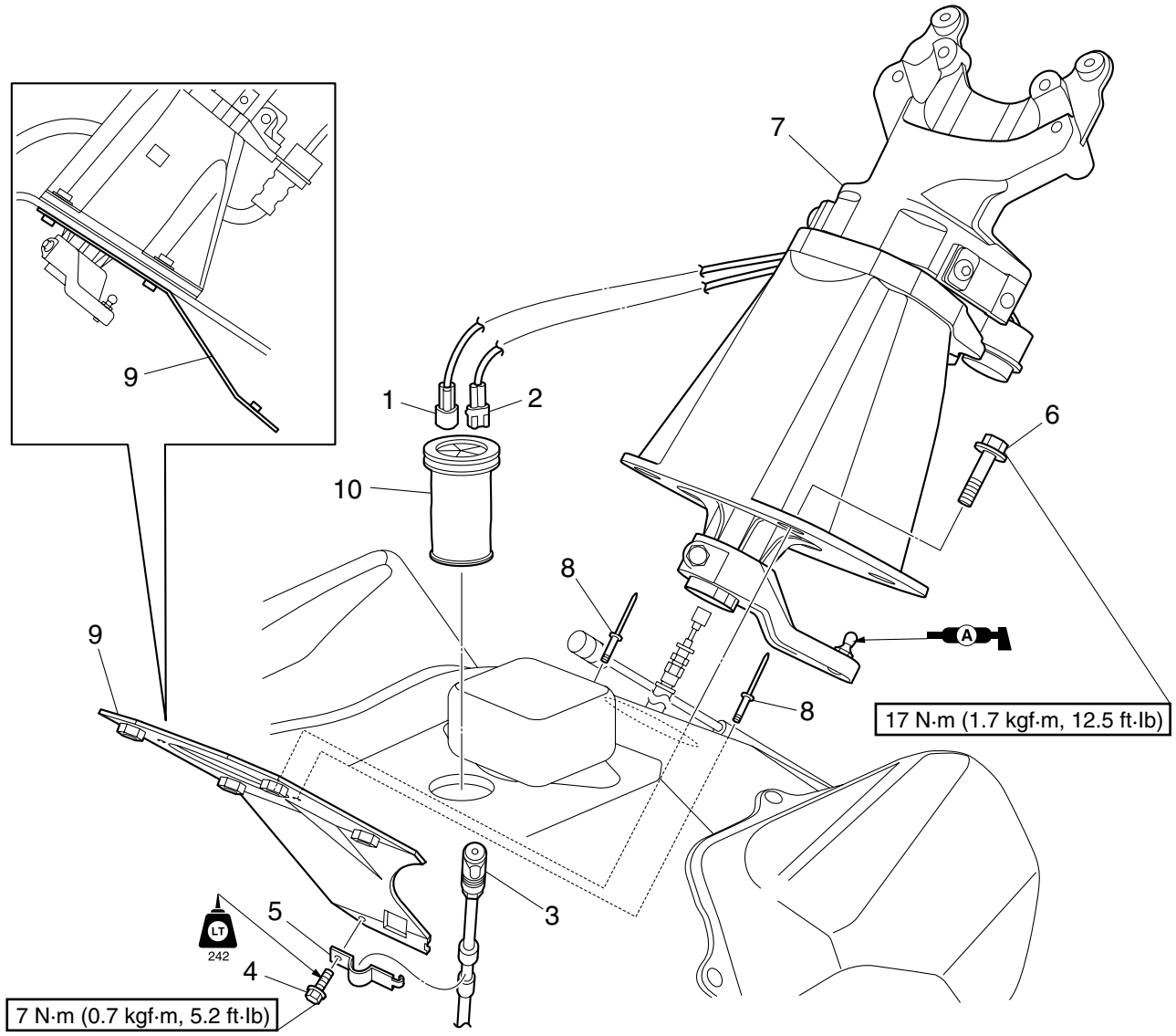

No.	Part name	Q'ty	Remarks
1	Steering sensor coupler	1	
2	Buzzer coupler	1	
3	Steering cable joint	1	
4	Bolt	1	M6 × 18 mm
5	Cable stopper	1	
6	Bolt	4	M8 × 30 mm
7	Steering master assy.	1	
8	Rivet	2	**Not reusable**
9	Cable stopper bracket	1	
10	Grommet	1	

Steering master

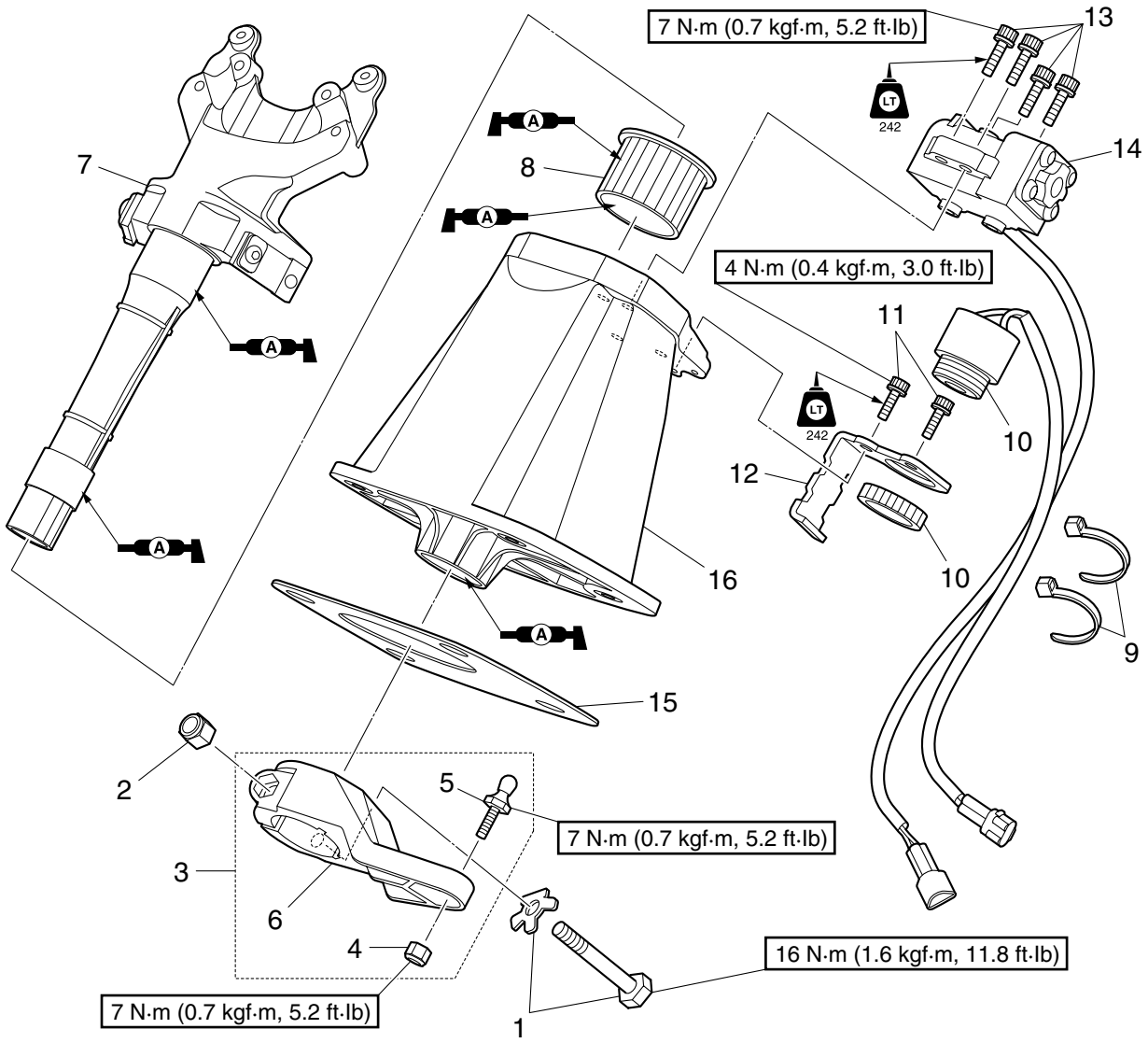

No.	Part name	Q'ty	Remarks
1	Bolt/plate	1/1	M8 × 50 mm
2	Nut	1	
3	Steering arm assy.	1	
4	Nut	1	
5	Ball joint	1	
6	Arm	1	
7	Steering shaft assy.	1	
8	Bushing	1	
9	Band	2	**Not reusable**
10	Buzzer	1	
11	Bolt	2	M5 × 16 mm
12	Bracket	1	
13	Bolt	4	M6 × 25 mm
14	Steering sensor	1	
15	Packing	1	**Not reusable**
16	Housing assy.	1	

Shift lever assy. check

1. Check the shift lever assy. Replace if cracked or damaged. ***NOTICE:*** **Do not disassemble the shift lever assy.**

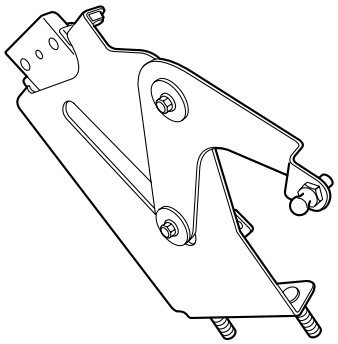

Bushing check

1. Check the bushing. Replace if cracked, damaged, or worn.

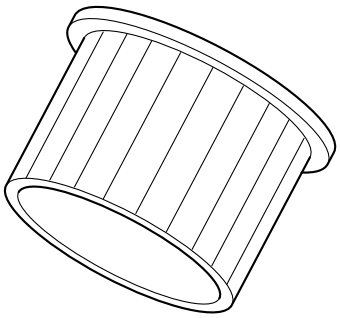

Steering shaft check

1. Check the steering shaft. Replace if cracked or damaged. ***NOTICE:*** **Do not disassemble the board spring ⓐ, otherwise the OTS will not function properly.**

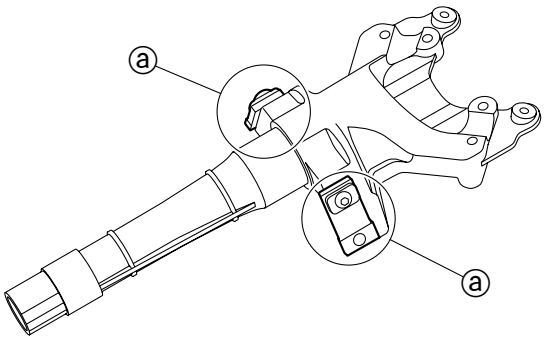

Steering arm assy. installation

1. Install the steering arm assy. ①, nut ② and plate ③, and then tighten the bolt ④ to the specified torque.

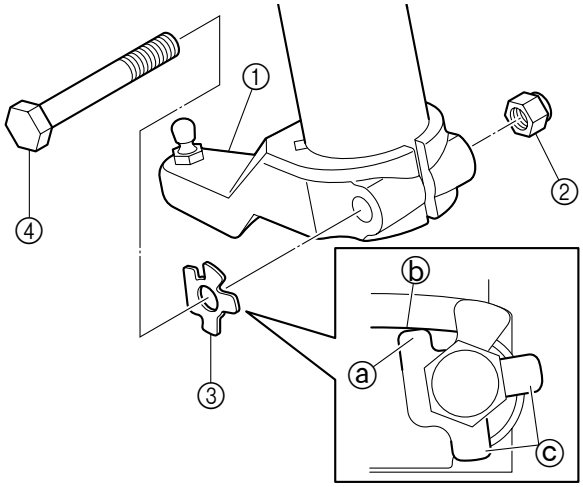

Steering arm assy. bolt ④: 16 N·m (1.6 kgf·m, 11.8 ft·lb)

TIP:

- Align the projection on the steering shaft assy. with the slot on the arm.
- Align the tab ⓐ on the plate ③ with the portion ⓑ on the steering arm assy. ①.
- Bend a tab ⓒ along a flat side of the bolt.

Steering cable and speed sensor lead

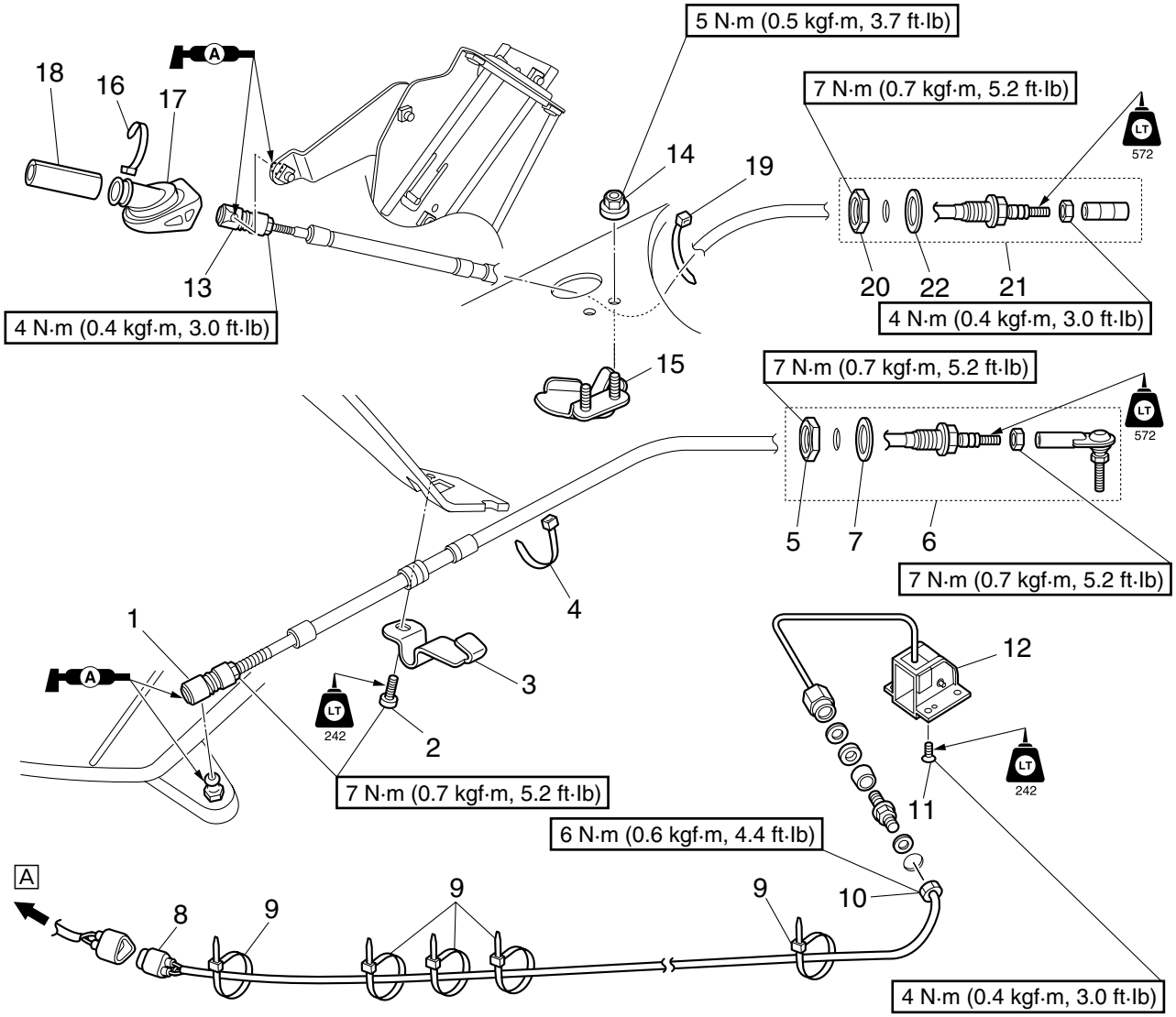

No.	Part name	Q'ty	Remarks
	Service lid		See "Front hood" (8-8).
	Seat assy.		See "Seat and handgrip" (8-20).
	Ride plate/rubber plate		See "Intake grate and ride plate" (6-1).
1	Steering cable joint	1	
2	Bolt	1	M6 × 18 mm
3	Steering cable stopper	1	
4	Plastic tie	1	
5	Nut	1	
6	Steering cable	1	
7	Packing	1	**Not reusable**
8	Speed sensor coupler	1	
9	Plastic tie	5	
10	Nut	1	
11	Screw	4	ø5 × 12 mm
12	Speed sensor	1	A To multifunction meter
13	Shift cable joint	1	VX Cruiser and VX Deluxe

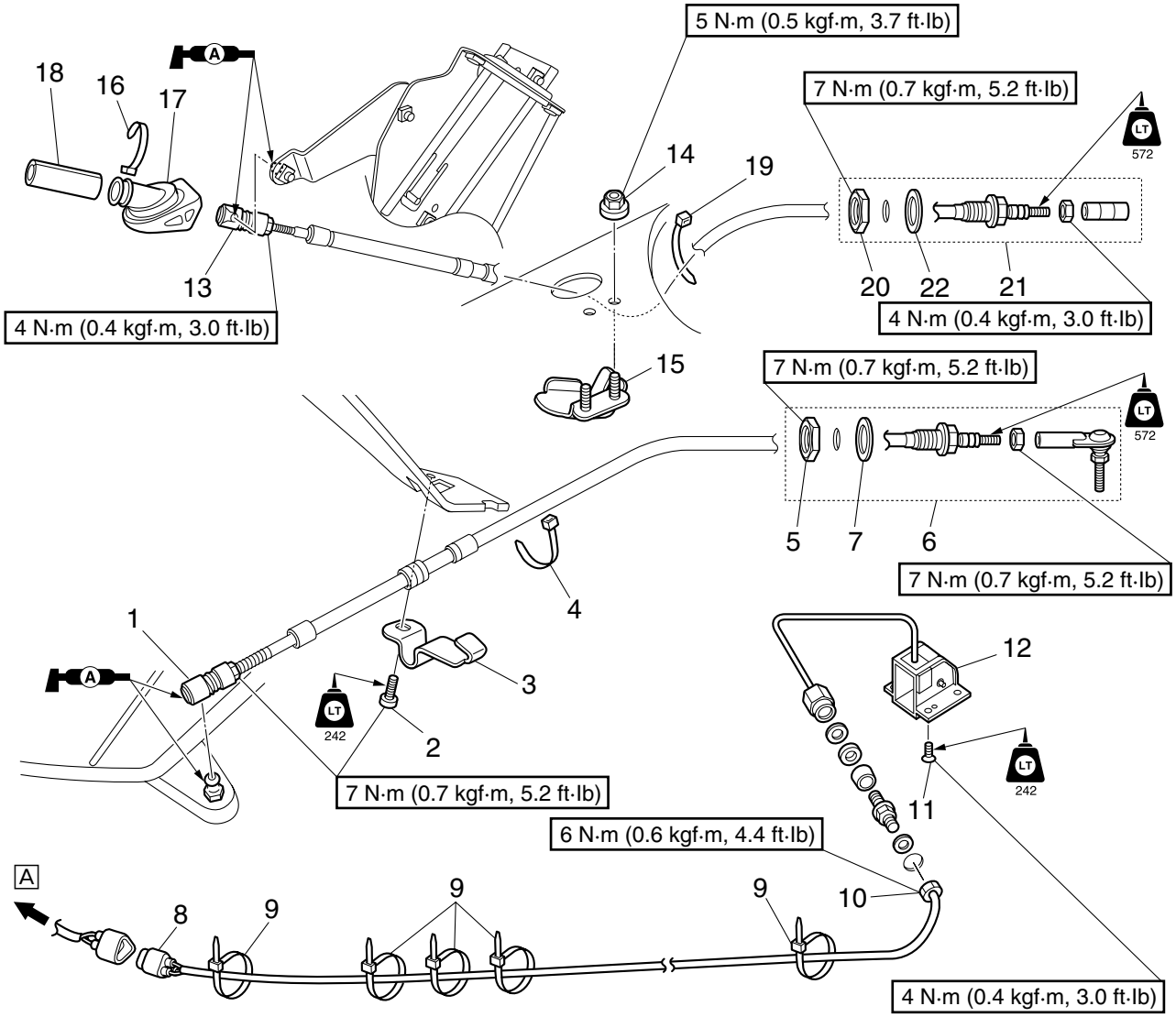

No.	Part name	Q'ty	Remarks
14	Nut	2	VX Cruiser and VX Deluxe
15	Shift cable bracket	1	VX Cruiser and VX Deluxe
16	Band	1	**Not reusable** VX Cruiser and VX Deluxe
17	Grommet	1	VX Cruiser and VX Deluxe
18	Packing	1	VX Cruiser and VX Deluxe
19	Plastic tie	1	VX Cruiser and VX Deluxe
20	Nut	1	VX Cruiser and VX Deluxe
21	Shift cable	1	VX Cruiser and VX Deluxe
22	Packing	1	**Not reusable** VX Cruiser and VX Deluxe

Steering cable installation (steering master end)

⚠ WARNING

If a cable becomes damaged, replace it. Never attempt to repair damaged cable.

1. Install the steering cable ① and steering cable stopper ②, and then tighten the bolt ③ to the specified torque.

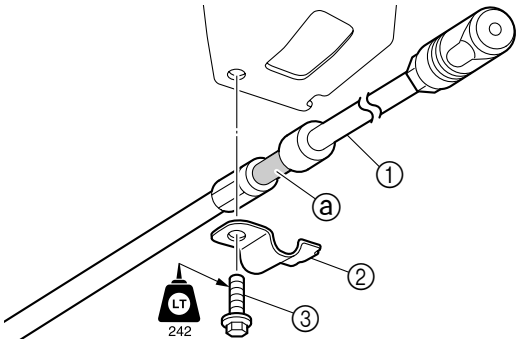

Steering cable stopper bolt ③: 7 N·m (0.7 kgf·m, 5.2 ft·lb)

TIP:

Install the steering cable stopper ② into the groove ⓐ in the outer cable.

2. Connect the steering cable joint ④ to the ball joint ⑤.

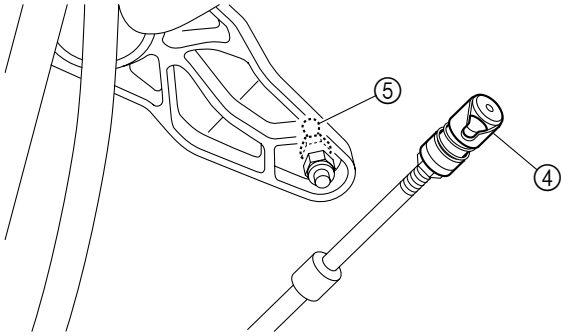

3. Adjust the steering cable. See “Jet thrust nozzle steering angle check” (3-12).

Steering cable installation (jet pump end)

1. Adjust the steering cable set length ⓐ, and then tighten the locknut ① to the specified torque. (jet pump end)

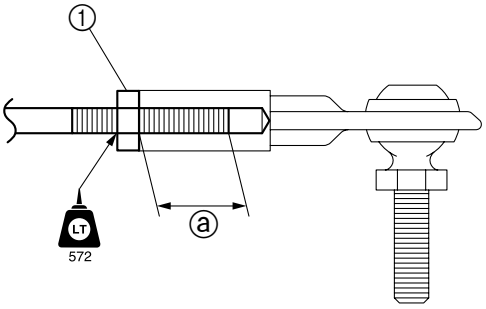

Steering cable set length ⓐ (jet pump end): 14.5 ± 1 mm (0.57 ± 0.04 in)

Steering cable locknut (jet pump end) ①: 7 N·m (0.7 kgf·m, 5.2 ft·lb)

2. Install the washer ② and steering cable joint ③, and then tighten the steering cable joint ③ to the specified torque.

3. Install the washer ④ and locknut ⑤, and then tighten the locknut ⑤ to the specified torque.

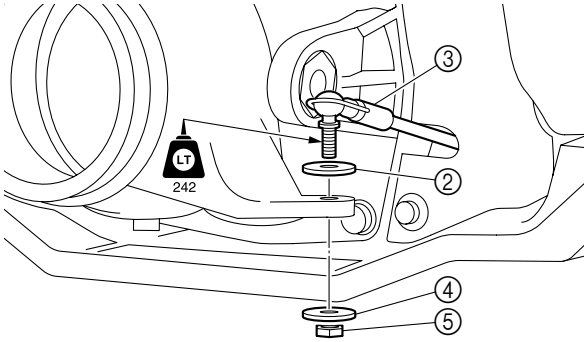

Steering cable joint ③: 7 N·m (0.7 kgf·m, 5.2 ft·lb) Locknut ⑤: 7 N·m (0.7 kgf·m, 5.2 ft·lb)

Shift cable installation (shift lever end) (VX Cruiser and VX Deluxe)

1. Install the packing ① and grommet ② onto the shift cable ③.

2. Install the shift cable holder ④ so that the slot ⓐ in the holder fits into the groove ⓑ in the outer cable.

3. Install a new band ⑤. ***NOTICE:*** **Do not reuse a band, always replace it with a new one.**

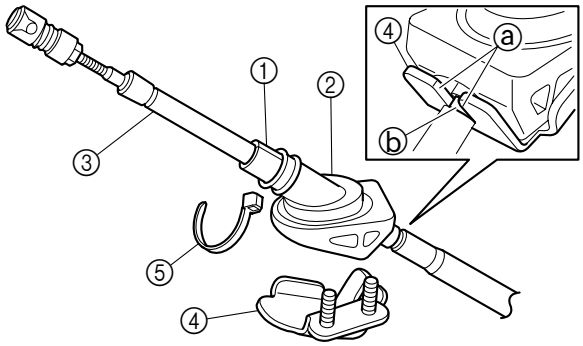

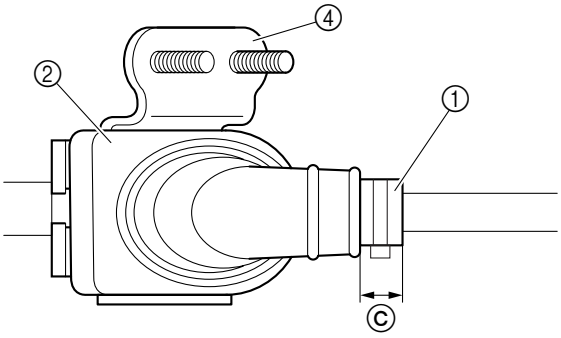

Installation distance ⓒ: 5–15 mm (0.20–0.59 in)

TIP:

Make sure that the edge of the packing ① is the specified distance ⓒ from the edge of the grommet ②.

4. Install the shift cable assy. ⑥, and then tighten the nuts ⑦ to the specified torque.

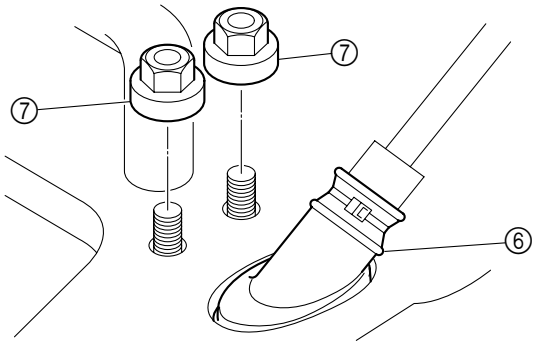

Shift cable bracket nut ⑦: 5 N·m (0.5 kgf·m, 3.7 ft·lb)

Seat and handgrip

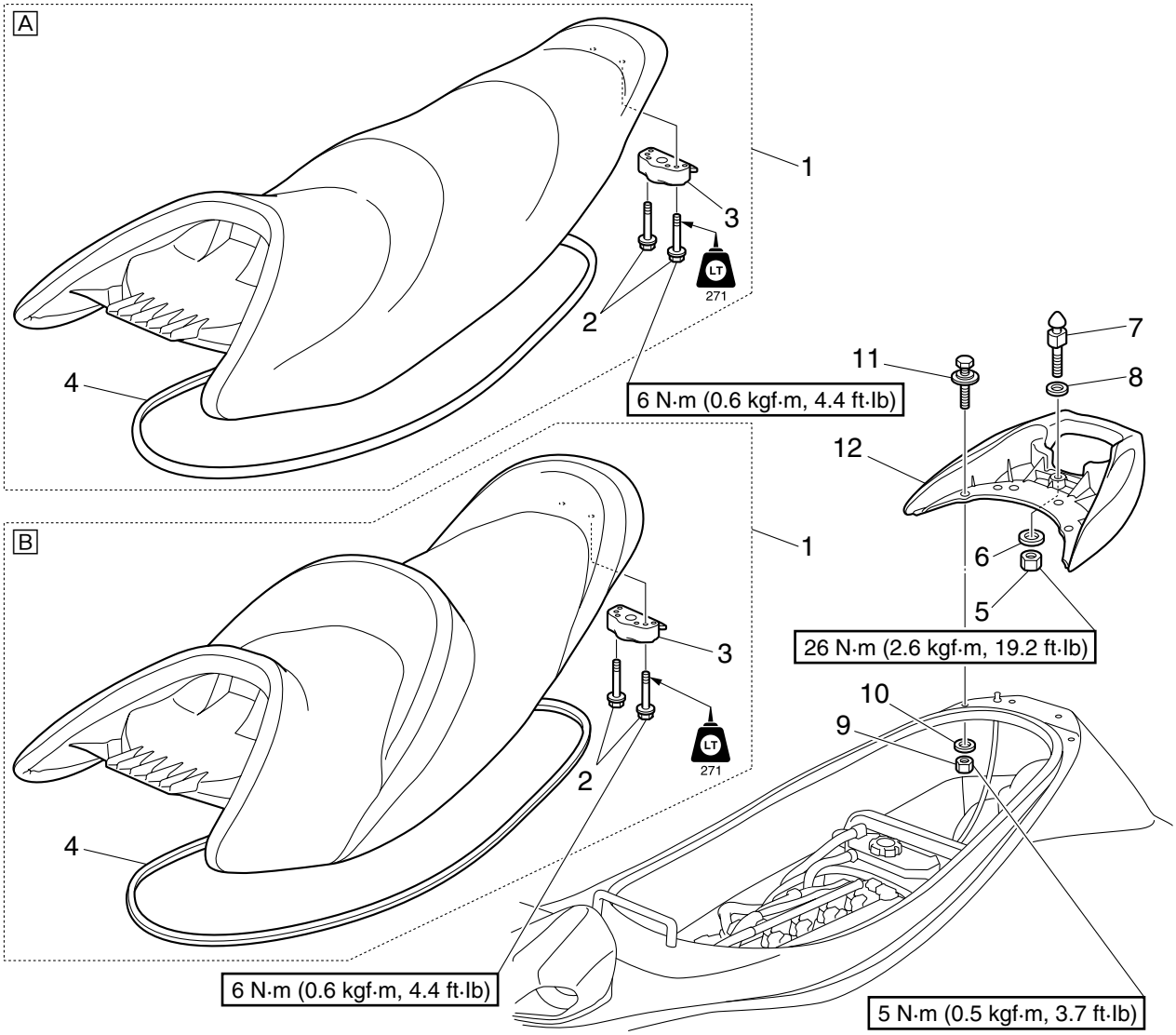

No.	Part name	Q'ty	Remarks
1	Seat assy.	1	A VX Sport and VX Deluxe B VX Cruiser
2	Bolt	2	M6 × 40 mm
3	Seat lock assy.	1	
4	Packing	1	**Not reusable**
5	Nut	1	
6	Washer	1	
7	Projection	1	
8	Washer	1	
9	Nut	4	
10	Washer	4	
11	Bolt	4	M8 × 30 mm
12	Handgrip	1	

Ventilation hose and water separator

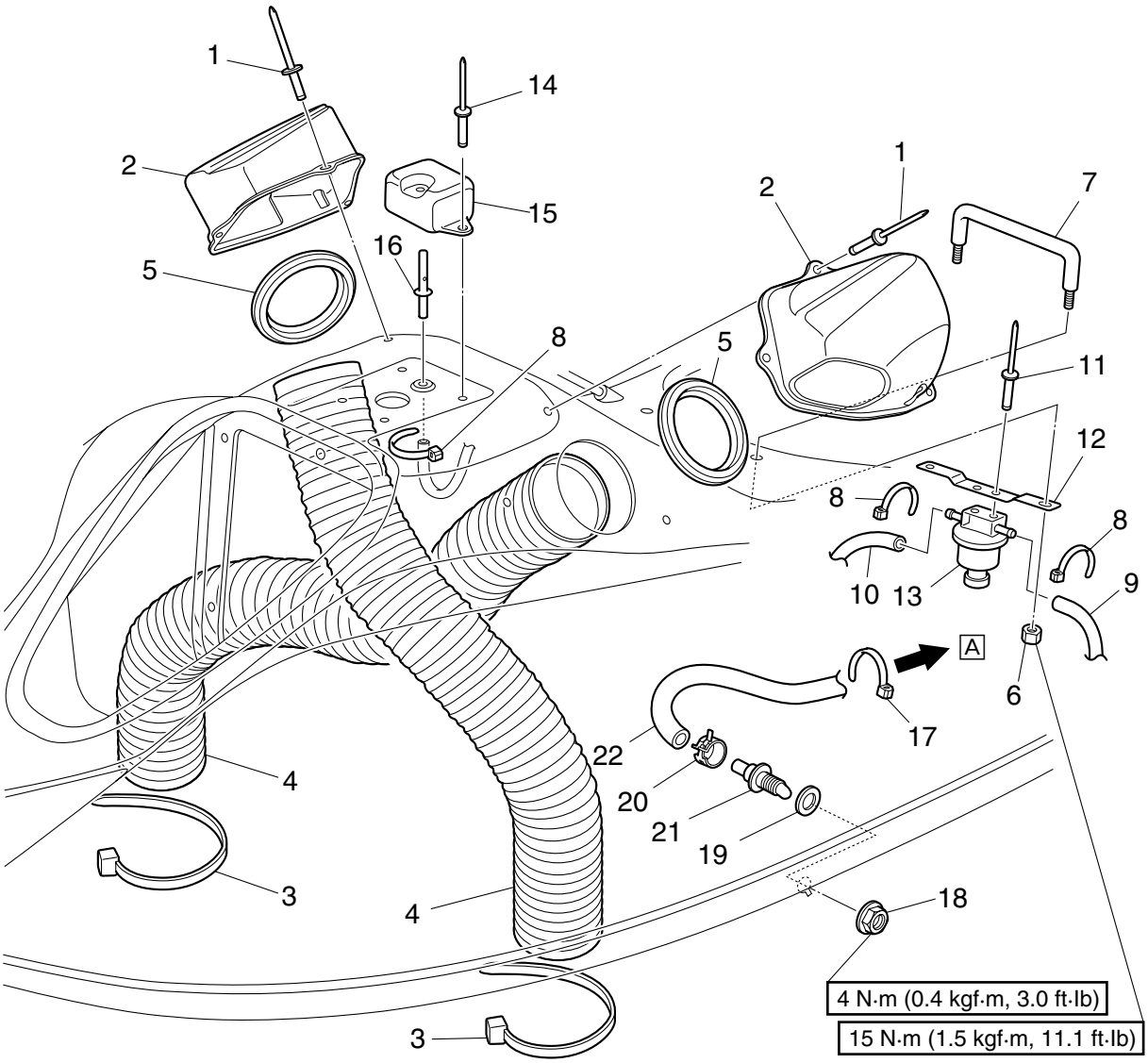

No.	Part name	Q'ty	Remarks
1	Rivet	6	Not reusable
2	Induction box	2	
3	Band	2	Not reusable
4	Ventilation hose	2	
5	Grommet	2	
6	Nut	2	
7	Seat holder	1	
8	Band	3	Not reusable
9	Fuel tank breather hose 1	1	
10	Fuel tank breather hose 2	1	
11	Rivet	2	Not reusable
12	Bracket	1	
13	Water separator	1	
14	Rivet	2	Not reusable
15	Ventilation socket	1	
16	Ventilation pipe	1	

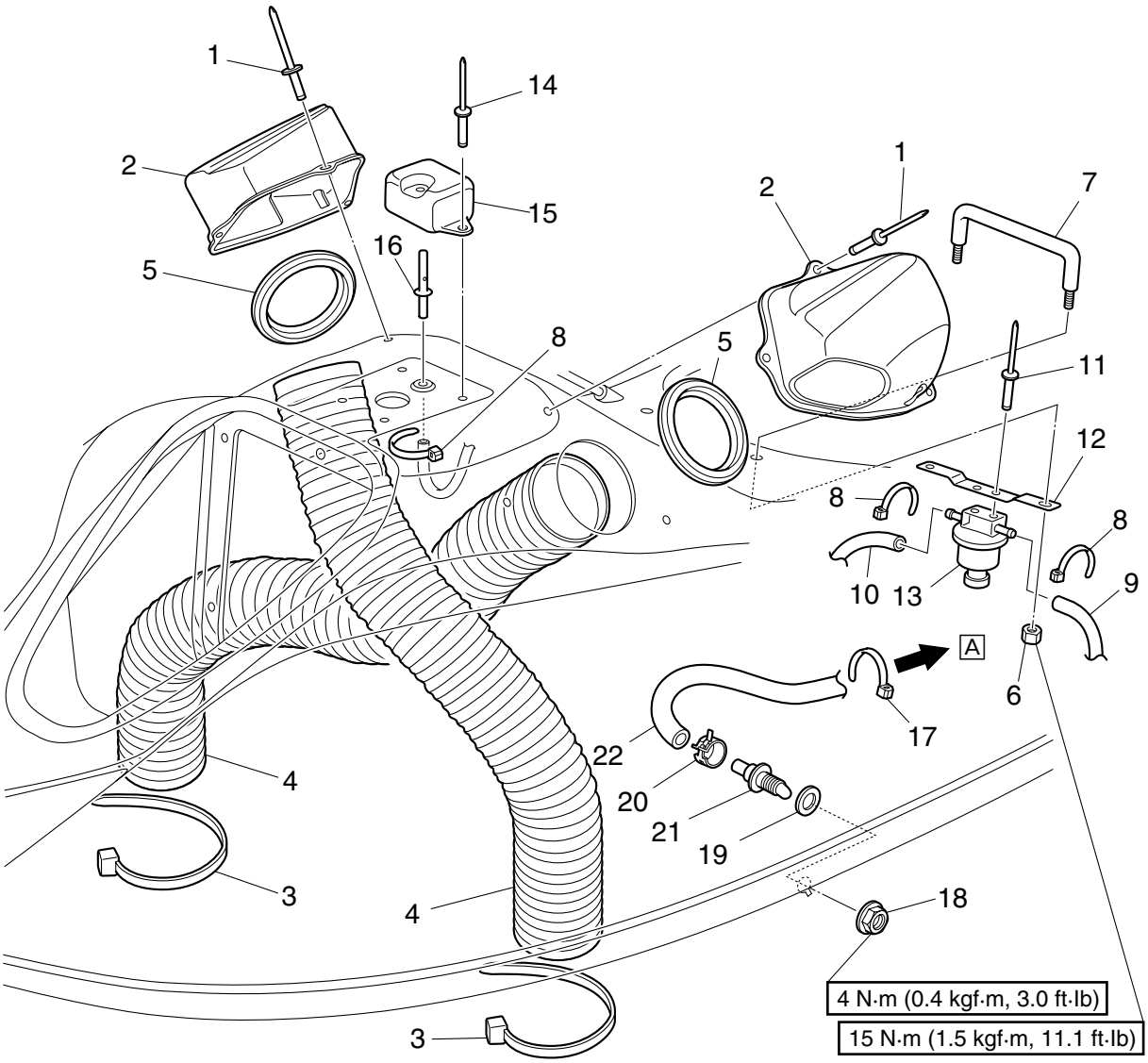

No.	Part name	Q'ty	Remarks
17	Plastic tie	1	
18	Nut	1	
19	Seal	1	**Not reusable**
20	Clamp	1	
21	Cooling water pilot outlet	1	
22	Cooling water hose	1	A To exhaust pipe 2

8

Seat lock check

1. Check the seat lock assy. ①. Replace if cracked, damaged, or worn.

2. Check the projection ②. Replace if damaged.

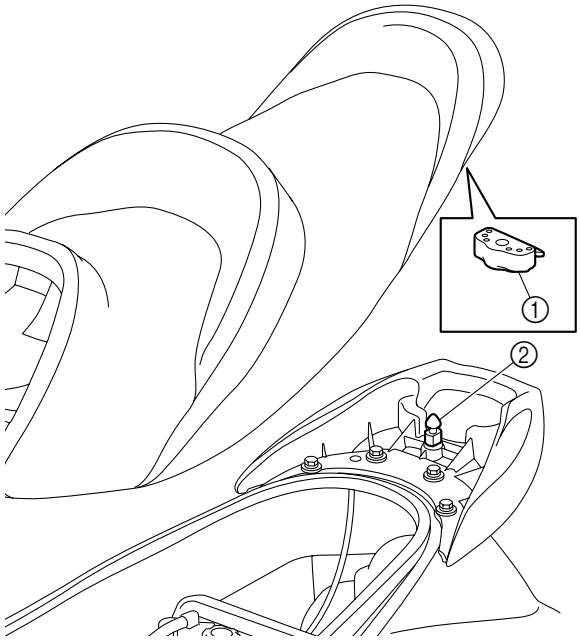

Water separator assy. removal

1. Remove the water separator assy. ① and seat holder ②.

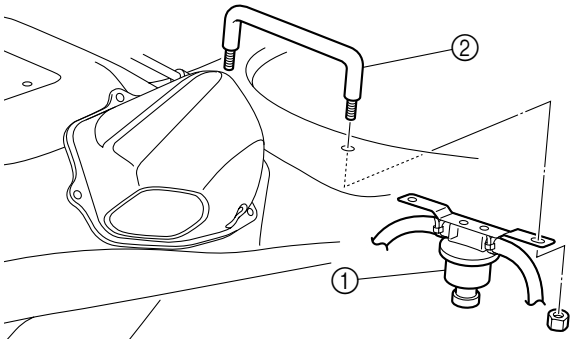

2. Make a mark ⓐ on the fuel tank breather hose 1 ③.

3. Disconnect fuel tank breather hose 1 ③ and fuel tank breather hose 2 ④.

4. Remove the bracket ⑤.

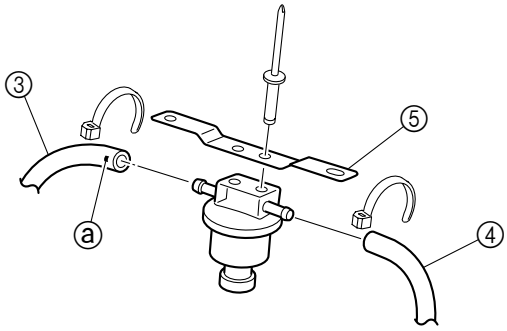

Water separator check

1. Check the water separator ①, O-ring ②, and drain plug ③. Replace if cracked or damaged.

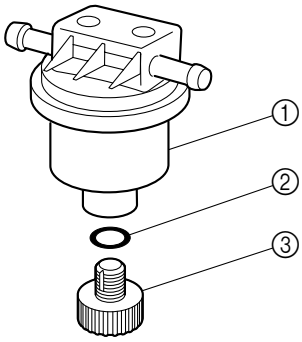

Water separator assy. installation

1. Install the bracket ① onto the water separator ②.

2. Connect fuel tank breather hose 1 ③ and fuel tank breather hose 2 ④ onto the water separator ②.

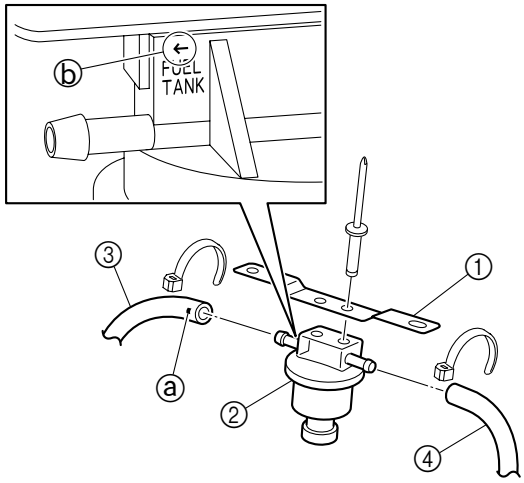

TIP:
Connect fuel tank breather hose 1 ③, which is identified by the mark ⓐ, to the water separator outlet with the arrow mark ⓑ.

3. Install the water separator ② and seat holder ⑤, and then tighten the nuts ⑥ to the specified torque.

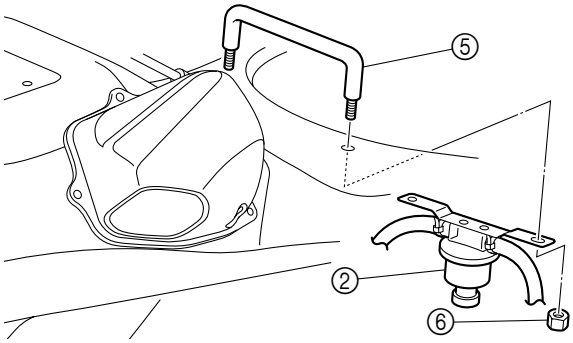

Seat holder nut ⑥: 15 N·m (1.5 kgf·m, 11.1 ft·lb)

Cooling water pilot outlet installation

NOTICE

Do not reuse a seal, always replace it with a new one.

1. Install a new seal ① and the cooling water pilot outlet ②, and then tighten the nut ③ to the specified torque.

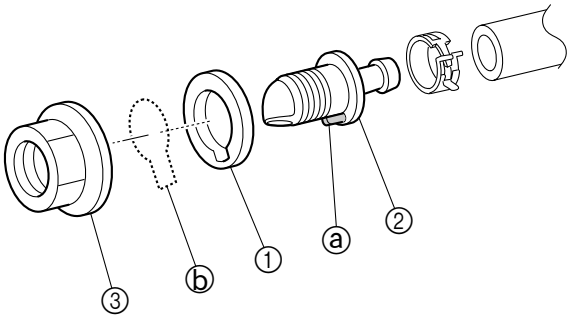

Cooling water pilot outlet nut ③: 4 N·m (0.4 kgf·m, 3.0 ft·lb)

TIP:
Align each projection ⓐ with the slit ⓑ.

Ventilation hose installation

1. Install the grommets ①.

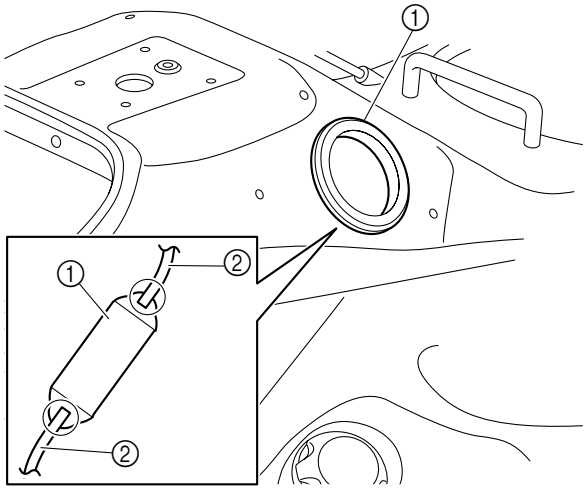

TIP:
Make sure that the grommet ① is properly seated in the hole in the inner hull ②.

2. Install the ventilation hoses ③.

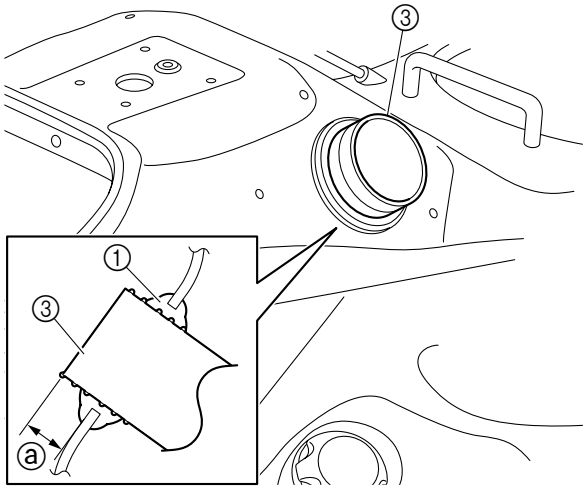

Installation distance ⓐ: 30–40 mm (1.18–1.57 in)

TIP:
- Make sure to route the ventilation hose (PORT) in front of the ventilation hose (STBD).
- Make sure that the end of the ventilation hose ③ is the specified distance ⓐ from the groove around the outside of the grommet ①.

3. Install the induction box ④.

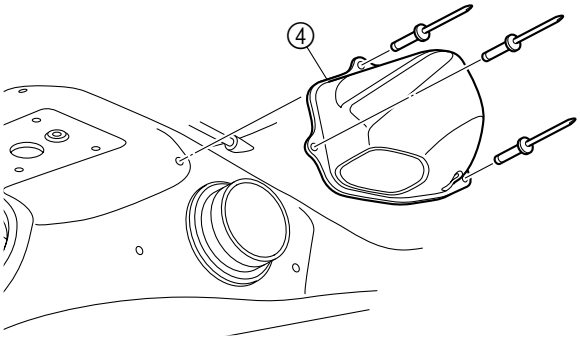
4

Exhaust system

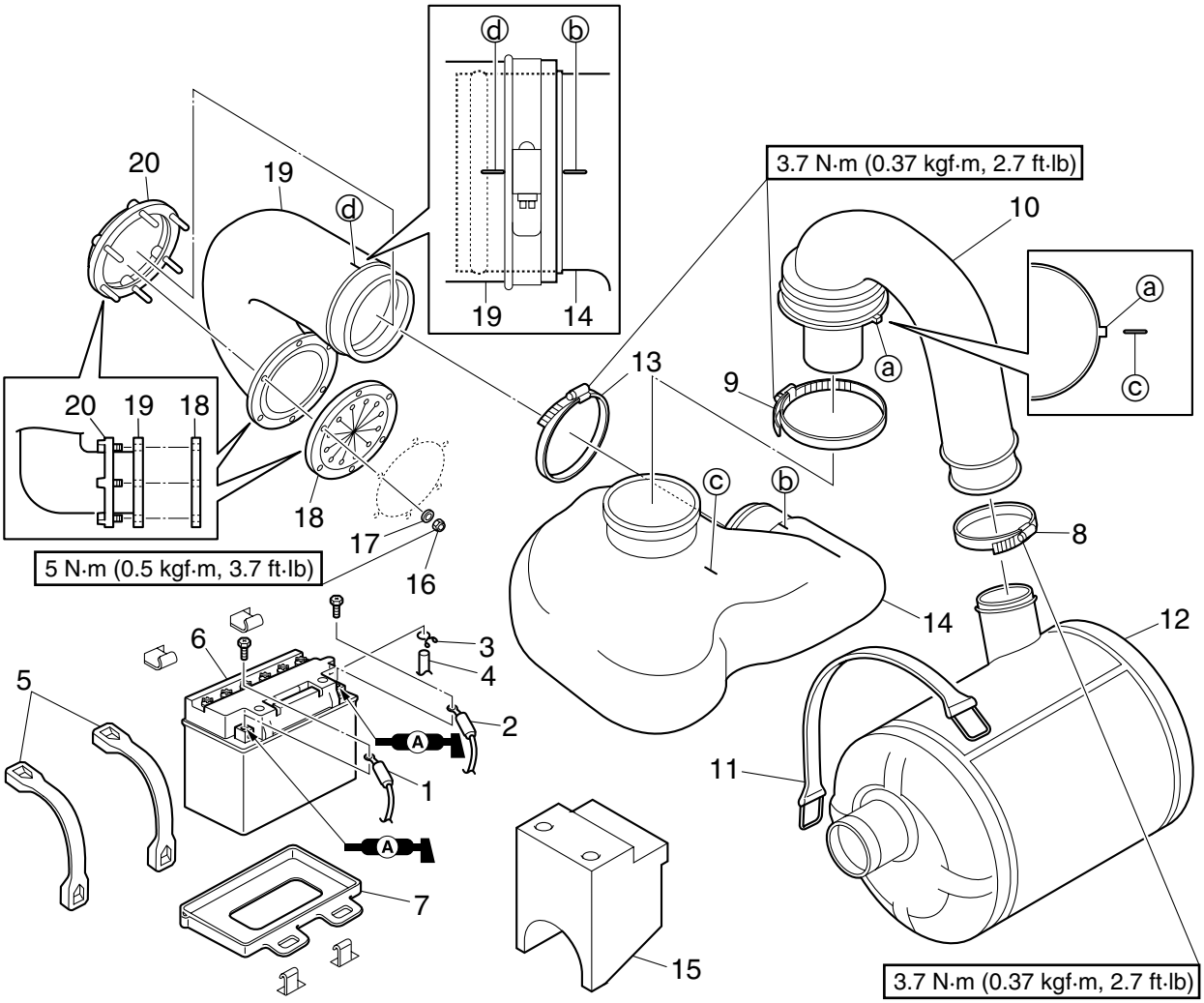

No.	Part name	Q'ty	Remarks
	Ride plate		See "Intake grate and ride plate" (6-1).
1	Negative battery cable	1	
2	Positive battery cable	1	
3	Clamp	1	
4	Battery breather hose	1	
5	Band	2	
6	Battery	1	
7	Battery case	1	
8	Clamp	1	
9	Clamp	1	
10	Rubber hose	1	ⓐ Projection
11	Band	1	
12	Water lock	1	
13	Clamp	1	
14	Water tank	1	ⓑ Alignment mark, ⓒ Alignment mark
15	Flotation	1	

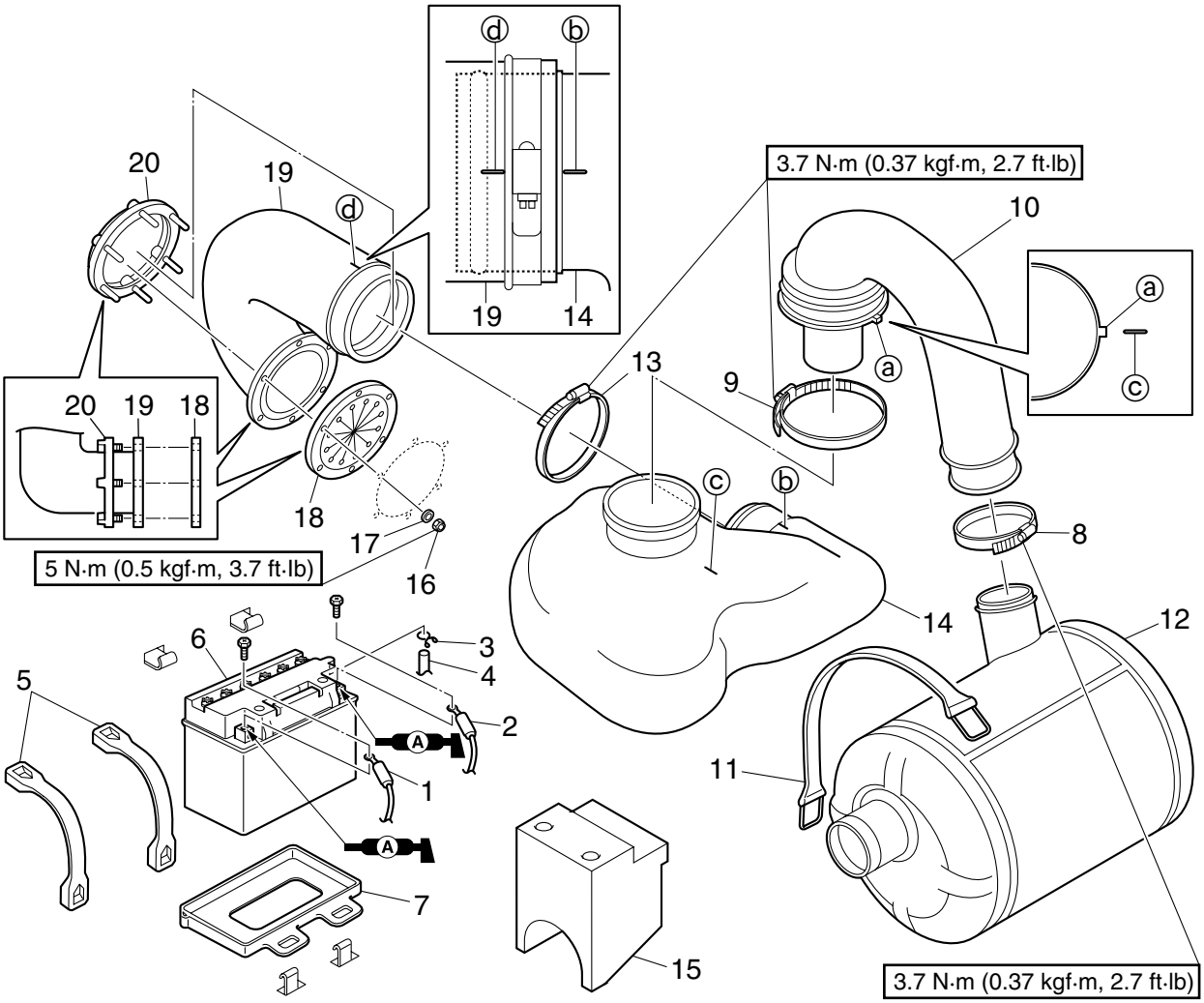

No.	Part name	Q'ty	Remarks
16	Nut	6	
17	Washer	6	
18	Exhaust valve	1	**Not reusable**
19	Rubber hose	1	ⓓ Alignment mark
20	Plate	1	

Exhaust system check

1. Check the rubber hoses. Replace if burned, cracked, or damaged.

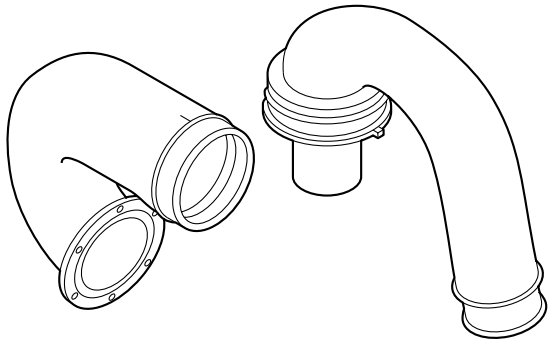

2. Check the water lock ① and water tank ②. Replace if cracked, damaged, or leaked.

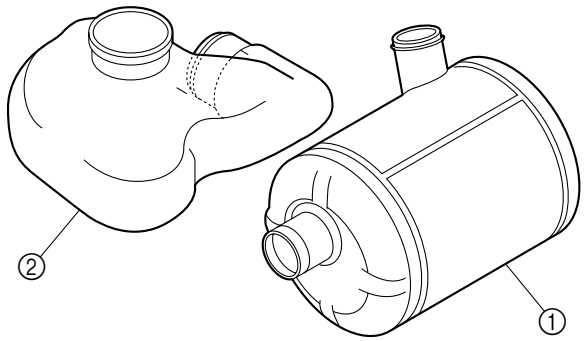

Exhaust system installation

1. Install the plate ① onto the rubber hose ②.

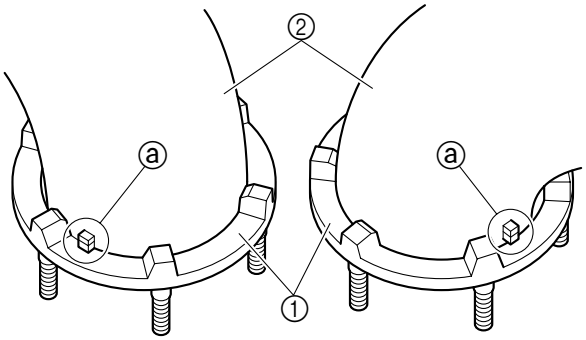

TIP:

Make sure to fit the projections ⓐ on the rubber hose ② with the grooves in the plate ①.

2. Install the rubber hose ② and a new exhaust valve ③, and then tighten the nuts ④ to the specified torque.

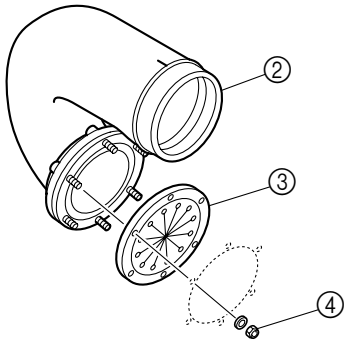

Rubber hose nut ④: 5 N·m (0.5 kgf·m, 3.7 ft·lb)

3. Install the water tank ⑤, and then tighten the clamp ⑥ to the specified torque.

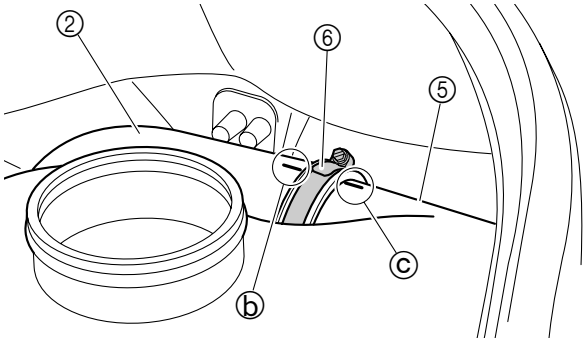

Rubber hose clamp ⑥: 3.7 N·m (0.37 kgf·m, 2.7 ft·lb)

TIP:

Align the alignment mark ⓑ on the rubber hose ② with the alignment mark ⓒ on the water tank ⑤.

4. Install the water lock and rubber hose ⑦, and then tighten the clamp ⑧ to the specified torque.

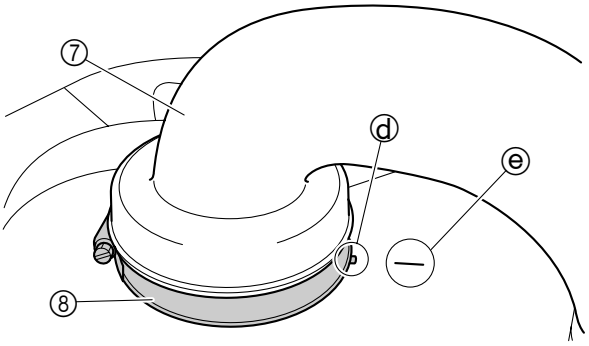

Rubber hose clamp ⑧: 3.7 N·m (0.37 kgf·m, 2.7 ft·lb)

TIP:
Align the projection ⓓ on the rubber hose ⑦ with the alignment mark ⓔ on the water tank.

5. Install the bands.

Deck and hull

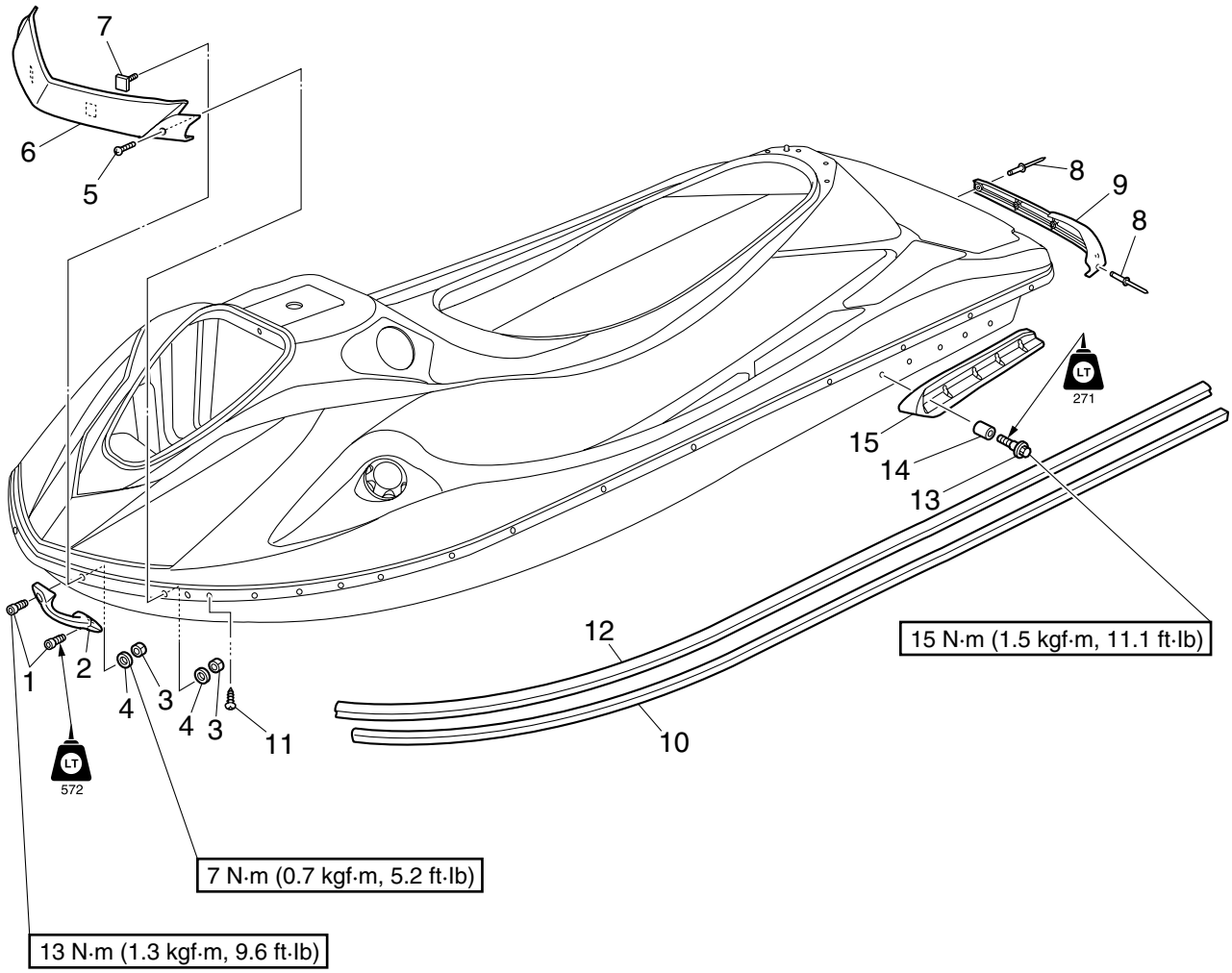

No.	Part name	Q'ty	Remarks
1	Bolt	2	M6 × 20 mm
2	Bow eye	1	
3	Nut	4	
4	Washer	4	
5	Bolt	2	M6 × 25 mm
6	Front protector	1	
7	Bolt	2	M6 × 25 mm
8	Rivet	9	**Not reusable**
9	Rear protector	2	
10	Inner gunwale	2	
11	Screw	30	ø5 × 12 mm
12	Side gunwale	2	
13	Bolt	10	M8 × 40 mm
14	Collar	10	
15	Sponson	2	

Rear section

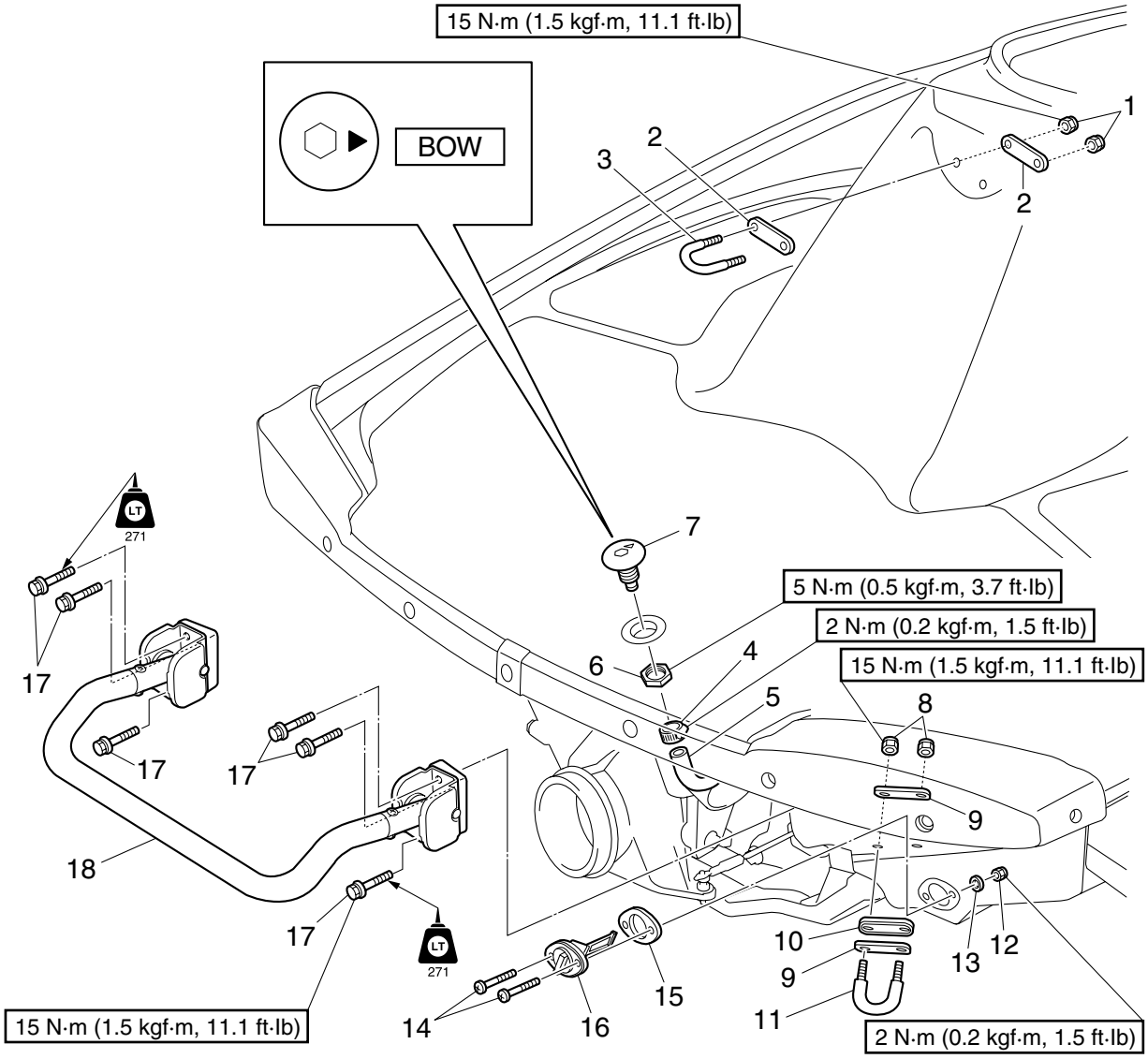

No.	Part name	Q'ty	Remarks
	Water lock		See "Exhaust system" (8-26).
1	Nut	2	
2	Plate	2	
3	Ski tow	1	
4	Clamp	1	
5	Spout hose	1	
6	Nut	1	
7	Spout	1	
8	Nut	4	
9	Plate	4	
10	Packing	2	**Not reusable**
11	Stern eye	2	
12	Nut	4	
13	Washer	4	
14	Screw	4	ø5 × 25 mm
15	Packing	2	**Not reusable**

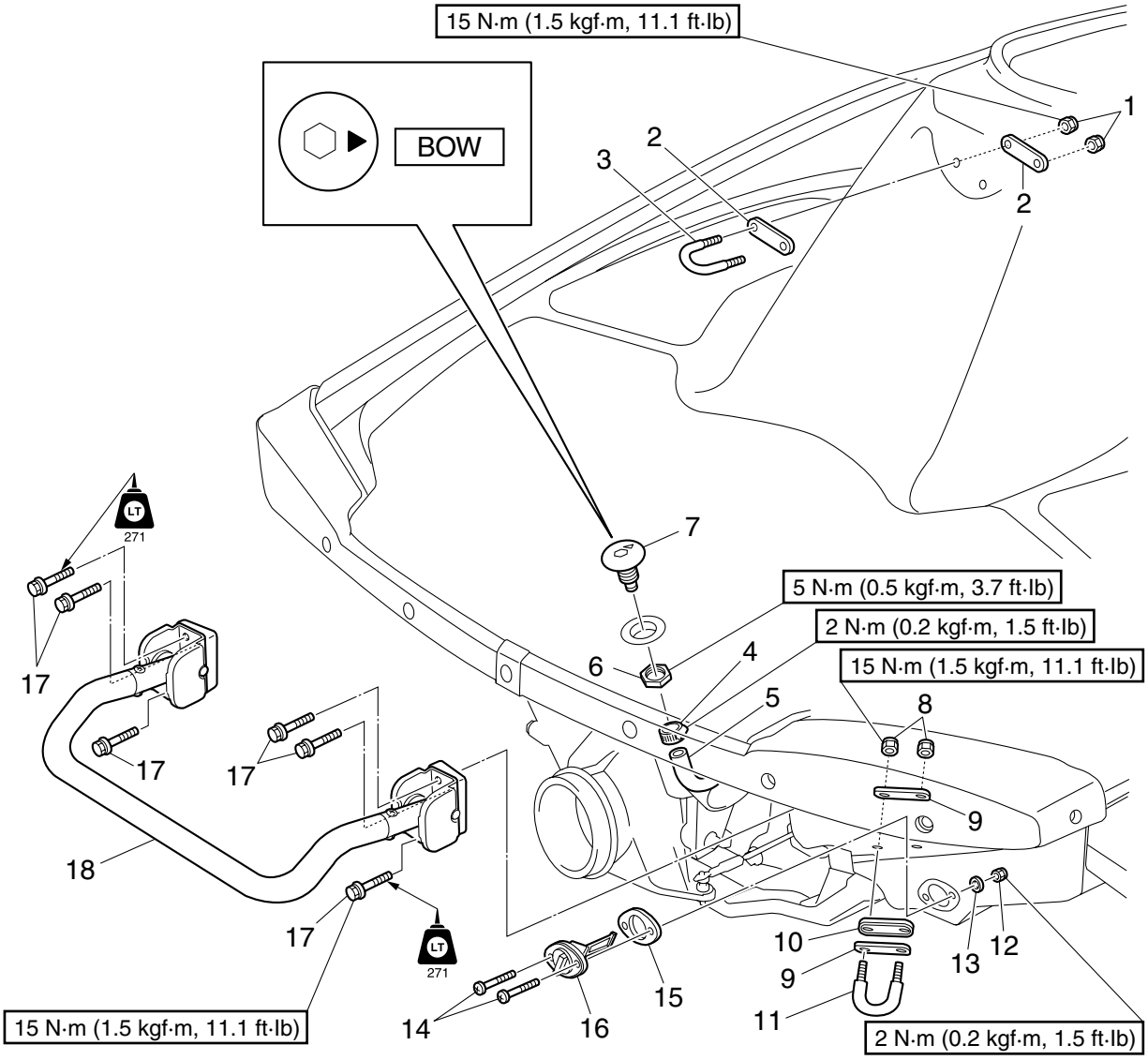

No.	Part name	Q'ty	Remarks
16	Drain plug	2	
17	Bolt	6	VX Cruiser, M8 × 46 mm
18	Reboarding step assy.	1	VX Cruiser

Drain plug check

1. Check the drain plug ① and O-ring ②. Replace if cracked or damaged.

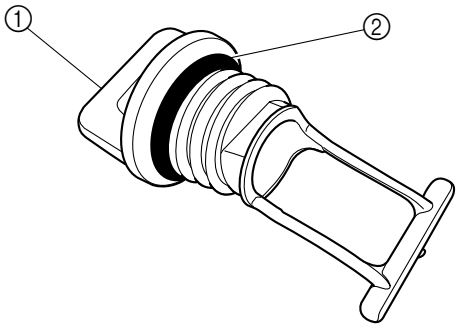

Spout installation

1. Install the spout ①, and then tighten the nut ② to the specified torque.

2. Install the hose ③, and then tighten the clamp ④ to the specified torque.

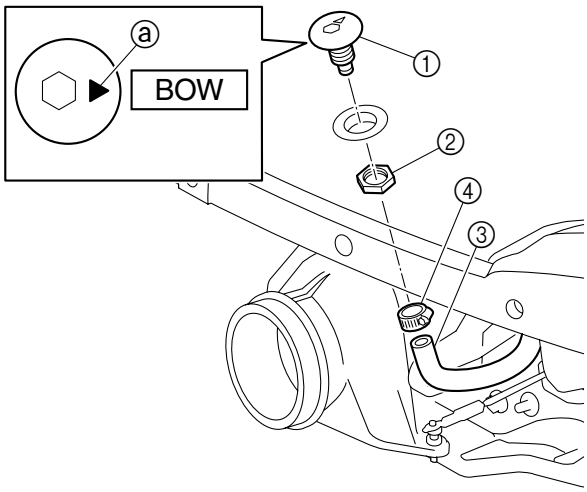

Spout nut ②: 5 N·m (0.5 kgf·m, 3.7 ft·lb) Spout hose clamp ④: 2 N·m (0.2 kgf·m, 1.5 ft·lb)

TIP:

Face the mark ⓐ toward the bow.

Reboarding step assy. installation (VX Cruiser)

1. Fasten the brackets on both sides of the reboarding step in the down position with plastic ties ① so that they will not return to the up position.

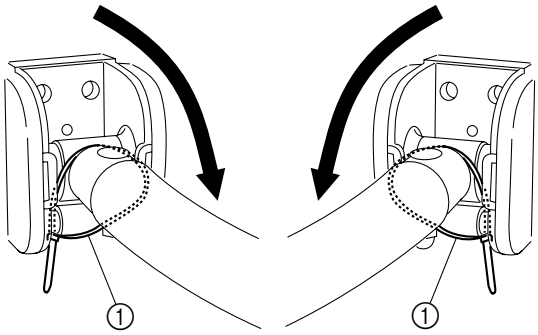

2. Install the reboarding step assy. ②, and then tighten the bolts ③ to the specified torque.

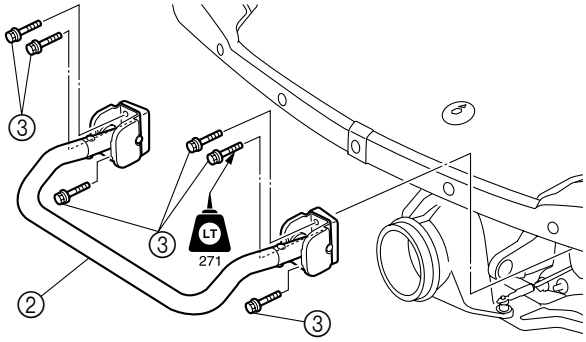

Reboarding step assy. bolt ③: 15 N·m (1.5 kgf·m, 11.1 ft·lb)

Troubleshooting

YDIS

Introduction

Feature

The newly developed YDIS provides quicker detection and analysis of engine malfunctions.
By connecting your computer to the ECM of a watercraft using the communication cable, this software can be used to display sensor data and data stored in the ECM on a computer's monitor.
If this software is run on Microsoft Windows® 2000, Windows XP, or Windows Vista (for Ver. 1.32), the information can be displayed in colorful graphics. Also, the software can be operated using either a mouse or a keyboard.
In addition, the data for the main functions (Diagnosis, Diagnosis record, Engine monitor, Data logger, and Record of engine oil exchange) can be saved on a disk or printed out.

TIP:
Make sure to use YDIS (Ver. 1.30 or Ver. 1.32) with this model.

Function

Scan tool

1. **Diagnosis:** Each sensor's status and each ECM diagnostic code or item is displayed. This enables you to find malfunctioning parts and controls quickly. The diagnostic codes displayed are the same as those described in "Diagnostic code and checking step" in this chapter.

2. **Diagnosis record:** Sensors that had been activated and ECM diagnostic codes that have been recorded are displayed. This allows you to check the watercraft's record of malfunctions. The diagnostic codes displayed are the same as those described in "Diagnostic code and checking step" in this chapter.

3. **Engine monitor:** Each sensor status and the ECM data are displayed. This enables you to find malfunctioning parts quickly. In addition, the data displayed using the Engine monitor function can be displayed in a graph.

Items: VX Sport, VX Cruiser, and VX Deluxe

Engine speed	Ignition timing	Oil press switch (*9)
Intake pressure (*1)	Battery voltage (12-16)	Engine start switch
Throttle position sensor 1 (*2)	Fuel injection duration	Steering sensor
Throttle valve opening (0-90)	Engine temperature	Main relay (*10)
Throttle position sensor 2 (*3)	Intake temperature (*6)	ETV relay
Accelerator position sensor 1 (*4)	Engine stop lanyard switch (*7)	Fuel pump relay (*10)
Accelerator position sensor 2 (*5)	Overheat thermoswitch (*8)	
Atmospheric pressure	Slant detection switch	

(*1): Intake air pressure
(*2): TPS 1
(*3): TPS 2
(*4): APS 1
(*5): APS 2
(*6): Intake air temperature
(*7): Engine shut-off switch
(*8): Thermoswitch (engine) and thermoswitch (exhaust)
(*9): Oil pressure switch
(*10): Main and fuel pump relay

4. **Stationary test:** Operation tests can be performed with the engine off.

Items: VX Sport, VX Cruiser, and VX Deluxe

Ignite ignition coil (#1–#4)	Operate injector (#1–#4)	Operate electric fuel pump (*1)

(*1): Operate fuel pump module

5. **Active test:** With the engine running, each cylinder is dropped and the engine speed is checked for changes to determine if the cylinder is malfunctioning. These tests can be performed quickly.

6. **Data logger:** From the data stored in the ECM, no more than 2 items of 78 seconds of recorded data are displayed on a graph. In addition, the operating time as compared to the engine speed and the total operating time are displayed. This allows you to check the operating status of the engine. You can also save the ECM record data in a file so that you can read and display the graph later.

Items: VX Sport, VX Cruiser, and VX Deluxe

Engine speed	Throttle position sensor	Intake pressure (*1)
Battery voltage (12–16)	Engine temperature	Oil press switch (*2)

(*1): Intake air pressure
(*2): Oil pressure switch

7. **ECM record data graph:** When a malfunction occurs in the engine control system, 4 seconds (2 seconds before and after the malfunction) of recorded data is saved in the ECM. This data can be displayed on a graph using the "ECM record data graph" of the Data logger function.
When the communication cable is used to connect a computer to the ECM, the ECM record data can be saved and viewed on the computer.
The saved ECM record data can also be viewed offline.

Items: VX Sport, VX Cruiser, and VX Deluxe

Engine speed	Target TPS voltage (*6)	Low-RPM mode
Accelerator position sensor 1 (*1)	Ref. TPS voltage (*7)	Engine stop lanyard switch (*11)
Accelerator position sensor 2 (*2)	Ref. acc. pos. sensor voltage (*8)	Main relay (*12)
Steering sensor	Target TPS voltage for ISC (*9)	ETV relay
Throttle position sensor 1 (*3)	Engine stop mode	Overheat thermoswitch (*13)
Throttle position sensor 2 (*4)	Engine start mode	Oil press switch (*14)
Intake pressure (*5)	Engine stop mode with SW (*10)	Warning
Battery voltage	OTS mode	ETV limit

(*1): APS 1
(*2): APS 2
(*3): TPS 1
(*4): TPS 2
(*5): Intake air pressure
(*6): Target TPS voltage
This item shows the target output voltage of the TPS.
This value is the control voltage that the ECM requires to set the target opening angle of the throttle valve.
(*7): Reference TPS voltage
This item shows the criterion output voltage of the TPS.
This value is used to detect the TPS output voltage during engine operation.
(*8): Reference APS voltage
This item shows the criterion output voltage of the APS.
This value is used to detect the APS output voltage when the throttle lever is opened.
(*9): Target TPS voltage for Idle Speed Control
ECM controls the engine idle speed by using the throttle valve attached to the TPS.
This target voltage is used by the ECM to achieve the target opening angle of the throttle valve at the engine idle speed.
(*10): Engine stop mode with switch
(*11): Engine shut-off switch
(*12): Main and fuel pump relay
(*13): Thermoswitch (engine) and thermoswitch (exhaust)
(*14): Oil pressure switch

TIP:
To display the data and graphs, see the YDIS (Ver. 1.30 or Ver. 1.32) Instruction Manual.

8. **Some files:** Other applications can be selected and run while continuing to run the diagnostic program.

Contents

① CD-ROM (software + instruction manual)
② Adapter
③ Communication cable

① ② ③

Operating

Connecting the communication cable to the watercraft

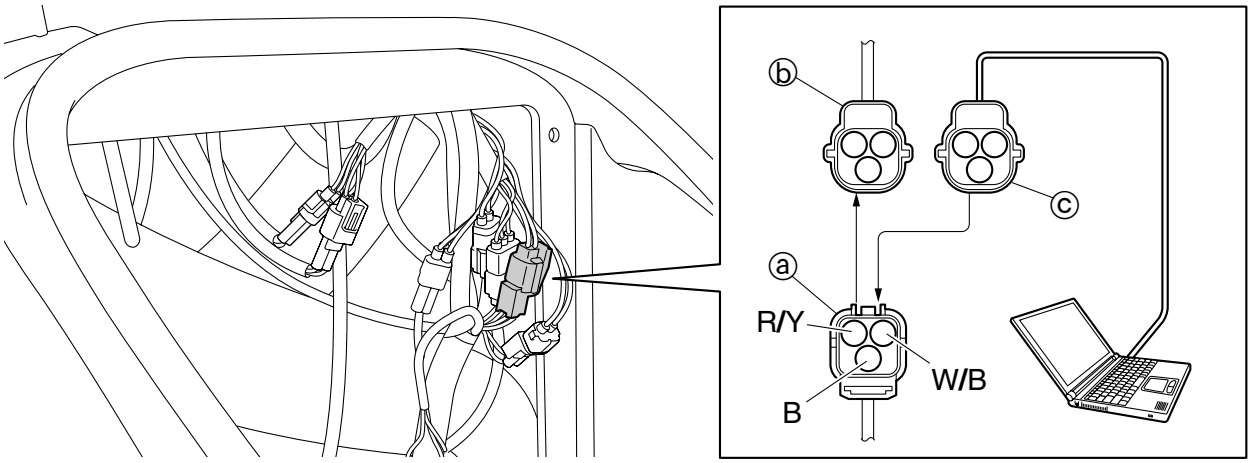

ⓐ Wiring harness coupler
ⓑ Meter coupler
ⓒ Communication cable coupler

TIP:

Be careful not to pinch the communication cable between the front hood and the deck or to damage it.

Engine unit troubleshooting

TIP:

- Before troubleshooting the engine unit, make sure that fresh fuel of the specified type has been used.
- Check that all wiring connections are properly secured and that they are not rusty or corroded.
- Check that the engine shut-off cord is connected to the engine shut-off switch.
- Check that the battery is charged and that its specific gravity is within specification.
- Check the diagnostic code using the YDIS (or self-diagnosis) first, and then check the electronic control system by following the diagnostic code chart.
- The multifunction meter cannot display more than 1 diagnostic code. Even if multiple diagnostic codes are present, only 1 will be displayed.
- When a three-digit diagnostic code is detected, check the data logger of the “ECM record data graph” as well.
- Using the YDIS is recommended because self-diagnosis may be insufficient for proper troubleshooting of the ETV system (throttle body assy., TPS, and APS).
- If a diagnostic code is not detected, check the engine unit according to “Engine unit troubleshooting (diagnostic code not detected).”
- When deleting the diagnosis record on the YDIS, make sure to check the time that the diagnostic codes were detected.
- When checking the input voltage of a part, the coupler or connector must be disconnected. As a result, the ECM determines that the part is disconnected and a diagnostic code is detected. Therefore, make sure to delete the diagnosis record after checking the input voltage.

Using the YDIS for engine unit troubleshooting

TIP:

- Use the diagnostic codes displayed by the YDIS to check each part according to the “Diagnostic code and checking step” table.
- Delete the diagnostic codes after checking, repairing, or replacing a part, and check that the diagnostic codes are not detected again. If the same diagnostic codes are detected, the ECM may be faulty.
- Check the items listed in the table, if all the items are in good condition, delete the diagnostic code, and then check the diagnostic codes again. If the same diagnostic codes are detected again, the ECM is faulty.
- A breakdown of the engine symptoms are described in the “Diagnostic code table”, however, multiple malfunctions that have been duplicated cannot be limited to these items. The symptoms may change according to the operating conditions and other conditions.

Self-diagnosis

With the engine running, push the select button ⓐ for approximately 8 seconds and check if a diagnostic code ⓑ is indicated on the multifunction meter.

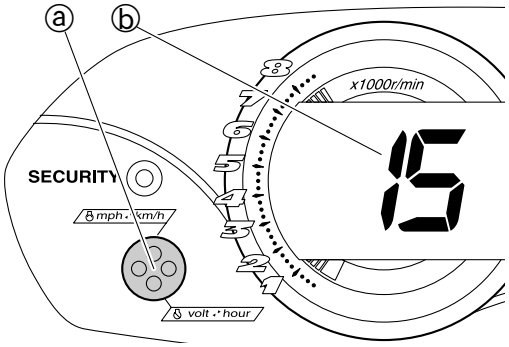

TIP:

Because the multifunction meter cannot display more than 1 diagnostic code even if there are multiple diagnostic codes, using the YDIS is recommended.

Diagnostic code table

Code No.	Symptom	Diagnostic code output		
		Multifunction meter	YDIS	
			Diagnosis	Diagnosis record
01	Normal	○	—	—
13	Pulser coil (*1) malfunction	○	○	○
15	Engine temp sensor (*2) malfunction	○	○	○
19	Battery voltage malfunction	○	○	○
23	Intake temp sensor (*3) malfunction	○	○	○
24	Cam position sensor malfunction	○	○	○
29	Intake press sensor (*4) malfunction	○	○	○
47	Slant detection switch malfunction	○	○	○
55	Steering sensor malfunction	○	○	○
112, 113, 114, 115, 116, 117, 118, 119, 121, 122, 123, 129, 136, 137, 138, 139, 141, 142, 143, 144, 145	Electronic throttle system malfunction	○	○	○
124, 125, 126, 127, 128	Throttle position sensor malfunction	○	○	○
131, 132, 133, 134, 135	Accelerator position sensor malfunction	○	○	○
252	Overheat warning	—	—	○
253	Low oil pressure warning	—	—	○

(*1): Pickup coil
(*2): Engine temperature sensor
(*3): Sensor assy. (intake air temperature)
(*4): Sensor assy. (intake air pressure)

Diagnostic code and checking step

Diagnostic code	Item	Symptom	Checking steps	See page
13	Pulser coil (*1) malfunction	Engine will not start	1. Measure the pickup coil output peak voltage.	7-10
			2. Measure the pickup coil resistance.	7-11
			3. Check the white/black (W/B) and black/orange (B/O) pickup coil wiring harness leads for continuity.	WD
15	Engine temp sensor (*2) malfunction	Trolling speed is unstable (*3)	1. Check the engine temperature using the YDIS.	9-1
			2. Measure the engine temperature sensor input voltage.	7-16
			3. Check the black/yellow (B/Y) and black/orange (B/O) engine temperature sensor wiring harness leads for continuity.	WD
			4. Measure the engine temperature sensor resistance.	7-17
19	Battery voltage malfunction	Trolling speed is unstable (*3)	1. Check the battery voltage using the YDIS.	9-1
			2. Check the fuse for continuity.	7-28
			3. Measure the stator coil output peak voltage.	7-11
			4. Measure the rectifier regulator output peak voltage.	7-12
			5. Check the battery cables and terminals for proper connection.	8-26
23	Intake temp sensor (*4) malfunction	Trolling speed is unstable (*3)	1. Check the intake air temperature using the YDIS.	7-17
			2. Measure the sensor assy. input voltage.	7-17
			3. Check the black/yellow (B/Y) and black/orange (B/O) sensor assy. wiring harness leads for continuity.	WD
			4. Measure the sensor assy. resistance.	7-17

(*1): Pickup coil
(*2): Engine temperature sensor
(*3): This symptom may only be exhibited in certain environmental conditions.
(*4): Sensor assy. (intake air temperature)
WD: See the wiring diagram.

Diagnostic code	Item	Symptom	Checking steps	See page
24	Cam position sensor malfunction	Engine speed is limited	1. Measure the cam position sensor input voltage.	7-23
			2. Check the orange (O), green/orange (G/O), and black/orange (B/O) cam position sensor wiring harness leads for continuity.	WD
			3. Measure the cam position sensor output voltage.	7-24
29	Intake press sensor (*1) malfunction	Engine stalls Trolling speed is unstable (*2)	1. Check the intake air pressure using the YDIS.	7-17
			2. Measure the sensor assy. input voltage.	7-17
			3. Check the orange (O), pink/green (P/G), and black/orange (B/O) sensor assy. wiring harness leads for continuity.	WD
47	Slant detection switch malfunction	Normal operation	1. Check the slant detection switch operation using the YDIS.	9-1
			2. Measure the slant detection switch input voltage.	7-24
			3. Check the blue/black (L/B) and black/orange (B/O) slant detection switch wiring harness leads for continuity.	WD
			4. Check the slant detection switch continuity.	7-24
55	Steering sensor malfunction	Normal operation	1. Check the steering sensor operation using the YDIS.	7-25
			2. Measure the steering sensor input voltage.	7-25
			3. Check the orange/red (O/R), white/blue (W/L), and black/orange (B/O) steering sensor wiring harness leads for continuity.	WD

(*1): Sensor assy. (intake air pressure)
(*2): This symptom may only be exhibited in certain environmental conditions.
WD: See the wiring diagram.

Diagnostic code	Item	Symptom	Checking steps	See page
112 113 114	Electronic throttle system (*1) malfunction	Engine speed is limited	1. Check the TPS output voltage and throttle valve opening using the YDIS.	7-18
			2. Check the ECM circuit for continuity.	7-26
			3. Check the ETV relay for continuity.	7-23
			4. Check the charging system. • Stator coil output peak voltage • Stator coil resistance • Rectifier regulator output peak voltage • Rectifier regulator continuity	 7-11 7-12 7-12 7-13
			5. Check the fuse for continuity.	7-28
			6. Check the battery voltage and specific gravity.	3-13
			7. Check the red (R) and black (B) power supply circuit cables and leads for continuity.	WD
115 116	Electronic throttle system (*1) malfunction	Engine speed is limited	1. Check the pink (P), orange (O), pink/black (P/B), and black/orange (B/O) throttle body assy. wiring harness leads for continuity.	WD
			2. Check the TPS output voltage and throttle valve opening using the YDIS.	7-18
			3. Check the throttle shaft and throttle inner surface for wear or damage.	4-15
117 118 119	Electronic throttle system (*1) malfunction	Engine speed is limited	1. Check the throttle body assy. coupler terminals for rust and corrosion.	4-10
			2. Check the green (G) and blue (L) throttle body assy. wiring harness leads for continuity.	WD
			3. Check the ECM circuit for continuity.	7-26
121	Electronic throttle system (*1) malfunction	Engine speed is limited	1. Cross-check the ECM or replace.	—
122	Electronic throttle system (*1) malfunction	Engine speed is limited	1. Cross-check the throttle body assy.	—
123	Electronic throttle system (*1) malfunction	Engine speed is limited	1. Check the ETV relay and fuse (ETV relay) for continuity.	7-23 7-28
			2. Check the ECM circuit for continuity.	7-26

(*1): Throttle body assy.
WD: See the wiring diagram.

Diagnostic code	Item	Symptom	Checking steps	See page
124 125 127 128	Throttle position sensor malfunction	Engine speed is limited	1. Check the pink (P), orange (O), pink/black (P/B), and black/orange (B/O) throttle body assy. wiring harness leads for continuity.	WD
			2. Check the ECM circuit for continuity.	7-26
126	Throttle position sensor malfunction	Engine speed is limited	1. Check the TPS output voltage using the YDIS.	7-18
			2. Check the ECM circuit for continuity.	7-26
129	Electronic throttle system (*1) malfunction	Engine speed is limited	1. Check the TPS output voltage using the YDIS.	7-18
			2. Check the ETV relay and fuse (ETV relay) for continuity.	7-23 7-28
131 132 133 134	Accelerator position sensor malfunction	Engine speed is limited	1. Check the APS output voltage using the YDIS.	7-20
			2. Check the APS circuit for continuity.	7-22
			3. Measure the APS 1 and 2 resistance.	7-21
135	Accelerator position sensor malfunction	Engine speed is limited	1. Measure the APS 1 and 2 resistance.	7-21
			2. Check the APS circuit for continuity.	7-22
136 137 138 139	Electronic throttle system (*1) malfunction	Engine speed is limited	1. Check the ECM circuit for continuity.	7-22
			2. Check the ETV relay for continuity.	7-23
			3. Check the charging system. • Stator coil output peak voltage • Stator coil resistance • Rectifier regulator output peak voltage • Rectifier regulator continuity	 7-11 7-12 7-12 7-13
			4. Check the fuse for continuity.	7-28
			5. Check the battery voltage and specific gravity.	3-13
			6. Check the red (R) and black (B) power supply circuit cables and leads for continuity.	WD
141	Electronic throttle system (*1) malfunction	Engine speed is limited	1. Check the ECM circuit for continuity.	7-26
			2. Check the ETV relay and fuse (ETV relay) for continuity.	7-23 7-29
142	Electronic throttle system (*1) malfunction	Engine speed is limited	1. Check the TPS output voltage and throttle valve opening using the YDIS.	7-18
			2. Check the throttle shaft and throttle inner surface for wear or damage.	4-15

(*1): Throttle body assy.
WD: See the wiring diagram.

Diagnostic code	Item	Symptom	Checking steps	See page
143 144	Electronic throttle system (*1) malfunction	Engine speed is limited	1. Check the ECM circuit for continuity.	7-22
			2. Check the ETV relay for continuity.	7-23
			3. Check the charging system. • Stator coil output peak voltage • Stator coil resistance • Rectifier regulator output peak voltage • Rectifier regulator continuity	 7-11 7-12 7-12 7-13
			4. Check the fuse for continuity.	7-28
			5. Check the battery voltage and specific gravity.	3-13
			6. Check the red (R) and black (B) power supply circuit cables and leads for continuity.	WD
145	Electronic throttle system (*1) malfunction	Engine speed is limited	1. Check the ETV relay and fuse (ETV relay) for continuity.	7-23 7-28
			2. Check the throttle shaft and throttle inner surface for wear or damage.	4-15
252	Overheat warning	Engine speed is limited	1. Check the cooling water passages for obstructions.	2-18
			2. Measure the engine temperature sensor resistance.	7-17
			3. Check that there is no short circuit between the black/yellow (B/Y) and black/orange (B/O) engine temperature sensor wiring harness leads (*2).	WD
			4. Check the thermoswitch (engine) for continuity.	7-15
			5. Check that there is no short circuit between the pink (P) and black (B) thermoswitch (engine) wiring harness leads (*2).	WD
			6. Check the thermoswitch (exhaust) for continuity.	7-16
			7. Check that there is no short circuit between the pink (P) and black (B) thermoswitch (exhaust) wiring harness leads (*2).	WD

(*1): Throttle body assy.
(*2): Disconnect the sensor coupler or switch coupler, and then check that there is no short circuit at the coupler (wiring harness end).
WD: See the wiring diagram.

Diagnostic code	Item	Symptom	Checking steps	See page
253	Low oil pressure warning	Engine speed is limited	1. Check the oil pressure switch for continuity.	7-14
			2. Check that there is no short circuit in the pink/white (P/W) oil pressure switch wiring harness lead (*1).	WD
			3. Check the oil passages for obstructions.	2-17

(*1): Disconnect the sensor coupler or switch coupler, and then check that there is no short circuit at the coupler (wiring harness end).
WD: See the wiring diagram.

Engine unit troubleshooting (diagnostic code not detected)

Troubleshooting when diagnostic codes are not available consists of the following 3 items.
Symptom 1: Specific trouble conditions
Symptom 2: Trouble conditions of an area or individual part
Cause: The content considered as the trouble factors for symptom 2
—: Not applicable

Symptom 1: Engine does not crank.

Symptom 2	Cause	Checking step	See page
Starter motor does not operate	Yamaha Security System set to lock mode (*1)	Check that the Yamaha Security System is set to the unlock mode.	7-36
	Discharged battery	Check the battery voltage and specific gravity.	3-13
	Loose connection of battery terminal	Check the battery cable and terminal for proper connection.	8-26
	Blown fuse	Check the fuse for continuity.	7-28
	Starter relay malfunction	Check the starter relay.	7-30
	Engine start switch malfunction	Check the engine start switch. (left handlebar switch)	7-29
	Short, open, or loose connection in starter motor circuit	Measure the starter relay input voltage.	7-30
		Check the wiring harness.	WD
	Starter motor malfunction	Disassemble and check the starter motor.	7-32
	Stuck piston or crankshaft	Disassemble and check the engine unit.	5-94
	Stuck impeller	Disassemble and check the jet pump unit.	6-8
Starter motor operates, but the engine does not crank	Idle gear or starter clutch malfunction	Check the idle gear, starter clutch, or crankshaft Woodruff key.	5-86

(*1): VX Cruiser and VX Deluxe
WD: See the wiring diagram.

Symptom 1: Engine will not start (engine cranks).

Symptom 2	Cause	Checking step	See page
Throttle valve does not move properly	Throttle lever squeezed	Check that the throttle lever is in the fully closed position.	—
	Throttle cable installed incorrectly	Adjust the throttle lever free play.	3-2
	APS mulfunction	Measure the APS 1 and 2 resistance.	7-21
	TPS mulfunction	Check the throttle valve opening.	7-18
	Throttle valve malfunction	Check the throttle body assy.	4-15
Discharged battery	Battery performance decrease	Check the battery voltage and specific gravity.	3-13
	Stator coil malfunction	Check the stator coil assy.	7-11
	Short, open, or loose connection in charging circuit	Check the battery cable and terminal for proper connection.	8-26
		Check the wiring harness.	WD
ECM does not operate	Blown fuse	Check the fuse for continuity.	7-28
	Main and fuel pump relay malfunction	Check the main and fuel pump relay.	7-29
	Short, open, or loose connection in ECM circuit	Measure the ECM input voltage.	7-26
		Check the ECM circuit for continuity.	7-26
	ECM malfunction	Replace the ECM.	—
Spark plug does not spark (all cylinders)	Engine shut-off cord clip not installed	Check that the engine shut-off cord clip is installed properly.	7-29
	Engine stop switch malfunction	Check the engine stop switch continuity. (left handlebar switch)	7-29
	Pickup coil malfunction	Measure the pickup coil output peak voltage.	7-10
		Measure the pickup coil resistance.	7-11
	Short, open, or loose connection in pickup coil circuit	Check the white/black (W/B) and black/orange (B/O) pickup coil wiring harness leads for continuity.	WD
	Short, open, or loose connection in ignition coil circuit	Measure the ignition coil input voltage (from the battery).	7-9
		Check the red/yellow (R/Y), black/red (B/R), black/white (B/W), black/yellow (B/Y), and black/green (B/G) ignition coil wiring harness leads for continuity.	WD
	ECM malfunction	Measure the ECM output peak voltage.	7-9

WD: See the wiring diagram.

Symptom 2	Cause	Checking step	See page
Fuel not supplied (all cylinders)	Fuel leakage	Check the fuel hose.	3-5
	Blown fuse	Check the fuse for continuity.	7-28
	Clogged fuel pump filter	Clean the fuel pump filter.	4-4
	Fuel pump module malfunction	Check the fuel pump module operation sound using the YDIS.	7-28
		Measure the fuel pump module input voltage.	7-28
		Check the blue (L) and black (B) fuel pump module wiring harness leads for continuity.	WD
		Measure the fuel pressure.	4-9
	Main and fuel pump relay malfunction	Check the main and fuel pump relay.	7-29
Compression pressure is low	Compression leakage	Measure the compression pressure.	3-7
		Measure the valve clearance.	3-8
		Check the camshaft for damage.	5-62
		Check the cylinder head gasket and cylinder head warpage.	5-77
		Check the valve and valve seat for wear.	5-80
		Check the piston and piston ring for damage.	5-99 5-99
		Check the cylinder for damage.	5-100
	Improper valve timing	Check the timing chain.	5-98

WD: See the wiring diagram.

Symptom 1: Unstable engine idle speed, poor acceleration, poor performance, or limited engine speed

Symptom 2	Cause	Checking step	See page
Throttle valve does not move properly	Throttle cable installed incorrectly	Adjust the throttle lever free play.	3-2
	Throttle valve malfunction	Check the throttle body assy.	4-15
Spark plug does not spark (some cylinders)	Spark plug malfunction	Check the spark plug.	3-6
	Ignition coil malfunction	Check the ignition spark.	7-9
	Short, open, or loose connection in ignition coil circuit	Measure the ignition coil input voltage (from the battery).	7-9
		Check the red/yellow (R/Y), black/red (B/R), black/white (B/W), black/yellow (B/Y), and black/green (B/G) ignition coil wiring harness leads for continuity.	WD
	ECM malfunction	Measure the ECM output peak voltage.	7-9
Fuel not supplied (some cylinders)	Fuel injector malfunction	Check the fuel injector operation sound using the YDIS.	7-27
		Measure the fuel injector resistance.	7-27
		Check the fuel injector O-ring.	4-1
	Short, open, or loose connection in fuel injector circuit	Measure the fuel injector input voltage.	7-27
		Check the red/yellow (R/Y), purple/red (Pu/R), purple/black (Pu/B), purple/yellow (Pu/Y), and purple/green (Pu/G) fuel injector wiring harness leads for continuity.	WD
	Clogged fuel injector filter	Clean the fuel injector.	4-6
	ECM malfunction	Replace the ECM.	—
Compression pressure is low	Compression leakage	Measure the compression pressure.	3-7
		Measure the valve clearance.	3-8
		Check the camshaft for damage.	5-62
		Check the cylinder head gasket and cylinder head warpage.	5-77
		Check the valve and valve seat for wear.	5-80
		Check the piston and piston ring for damage.	5-99 5-99
		Check the cylinder for damage.	5-100
	Improper valve timing	Check the timing chain.	5-98

WD: See the wiring diagram.

Symptom 1: High engine idle speed

Symptom 2	Cause	Checking step	See page
—	Throttle cable installed incorrectly	Adjust the throttle lever free play and check the cable rooting.	3-2

Symptom 1: Limited engine speed

Symptom 2	Cause	Checking step	See page
• Buzzer sounds intermittently • Overheat warning indicator blinks • Check engine warning indicator blinks	Clogged cooling water passage	Check the cooling water pilot outlet for water discharge.	—
		Check the cooling water passage.	2-18
• Buzzer sounds intermittently • Oil pressure warning indicator blinks	Insufficient engine oil	Check the engine oil level.	3-9
		Check for engine oil leakage.	2-17
		Check the oil passage.	2-17
	Oil pressure switch malfunction	Check the oil pressure switch continuity.	7-14
		Check that there is no short circuit in the pink/white (P/W) oil pressure switch wiring harness lead.	WD
—	APS malfunction	Check the APS.	3-2 7-20
	TPS malfunction	Check the throttle body assy.	4-15 7-18

WD: See the wiring diagram.

Symptom 1: Discharged battery

Symptom 2	Cause	Checking step	See page
—	Battery performance decrease	Check the battery voltage and specific gravity.	3-13
	Loose connection of battery terminal	Check the battery cable and terminal for proper connection.	8-26
	Short, open, or loose connection in charging circuit	Check the charging circuit for wiring connection and damage.	WD
	Stator coil malfunction	Check the stator coil assy.	7-11
	Rectifier regulator malfunction	Measure the rectifier regulator output peak voltage.	7-12

WD: See the wiring diagram.

Symptom 1: Poor performance

Symptom 2	Cause	Checking step	See page
Watercraft cannot reach high speeds	Jet pump unit malfunction	Check the impeller, impeller duct, and intake grate.	6-8
	Water entered hull	Check the drain plugs and O-rings for damage.	8-33
		Check the cooling water hoses for damage.	2-18
		Check the water lock, water tank, and rubber hoses for damage.	8-28
		Check the exterior of the hull for damage.	—

Appendix

A

Wiring diagram

How to use the wiring diagram

Composition of the wiring diagrams

The wiring diagram consists of 2 sheets. One is for VX Sport, the other for VX Cruiser and VX Deluxe.

Legend symbols in the wiring diagrams

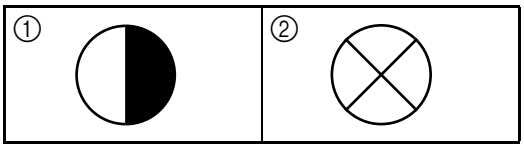

① Double colors wire
② No wire connector

Color code

B	: Black	B/L	: Black/Blue	L/Y	: Blue/Yellow
Br	: Brown	Gy	: Gray	G/L	: Green/Blue
G	: Green	B/W	: Black/White	P/W	: Pink/White
L	: Blue	B/Y	: Black/Yellow	Pu/B	: Purple/Black
O	: Orange	G/O	: Green/Orange	Pu/G	: Purple/Green
P	: Pink	L/B	: Blue/Black	Pu/R	: Purple/Red
R	: Red	L/R	: Blue/Red	Pu/Y	: Purple/Yellow
W	: White	O/R	: Orange/Red	R/Y	: Red/Yellow
Y	: Yellow	O/W	: Orange/White	W/B	: White/Black
B/G	: Black/Green	P/B	: Pink/Black	W/L	: White/Blue
B/O	: Black/Orange	P/G	: Pink/Green	Y/G	: Yellow/Green
B/R	: Black/Red	P/R	: Pink/Red	Y/W	: Yellow/White

A To entry box
B Antenna
C Nonuse

YAMAHA MOTOR CORPORATION, U.S.A.

Printed in U.S.A.
Jan. 2010 – ** × 1 CR
(E)

VX Sport

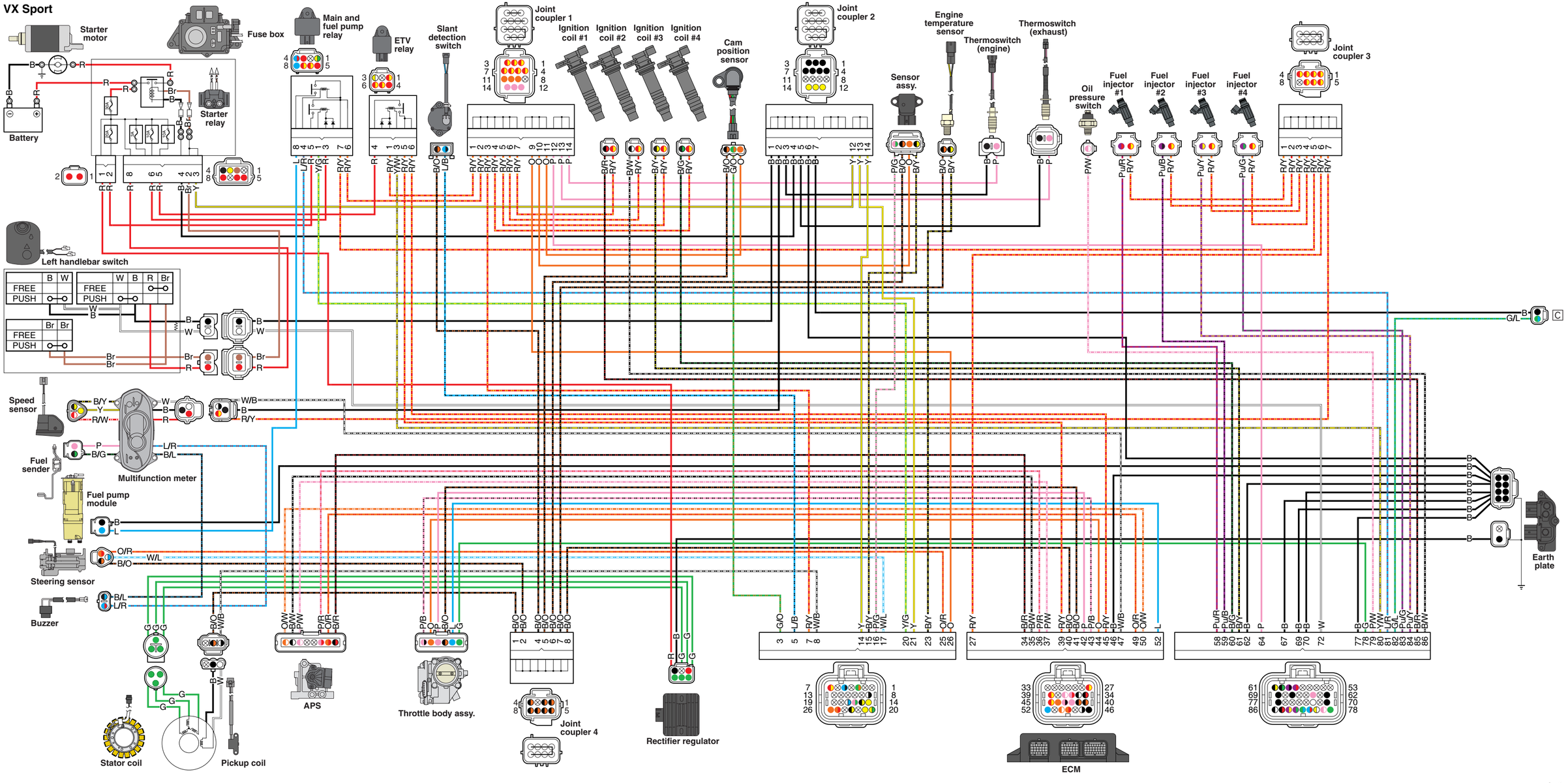
Starter motor
Battery
Starter relay
Fuse box
Main and fuel pump relay
ETV relay
Slant detection switch
Joint coupler 1
Ignition coil #1
Ignition coil #2
Ignition coil #3
Ignition coil #4
Cam position sensor
Joint coupler 2
Sensor assy.
Engine temperature sensor
Thermoswitch (engine)
Thermoswitch (exhaust)
Oil pressure switch
Fuel injector #1
Fuel injector #2
Fuel injector #3
Fuel injector #4
Joint coupler 3
Left handlebar switch
FREE
PUSH
Speed sensor
Fuel sender
Multifunction meter
Fuel pump module
Steering sensor
Buzzer
Earth plate
Stator coil
Pickup coil
APS
Throttle body assy.
Joint coupler 4
Rectifier regulator
ECM

VX Cruiser and VX Deluxe